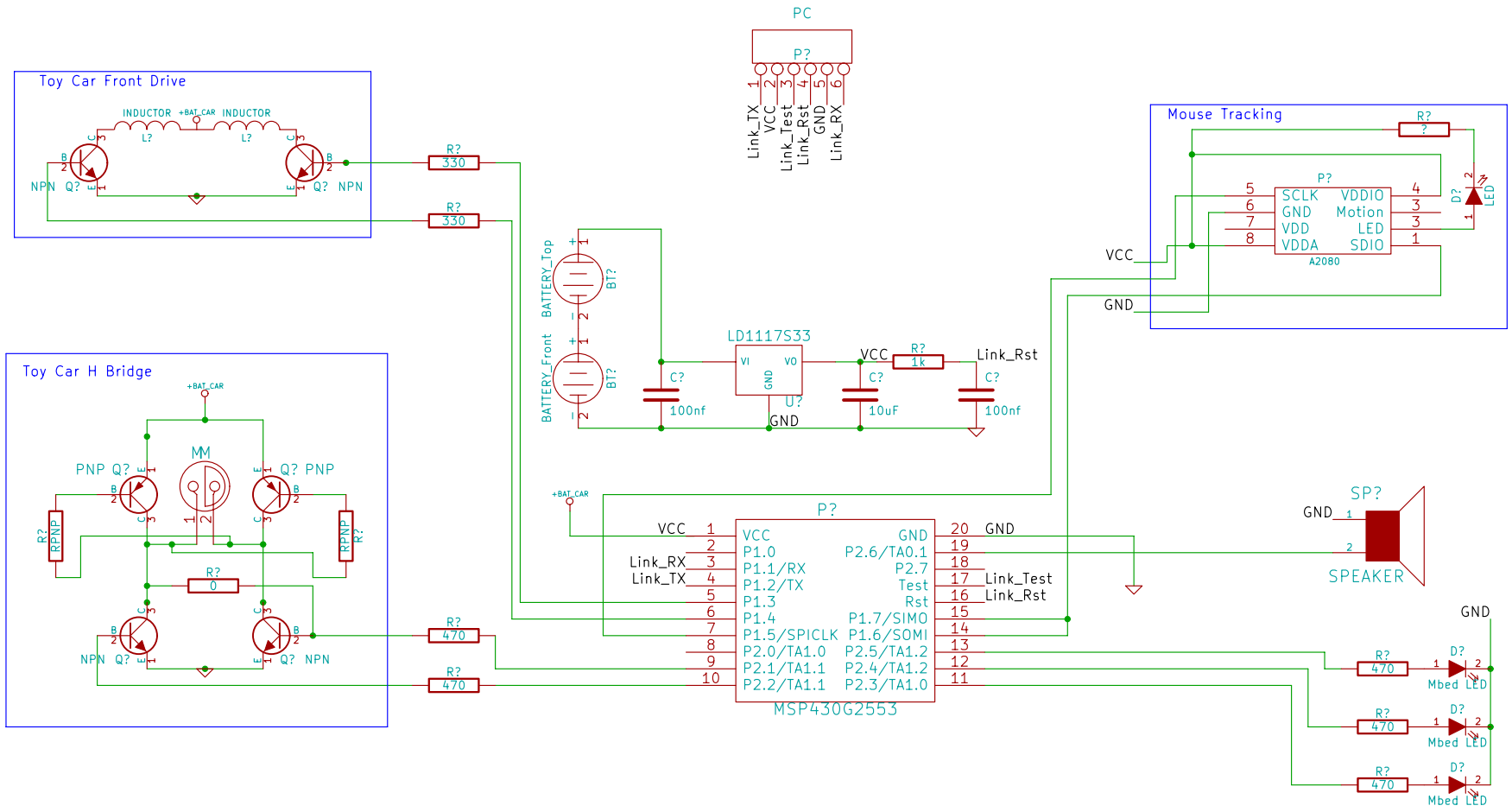

File: ToyCarProject.sch		
Sheet: /		
Title:		
Size: A4	**Date: 18 mar 2013**	**Rev:**
KiCad E.D.A.		Id: 1/1