GATEWAY 270

ADVANCED COMMUNICATION COMPUTING PLATFORM FOR MOBILE EQUIPMENT APPLICATIONS

DESCRIPTION

The Gateway 270 is a lightweight and affordable computing platform that can provide a wide range of communications technologies: Wi-Fi, Bluetooth, Ethernet, BroadR-Reach, 4G LTE with 3G/2G fallback, GPS, and controller-area networking (CAN).

Gateway 270 is built with an IP67-rated rugged enclosure for use outdoors and for mounting on heavy machinery. A software development kit (SDK) is available for simplified custom application development.

FEATURES

- 6x CAN bus
- Digital I/O
- RS232 serial
- 802.11 B/G/N Wi-Fi
- Bluetooth V4.0
- Global LTE CAT 4 cellular radio with 2G/3G fallback
- GPS
- Dual-core ARM Cortex A9
- 4 GB eMMC standard storage
- 512 MB DDR3L RAM
- Yocto Linux with Docker support
- Low power mode
- Trusted platform module
- Secure boot support
- 100BASE-T1 BroadR-Reach
- 100BASE-TX 10/100 Ethernet
- Supported software tools: Microsoft .NET Core, C/C++, Python, Rust, Google Go (GoLang)
- Azure & AWS integration support
- Accelerometer and wake on movement
- Optional gyroscope

APPLICATIONS

- Machine control
- Telematics
- Mobile app / machine integration

REGULATORY & NETWORK CERTIFICATION

- Tata*
- Vodafone International
- European Economic Area (CE)
- USA (FCC)
- Canada (IC)
- Brazil (ANATEL)
- Argentina (ENACOM)
- Chile (SUBTEL)
- Columbia (CRC)
- Suriname (TAS)
- Uruguay (URSEC)
- Peru (MTC)
- Bolivia*
- Guyana*

*Pending

INPUT / OUTPUT

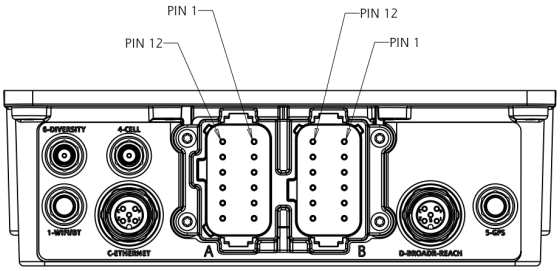

Connector	Function
SMA 1	Bluetooth/Wi-Fi
SMA 4	Cellular Main
SMA 5	GPS
SMA 6	Cellular Diversity
M12 C	Ethernet
M12 D	BroadR-Reach

Connector: Pin	Function
DT A:1	Vehicle Battery Power (12V nominal)
DT A:2	Power Ground
DT A:3	Digital Input Signal
DT A:4	Digital Input Signal
DT A:5	CANBus 2 High
DT A:6	CANBus 1 High
DT A:7	CANBus 1 Low
DT A:8	CANBus 2 Low
DT A:9	Digital Output Signal (12V nominal)
DT A:10	Digital Output Signal (12V nominal)
DT A:11	Digital Output Signal (12V nominal)
DT A:12	Key Switch
DT B:1	RS-232 Serial Port Transmit
DT B:2	Unused
DT B:3	CANBus 6 High
DT B:4	CANBus 5 High
DT B:5	CANBus 4 High
DT B:6	CANBus 3 High
DT B:7	CANBus 3 Low
DT B:8	CANBus 4 Low
DT B:9	CANBus 5 Low
DT B:10	CANBus 6 Low
DT B:11	RS-232 Serial Port Ground, 750-mA fused
DT B:12	RS-232 Serial Port Receive
M12 C:1	Ethernet Positive (+) Transmit Terminal
M12 C:2	Ethernet Positive (+) Receive Terminal
M12 C:3	Ethernet Negative (-) Transmit Terminal
M12 C:4	Ethernet Negative (-) Receive Terminal
M12 CSH:1	Shield (Ground) Connection
M12 D:1	No Connect
M12 D:2	BroadR-Reach Positive (+) Terminal for Transmit/Receive
M12 D:3	No Connect
M12 D:4	BroadR-Reach Negative (-) Terminal for Transmit/Receive
M12 DSH:1	BroadR-Reach Shield (Ground) Connection

ABSOLUTE MAXIMUM RATINGS

Stresses beyond those listed under Absolute Maximum Ratings may cause permanent damage to the device. Exposure to any Absolute Maximum Rating conditions for extended periods may affect device reliability and lifetime.

Parameter	Value	Unit
POWER_UNSWITCHED to GND	-13.6 to 26.5	V
CANx_HIGH, CANx_LOW to GND	- 0.3 to 16.5	V
CANx_HIGH to CANx_LOW	- 0.3 to 16.5	V
SWITCHED_POWER to GND DIGITAL_IN_X to GND	- 0.3 to 16.5	V
RS232_TX to RS232_GND	- 0.3 to 16.5	V
RS232_RX to RS232_GND	- 0.3 to 16.5	V
Storage Temperature	-40 to 85	°C
Operating Temperature	-40 to 75	°C

CELLULAR

Technology	Supported Bands	Carriers
4G LTE CAT 4	• B1 • B2 • B3 • B4 • B5 • B7 • B8 • B12 • B13 • B18 • B19 • B20 • B25 • B26 • B28 • B38 • B39 • B40 • B41	Tata Vodafone International
3G UMTS/HSPA	• B1 • B2 • B4 • B5 • B6 • B8 • B19	Tata Vodafone International
2G GSM/(E)GPRS	• 850 MHz (GSM) • 900 MHz E-GSM • 1800 MHz (DCS) • 1900 MHz (PCS)	Tata Vodafone International

ELECTRICAL SPECIFICATIONS

Symbol	Parameter	Min	Typ	Max	Unit
Power Supply					
$I_{operating}$	Idle current with digital outputs off		300		mA
I_{LPM}	Low power mode current*		1	35	mA
V_{IN}	Input voltage	9	12.5	16	V
CAN Bus (Compatible with CAN 2.0B, ISO 11783, and SAE J1939 (physical level). No internal terminations.)					
f_{CAN}	CAN BAUD Rate			1	Mbps
RS232 (Conforms to EIA/TIA 232)					
f_{RS232}	RS232 BAUD Rate		115.2		Kbps
2.4 GHz Wi-Fi at 18dBm TX as Access Point or Client a/b/g/n					
$n_{connections}$	Simultaneous connections			22**	Clients
2.4GHz Bluetooth 4.0 at 15 dBm TX					
$n_{connections}$	Simultaneous connections			2	Clients
Wireless Connections					
Z_0	Characteristic impedance		50		Ω
Digital Input/Key Switch					
$V_{KS, RISING}$	Key switch, low to high transition	3.6			V
$V_{KS, FALLING}$	Key switch, high to low transition			2.8	V
f_{DigIn}	DIGITAL_IN_0 frequency measurement	100		1000	Hz
Battery Sensor					
$V_{Batt, precision}$	Battery sensor resolution			0.1	V
$V_{Batt, range}$	Battery sensor operating range	9		16	V

* Current depends on enabled wake up features

** Single Access Point (AP) mode only

MECHANICAL

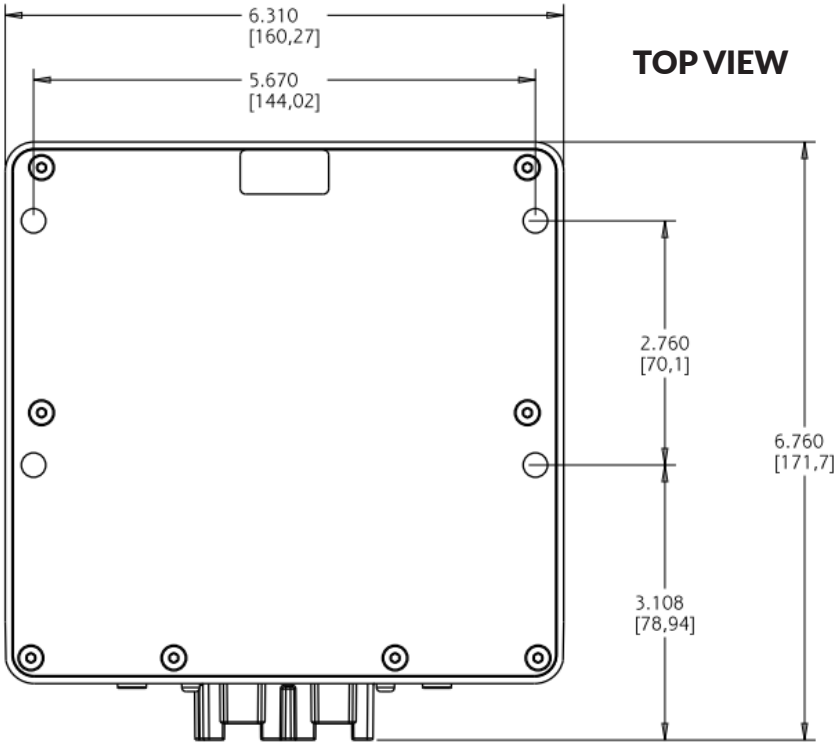

FRONT VIEW

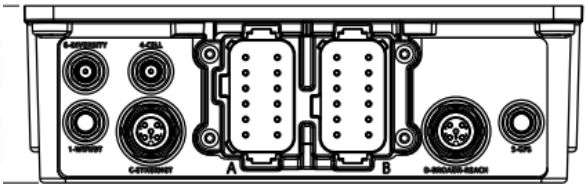

Weight: 1.81 lbs

Recommended Mating Connectors:
Connector A: Deutsch DT06-12SA
Connector B: Deutsch DT06-12SB
Connector C: M12 A-Coded
Connector D: M12 D-Coded

Mounting:
Do not mount gateway with connectors facing up. Gateway must be within range of Wi-Fi, Bluetooth, or M2M device (if applicable).

Recommended Antennas:
Hirschmann HCEL-S2-0164A-01
Hirschmann HIRD-S2-0146A-01

609964-000026 Rev 1.1 ©2019-2020 Appareo