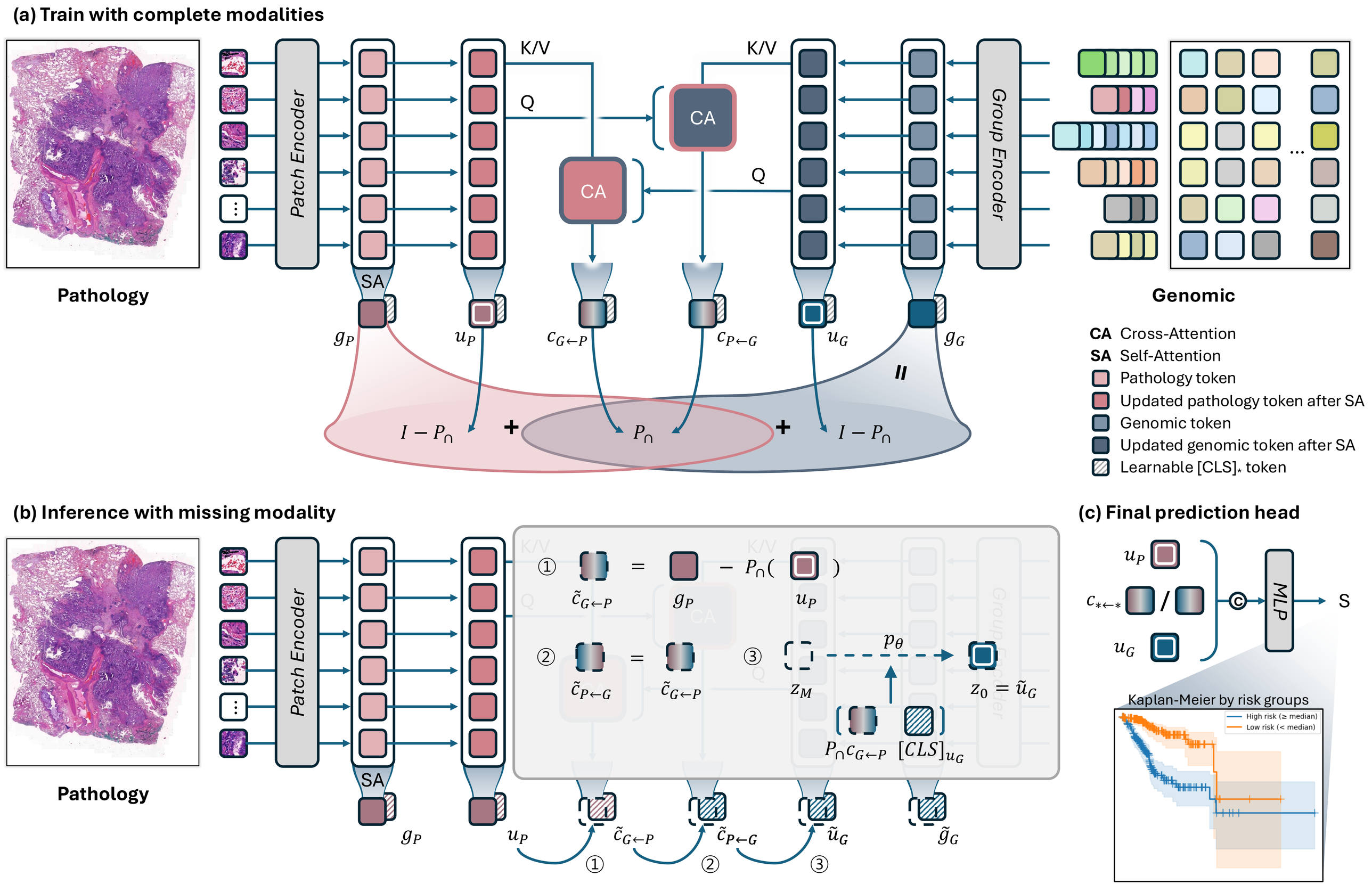
(a) Train with complete modalities
Pathology
Patch Encoder
SA
K/V
Q
CA
CA
K/V
Q
Group Encoder
Genomic
g_P
u_P
$c_{G\leftarrow P}$
$c_{P\leftarrow G}$
u_G
g_G
$I - P_\cap$
+
$P_\cap$
+
$I - P_\cap$
CA Cross-Attention
SA Self-Attention
Pathology token
Updated pathology token after SA
Genomic token
Updated genomic token after SA
Learnable [CLS]* token
(b) Inference with missing modality
Pathology
Patch Encoder
SA
g_P
u_P
① $\tilde{c}_{G\leftarrow P} = g_P - P_\cap(u_P)$
② $\tilde{c}_{P\leftarrow G} = \tilde{c}_{G\leftarrow P}$
③ $z_M \xrightarrow{p_\theta} z_0 = \tilde{u}_G$
$P_\cap c_{G\leftarrow P}$ $[CLS]_{u_G}$
$\tilde{c}_{G\leftarrow P}$
$\tilde{c}_{P\leftarrow G}$
$\tilde{u}_G$
$\tilde{g}_G$
(c) Final prediction head
u_P
$c_{*\leftarrow *}$
u_G
MLP
S
Kaplan-Meier by risk groups
High risk (≥ median)
Low risk (< median)