Two-Person Matrix

	Begins	Forward Weave				Reverse Weave			
Arrives	Partner Facing	F/F	B/B	F/B	B/F	F/F	B/B	F/B	B/F
Forward Weave	F/F	XT/XT	S/S	XT/S	S/XT	T/T	X/X	T/X	X/T
	B/B	S/S	XT/XT	S/XT	XT/S	X/X	T/T	X/T	T/X
	F/B	XT/S	S/XT	XT/XT	S/S	T/X	X/T	T/T	X/X
	B/F	S/XT	XT/S	S/S	XT/XT	X/T	T/X	X/X	T/T
Reverse Weave	F/F	T/T	X/X	T/X	X/T	XT/XT	S/S	XT/S	S/XT
	B/B	X/X	T/T	X/T	T/X	S/S	XT/XT	S/XT	XT/S
	F/B	T/X	X/T	T/T	X/X	XT/S	S/XT	XT/XT	S/S
	B/F	X/T	T/X	X/X	T/T	S/XT	XT/S	S/S	XT/XT

One-Person Matrix

		FWD		REV	
		F	B	F	B
FWD	F	XT	S	T	X
	B	S	XT	X	T
REV	F	T	X	XT	S
	B	X	T	S	XT

or

	Petal	Stall
Same Direction ->	S	XT
Switch Direction ->	T	X

Partner Poi Transition Matrix

How to read this chart

The base weave for this chart has each performer spinning in split-time opposite direction relative to themselves. Each weave, then has a forward orientation (poi spinning away from performer's center line on top) and a reverse orientation (poi spinning toward performer's center line on top).

Each tile in the chart represents a transition that two partners may use to get from a position in the side row to a position on the top row. The top left corner is always partner 1 and the bottom right partner 2, thus from a position where the two partners begin facing each other in a forwards weave, the first person will perform a turn and the other a stall to arrive at a point where they are front-to-back in a reverse weave. This transition can be read as such:

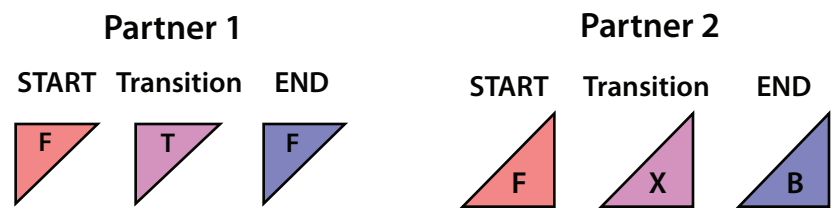

There are two ways to approach a single person matrix--one is to simply remove all data related to the second spinner from the two-person matrix, or to approach the diagram as being dependent on two questions: does the spinner switch the direction of their weaves and will they perform a stall or flower petal during their transition? Slides and stalls with turns will both conserve the direction of the weave whereas turns and stalls will both reverse the weave direction.

Key
F - Front faces partner
B - Back faces partner
S - Slide
X - Stall
T - Turn

This notation is somewhat additive, so XT should be considered a stall with a turn added.

These charts are the work of Ben "Drex" Drexler and Morgan Howe, with credit due to Justin Warren and Christina Koller for defining and exploring these initial concepts.

Two-Person Transition Chart

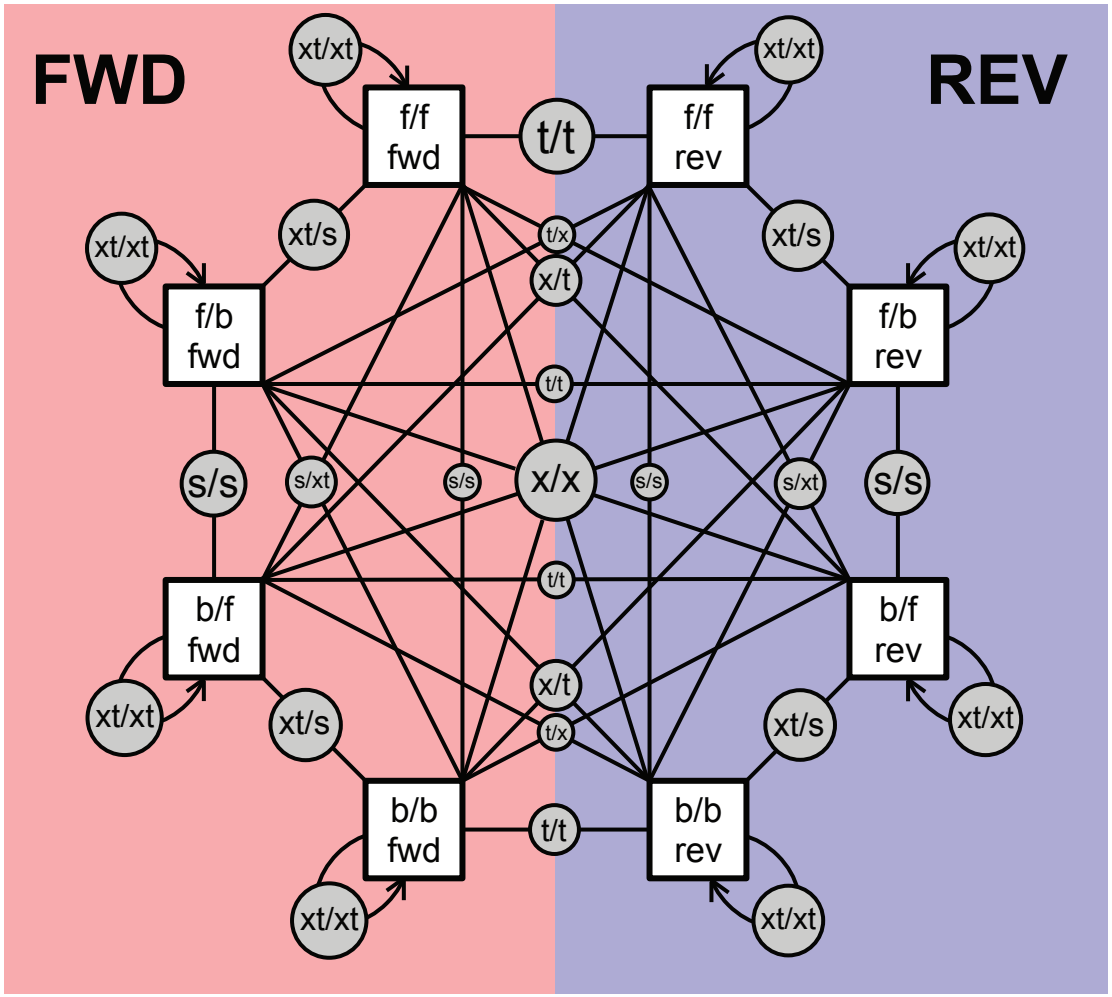

One-Person Transition Chart

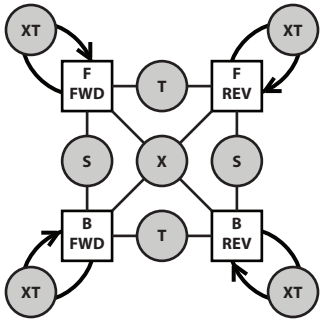

Key

F - Front faces partner
B - Back faces partner
S - Slide
X - Stall
T - Turn

A/B - A is the postion or movement of performer 1 and B is the position or movement of performer 2.

This notation is somewhat additive, so XT should be considered a stall with a turn added.

Partner Poi Transition Chart

How to read this chart

The base weave for this chart has each performer spinning in split-time opposite direction relative to themselves. Each weave, then has a forward orientation (poi spinning away from performer's center line on top) and a reverse orientation (poi spinning toward performer's center line on top).

Each square represents a beginning or ending position for the pair of performers, including their relative facing to each other and the direction of their weaves. Each line represents a transition to get to a particular end square with a grey circle at some point along the line which denotes the transition necessary to get there. Grey circles appear at intersections in which both of the lines represent the same transition. In each case, the letter on the left represents the movements of performer 1 and the letter on the right side represents the movements of performer 2. Please note: all transitions are two-way and may be performed in either direction.

Thus, for a pair of partners facing back to front of each other in a forward weave that wanted to switch to front to front in a reverse weave, Performer 1 would use a Turn and Performer 2 would use a Stall. This would be read as such:

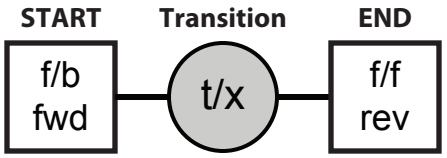

The chart can be simplified down to the actions of a single performer and so long as both performers are operating by this set of rules, valid weaves can still be arrived at. In this case, there are four initial positions with three possible transitions to different positions and a single transition back to the original position.

These charts are the work of Ben "Drex" Drexler and Morgan Howe, with credit due to Justin Warren and Christina Koller for defining and exploring these initial concepts.