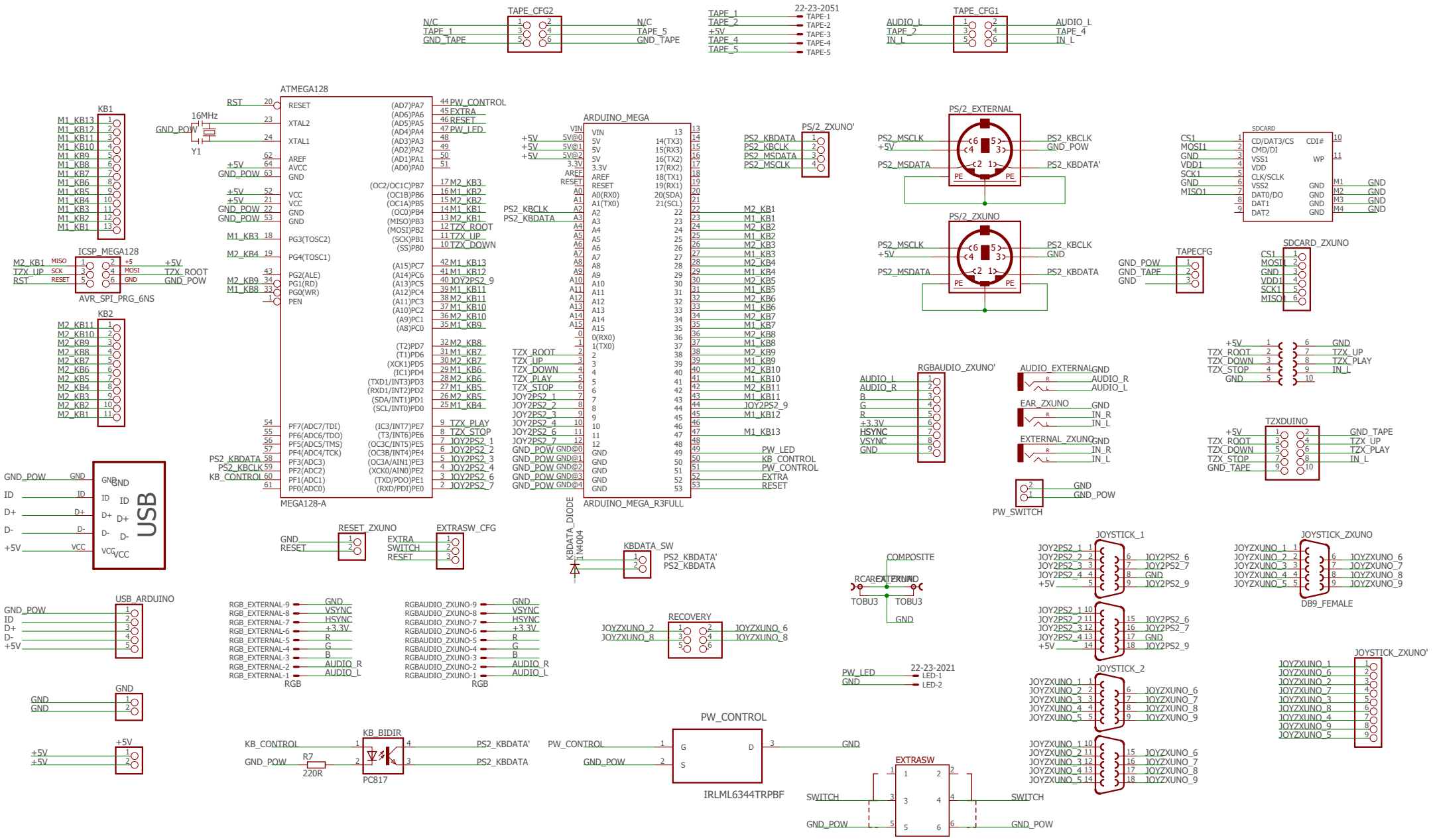
TAPE_CFG2
N/C
TAPE_1
GND_TAPE
N/C
TAPE_5
GND_TAPE
22-23-2051
TAPE_1
TAPE_2
+5V
TAPE_4
TAPE_5
TAPE-1
TAPE-2
TAPE-3
TAPE-4
TAPE-5
TAPE_CFG1
AUDIO_L
TAPE_2
IN_L
AUDIO_L
TAPE_4
IN_L
ATMEGA128
RESET
XTAL2
XTAL1
AREF
AVCC
GND
VCC
PG3(TOSC2)
PG4(TOSC1)
PG2(ALE)
PG1(RD)
PG0(WR)
PEN
PF7(ADC7/TDI)
PF6(ADC6/TDO)
PF5(ADC5/TMS)
PF4(ADC4/TCK)
PF3(ADC3)
PF2(ADC2)
PF1(ADC1)
PF0(ADC0)
(AD7)PA7
(AD6)PA6
(AD5)PA5
(AD4)PA4
(AD3)PA3
(AD2)PA2
(AD1)PA1
(AD0)PA0
(OC2/OC1C)PB7
(OC1B)PB6
(OC1A)PB5
(OC0)PB4
(MISO)PB3
(MOSI)PB2
(SCK)PB1
(SS)PB0
(A15)PC7
(A14)PC6
(A13)PC5
(A12)PC4
(A11)PC3
(A10)PC2
(A9)PC1
(A8)PC0
(T2)PD7
(T1)PD6
(XCK1)PD5
(IC1)PD4
(TXD1/INT3)PD3
(RXD1/INT2)PD2
(SDA/INT1)PD1
(SCL/INT0)PD0
(IC3/INT7)PE7
(T3/INT6)PE6
(OC3C/INT5)PE5
(OC3B/INT4)PE4
(OC3A/AIN1)PE3
(XCK0/AIN0)PE2
(TXD/PDO)PE1
(RXD/PDI)PE0
MEGA128-A
PW_CONTROL
EXTRA
RESET
PW_LED
M2_KB3
M1_KB2
M2_KB2
M1_KB1
M2_KB1
TZX_ROOT
TZX_UP
TZX_DOWN
M1_KB3
M2_KB4
M1_KB13
M1_KB12
JOY2PS2_9
M1_KB11
M2_KB11
M1_KB10
M2_KB10
M1_KB9
M2_KB9
M1_KB8
M2_KB8
M1_KB7
M2_KB7
M1_KB6
M2_KB6
M1_KB5
M2_KB5
M1_KB4
TZX_PLAY
TZX_STOP
JOY2PS2_1
JOY2PS2_2
JOY2PS2_3
JOY2PS2_4
JOY2PS2_6
JOY2PS2_7
PS2_KBDATA
PS2_KBCLK
KB_CONTROL
KB1
M1_KB13
M1_KB12
M1_KB11
M1_KB10
M1_KB9
M1_KB8
M1_KB7
M1_KB6
M1_KB5
M1_KB4
M1_KB3
M1_KB2
M1_KB1
16MHz
GND_POW
Y1
ICSP_MEGA128
M2_KB1
TZX_UP
RST
MISO
SCK
RESET
+5V
MOSI
GND
TZX_ROOT
GND_POW
AVR_SPI_PRG_6NS
KB2
M2_KB11
M2_KB10
M2_KB9
M2_KB8
M2_KB7
M2_KB6
M2_KB5
M2_KB4
M2_KB3
M2_KB2
M2_KB1
USB
GND_POW
ID
D+
D-
+5V
GND
VCC
RESET_ZXUNO
GND
RESET
EXTRASW_CFG
EXTRA
SWITCH
RESET
ARDUINO_MEGA
VIN
5V
3.3V
AREF
RESET
A0(RX0)
A1(TX0)
A2
A3
A4
A5
A6
A7
A8
A9
A10
A11
A12
A13
A14
A15
0(RX0)
1(TX0)
2
3
4
5
6
7
8
9
10
11
12
GND
14(TX3)
15(RX3)
16(TX2)
17(RX2)
18(TX1)
19(RX1)
20(SDA)
21(SCL)
ARDUINO_MEGA_R3FULL
PS2_KBDATA
PS2_KBCLK
PS2_MSDATA
PS2_MSCLK
PS2_KBCLK
PS2_KBDATA
PS2_ZXUNO'
PS2_EXTERNAL
PS2_MSCLK
+5V
PS2_MSDATA
PS2_KBCLK
GND_POW
PS2_KBDATA'
PE
PS2_ZXUNO
PS2_MSCLK
+5V
PS2_MSDATA
PS2_KBCLK
GND
PS2_KBDATA
SDCARD
CS1
MOSI1
GND
VDD1
SCK1
GND
MISO1
CD/DAT3/CS
CMD/DI
VSS1
VDD
CLK/SCLK
VSS2
DAT0/DO
DAT1
DAT2
CDI#
WP
M1
M2
M3
M4
TAPECFG
GND_POW
GND_TAPE
GND
SDCARD_ZXUNO
CS1
MOSI1
GND
VDD1
SCK1
MISO1
RGBAUDIO_ZXUNO'
AUDIO_L
AUDIO_R
B
G
R
+3.3V
HSYNC
VSYNC
GND
AUDIO_EXTERNAL
GND
AUDIO_R
AUDIO_L
EAR_ZXUNO
GND
IN_R
IN_L
EXTERNAL_ZXUNO
GND
IN_R
IN_L
PW_SWITCH
GND
GND_POW
+5V
TZX_ROOT
TZX_DOWN
TZX_STOP
GND
GND
TZX_UP
TZX_PLAY
IN_L
TZXDUINO
+5V
TZX_ROOT
TZX_DOWN
TZX_STOP
GND_TAPE
GND_TAPE
TZX_UP
TZX_PLAY
IN_L
KBDATA_DIODE
1N4004
KBDATA_SW
PS2_KBDATA'
PS2_KBDATA
COMPOSITE
RCA
EXTERNAL
TOBU3
TOBU3
GND
JOYSTICK_1
JOY2PS2_1
JOY2PS2_2
JOY2PS2_3
JOY2PS2_4
+5V
JOY2PS2_6
JOY2PS2_7
GND
JOY2PS2_9
JOYSTICK_ZXUNO
JOYZXUNO_1
JOYZXUNO_2
JOYZXUNO_3
JOYZXUNO_4
JOYZXUNO_5
JOYZXUNO_6
JOYZXUNO_7
JOYZXUNO_8
JOYZXUNO_9
DB9_FEMALE
USB_ARDUINO
GND_POW
ID
D+
D-
+5V
RGB_EXTERNAL-9
RGB_EXTERNAL-8
RGB_EXTERNAL-7
RGB_EXTERNAL-6
RGB_EXTERNAL-5
RGB_EXTERNAL-4
RGB_EXTERNAL-3
RGB_EXTERNAL-2
RGB_EXTERNAL-1
GND
VSYNC
HSYNC
+3.3V
R
G
B
AUDIO_R
AUDIO_L
RGB
RGBAUDIO_ZXUNO-9
RGBAUDIO_ZXUNO-8
RGBAUDIO_ZXUNO-7
RGBAUDIO_ZXUNO-6
RGBAUDIO_ZXUNO-5
RGBAUDIO_ZXUNO-4
RGBAUDIO_ZXUNO-3
RGBAUDIO_ZXUNO-2
RGBAUDIO_ZXUNO-1
GND
VSYNC
HSYNC
+3.3V
R
G
B
AUDIO_R
AUDIO_L
RGB
RECOVERY
JOYZXUNO_2
JOYZXUNO_8
JOYZXUNO_6
JOYZXUNO_8
PW_LED
GND
22-23-2021
LED-1
LED-2
JOYSTICK_ZXUNO'
JOYZXUNO_1
JOYZXUNO_6
JOYZXUNO_2
JOYZXUNO_7
JOYZXUNO_3
JOYZXUNO_8
JOYZXUNO_4
JOYZXUNO_9
JOYZXUNO_5
GND
GND
+5V
+5V
KB_BIDIR
KB_CONTROL
GND_POW
R7
220R
PC817
PS2_KBDATA'
PS2_KBDATA
PW_CONTROL
PW_CONTROL
GND_POW
G
S
D
IRLML6344TRPBF
GND
EXTRASW
SWITCH
GND_POW
SWITCH
GND_POW

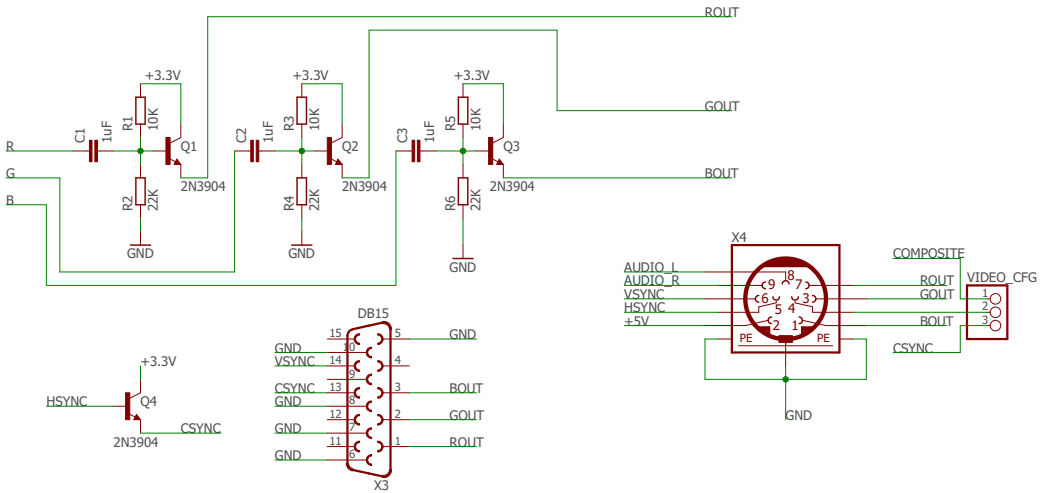
ROUT
GOUT
BOUT
+3.3V
+3.3V
+3.3V
R
G
B
C1
1uF
R1
10K
R2
22K
Q1
2N3904
GND
C2
1uF
R3
10K
R4
22K
Q2
2N3904
GND
C3
1uF
R5
10K
R6
22K
Q3
2N3904
GND
+3.3V
HSYNC
Q4
2N3904
CSYNC
DB15
GND
VSYNC
CSYNC
GND
GND
GND
GND
BOUT
GOUT
ROUT
X3
X4
AUDIO_L
AUDIO_R
VSYNC
HSYNC
+5V
PE
PE
COMPOSITE
ROUT
GOUT
BOUT
CSYNC
VIDEO_CFG
GND