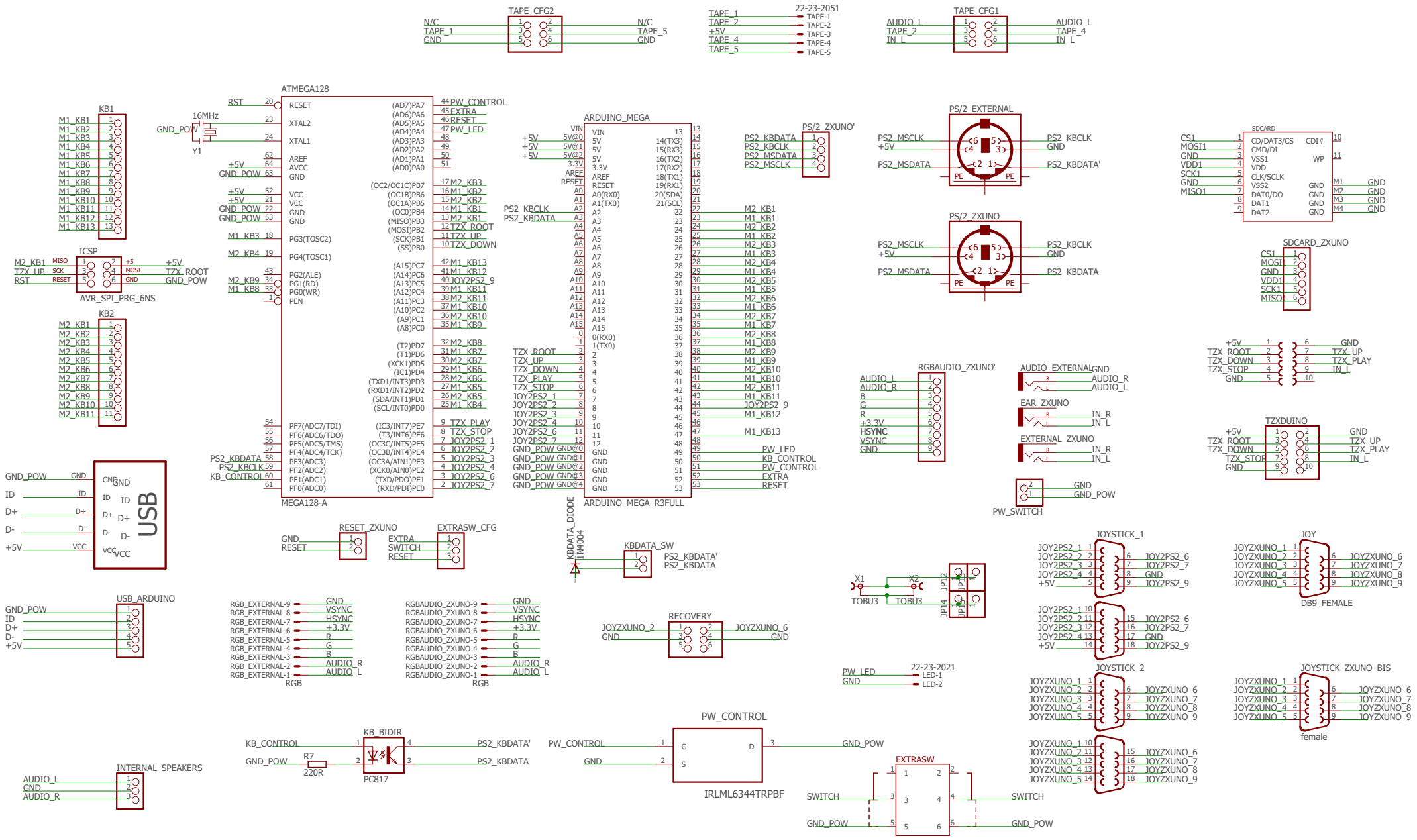
TAPE_CFG2
N/C
TAPE_1
GND
N/C
TAPE_5
GND
22-23-2051
TAPE_1
TAPE_2
+5V
TAPE_4
TAPE_5
TAPE-1
TAPE-2
TAPE-3
TAPE-4
TAPE-5
TAPE_CFG1
AUDIO_L
TAPE_2
IN_L
AUDIO_L
TAPE_4
IN_L
ATMEGA128
MEGA128-A
KB1
KB2
16MHz
Y1
GND_POW
+5V
RST
ICSP
AVR_SPI_PRG_6NS
M2_KB1
TZX_UP
RST
MISO
SCK
RESET
MOSI
GND
TZX_ROOT
GND_POW
ARDUINO_MEGA
ARDUINO_MEGA_R3FULL
PS2_KBCLK
PS2_KBDATA
PS2_KBDATA'
PS2_KBCLK
PS2_MSCLK
PS2_MSDATA
PS2_ZXUNO'
PS2_EXTERNAL
PS2_ZXUNO
PS2_KBCLK
GND
PS2_KBDATA'
PS2_KBDATA
SDCARD
SDCARD_ZXUNO
CS1
MOSI1
GND
VDD1
SCK1
MISO1
M1
M2
M3
M4
RGBAUDIO_ZXUNO'
AUDIO_L
AUDIO_R
B
G
R
+3.3V
HSYNC
VSYNC
GND
AUDIO_EXTERNAL
EAR_ZXUNO
EXTERNAL_ZXUNO
IN_R
IN_L
PW_SWITCH
GND_POW
TZXDUINO
TZX_ROOT
TZX_DOWN
TZX_STOP
TZX_UP
TZX_PLAY
IN_L
USB
GND_POW
ID
D+
D-
+5V
VCC
RESET_ZXUNO
GND
RESET
EXTRASW_CFG
EXTRA
SWITCH
RESET
KBDATA_DIODE
1N4004
KBDATA_SW
PS2_KBDATA'
PS2_KBDATA
USB_ARDUINO
RGB
RGB_EXTERNAL-9
RGB_EXTERNAL-8
RGB_EXTERNAL-7
RGB_EXTERNAL-6
RGB_EXTERNAL-5
RGB_EXTERNAL-4
RGB_EXTERNAL-3
RGB_EXTERNAL-2
RGB_EXTERNAL-1
GND
VSYNC
HSYNC
+3.3V
R
G
B
AUDIO_R
AUDIO_L
RGBAUDIO_ZXUNO-9
RGBAUDIO_ZXUNO-8
RGBAUDIO_ZXUNO-7
RGBAUDIO_ZXUNO-6
RGBAUDIO_ZXUNO-5
RGBAUDIO_ZXUNO-4
RGBAUDIO_ZXUNO-3
RGBAUDIO_ZXUNO-2
RGBAUDIO_ZXUNO-1
RECOVERY
JOYZXUNO_2
JOYZXUNO_6
GND
X1
X2
TOBU3
JP12
JP13
JP14
JP15
JOYSTICK_1
JOY2PS2_1
JOY2PS2_2
JOY2PS2_3
JOY2PS2_4
+5V
JOY2PS2_6
JOY2PS2_7
GND
JOY2PS2_9
JOY
JOYZXUNO_1
JOYZXUNO_2
JOYZXUNO_3
JOYZXUNO_4
JOYZXUNO_5
JOYZXUNO_6
JOYZXUNO_7
JOYZXUNO_8
JOYZXUNO_9
DB9_FEMALE
PW_LED
GND
22-23-2021
LED-1
LED-2
JOYSTICK_2
JOYSTICK_ZXUNO_BIS
female
INTERNAL_SPEAKERS
AUDIO_L
GND
AUDIO_R
KB_BIDIR
KB_CONTROL
GND_POW
R7
220R
PC817
PS2_KBDATA'
PS2_KBDATA
PW_CONTROL
GND
IRLML6344TRPBF
EXTRASW
SWITCH
GND_POW

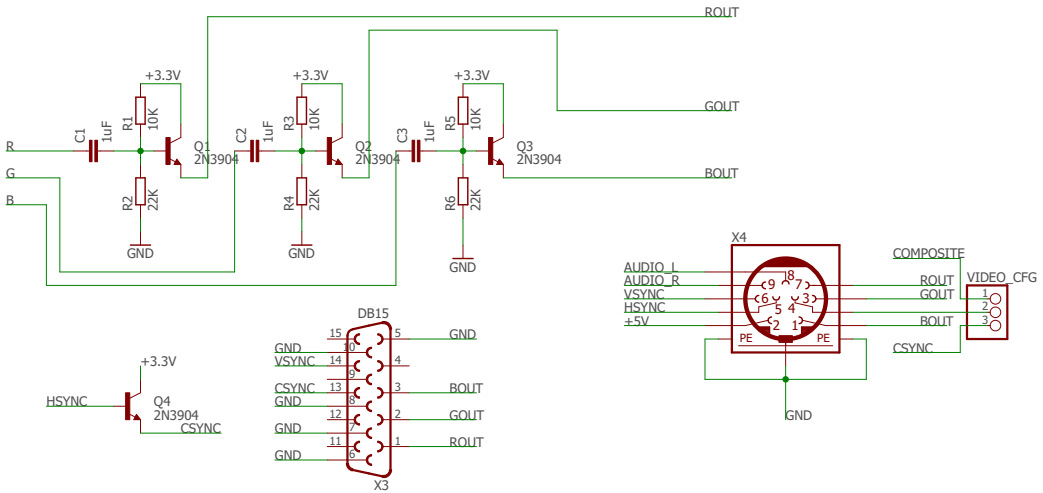
ROUT
GOUT
BOUT
+3.3V
+3.3V
+3.3V
R
G
B
C1
1uF
R1
10K
R2
22K
Q1
2N3904
C2
1uF
R3
10K
R4
22K
Q2
2N3904
C3
1uF
R5
10K
R6
22K
Q3
2N3904
GND
GND
GND
HSYNC
+3.3V
Q4
2N3904
CSYNC
DB15
GND
VSYNC
CSYNC
GND
GND
GND
GND
BOUT
GOUT
ROUT
X3
X4
AUDIO_L
AUDIO_R
VSYNC
HSYNC
+5V
PE
PE
COMPOSITE
ROUT
GOUT
BOUT
CSYNC
VIDEO_CFG
GND