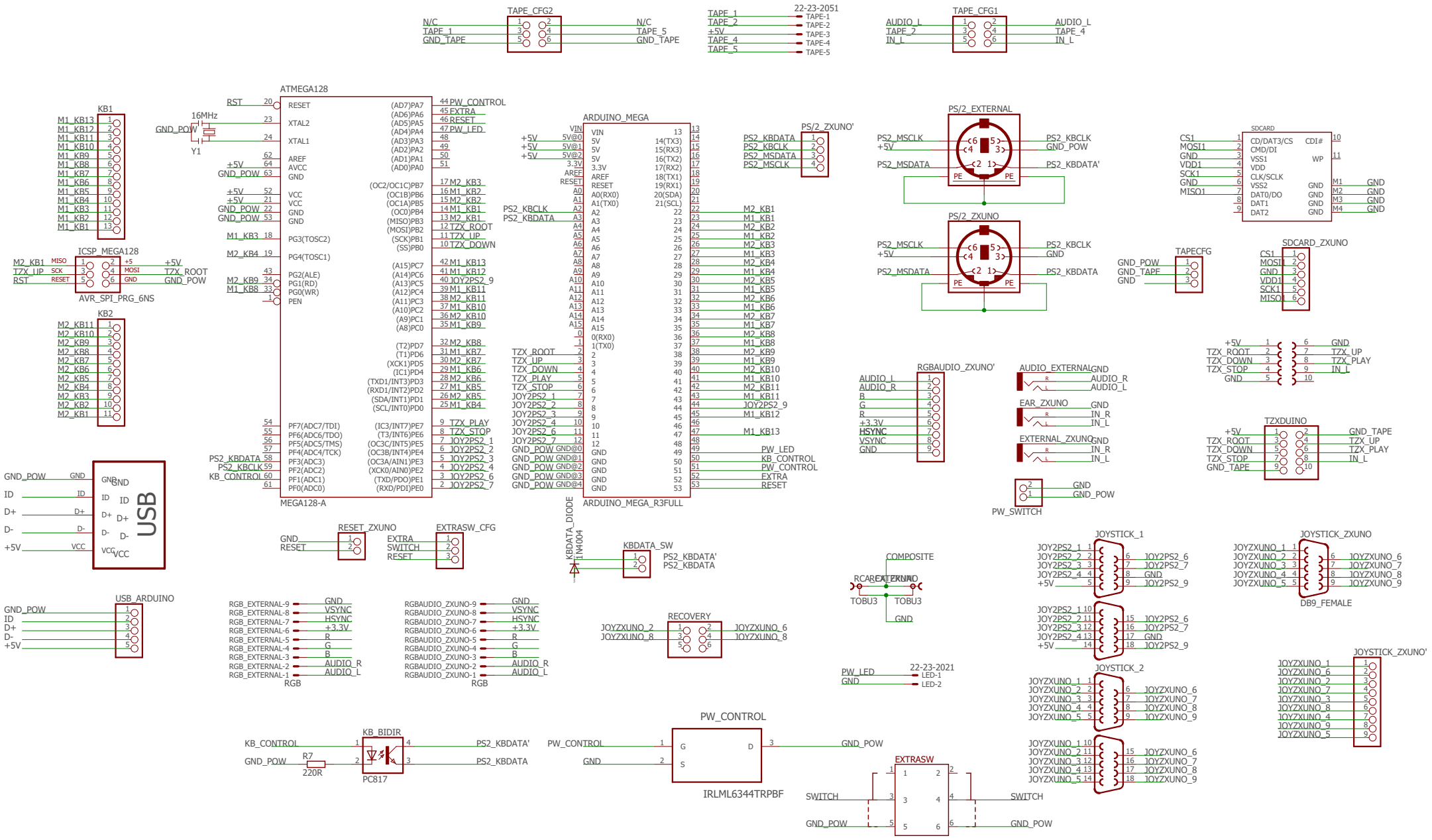
TAPE_CFG2
N/C
TAPE_1
GND_TAPE
N/C
TAPE_5
GND_TAPE
22-23-2051
TAPE_1
TAPE_2
+5V
TAPE_4
TAPE_5
TAPE-1
TAPE-2
TAPE-3
TAPE-4
TAPE-5
TAPE_CFG1
AUDIO_L
TAPE_2
IN_L
AUDIO_L
TAPE_4
IN_L
ATMEGA128
RESET
XTAL2
XTAL1
AREF
AVCC
GND
VCC
PG3(TOSC2)
PG4(TOSC1)
PG2(ALE)
PG1(RD)
PG0(WR)
PEN
PF7(ADC7/TDI)
PF6(ADC6/TDO)
PF5(ADC5/TMS)
PF4(ADC4/TCK)
PF3(ADC3)
PF2(ADC2)
PF1(ADC1)
PF0(ADC0)
(AD7)PA7
(AD6)PA6
(AD5)PA5
(AD4)PA4
(AD3)PA3
(AD2)PA2
(AD1)PA1
(AD0)PA0
(OC2/OC1C)PB7
(OC1B)PB6
(OC1A)PB5
(OC0)PB4
(MISO)PB3
(MOSI)PB2
(SCK)PB1
(SS)PB0
(A15)PC7
(A14)PC6
(A13)PC5
(A12)PC4
(A11)PC3
(A10)PC2
(A9)PC1
(A8)PC0
(T2)PD7
(T1)PD6
(XCK1)PD5
(IC1)PD4
(TXD1/INT3)PD3
(RXD1/INT2)PD2
(SDA/INT1)PD1
(SCL/INT0)PD0
(IC3/INT7)PE7
(T3/INT6)PE6
(OC3C/INT5)PE5
(OC3B/INT4)PE4
(OC3A/AIN1)PE3
(XCK0/AIN0)PE2
(TXD/PDO)PE1
(RXD/PDI)PE0
MEGA128-A
KB1
KB2
16MHz
Y1
ICSP_MEGA128
AVR_SPI_PRG_6NS
USB
USB_ARDUINO
RESET_ZXUNO
EXTRASW_CFG
KBDATA_DIODE
1N4004
KBDATA_SW
ARDUINO_MEGA
ARDUINO_MEGA_R3FULL
PS/2_ZXUNO'
PS/2_EXTERNAL
PS/2_ZXUNO
SDCARD
SDCARD_ZXUNO
TAPECFG
RGBAUDIO_ZXUNO'
AUDIO_EXTERNAL
EAR_ZXUNO
EXTERNAL_ZXUNO
PW_SWITCH
TZXDUINO
RGB
RGBAUDIO_ZXUNO
COMPOSITE
RECOVERY
JOYSTICK_1
JOYSTICK_2
JOYSTICK_ZXUNO
DB9_FEMALE
JOYSTICK_ZXUNO'
22-23-2021
KB_BIDIR
PC817
PW_CONTROL
IRLML6344TRPBF
EXTRASW

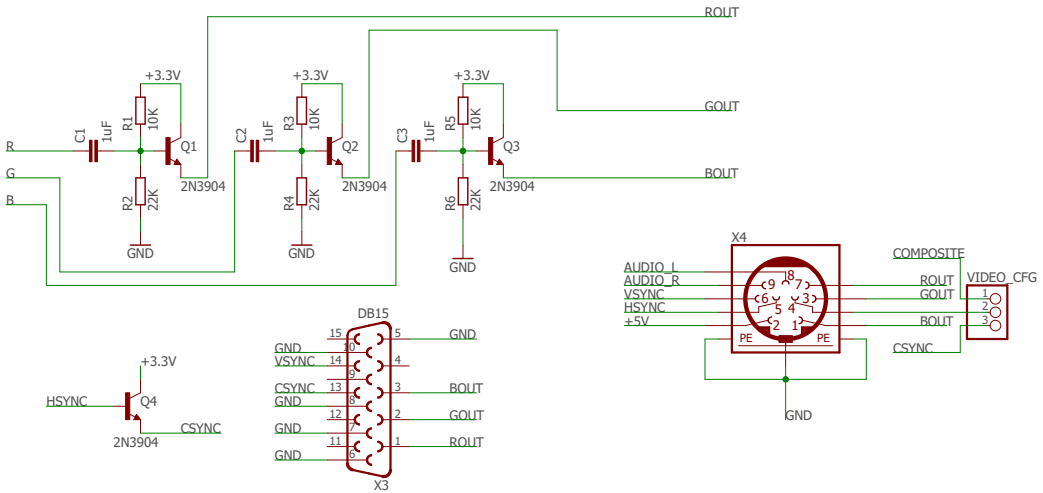
ROUT
GOUT
BOUT
+3.3V
+3.3V
+3.3V
R
G
B
C1
1uF
R1
10K
R2
22K
Q1
2N3904
GND
C2
1uF
R3
10K
R4
22K
Q2
2N3904
GND
C3
1uF
R5
10K
R6
22K
Q3
2N3904
GND
+3.3V
HSYNC
Q4
2N3904
CSYNC
DB15
GND
VSYNC
CSYNC
GND
GND
GND
GND
BOUT
GOUT
ROUT
X3
X4
AUDIO_L
AUDIO_R
VSYNC
HSYNC
+5V
PE
PE
COMPOSITE
ROUT
GOUT
BOUT
CSYNC
VIDEO_CFG
GND