3/30/2026

Receiver filter Board

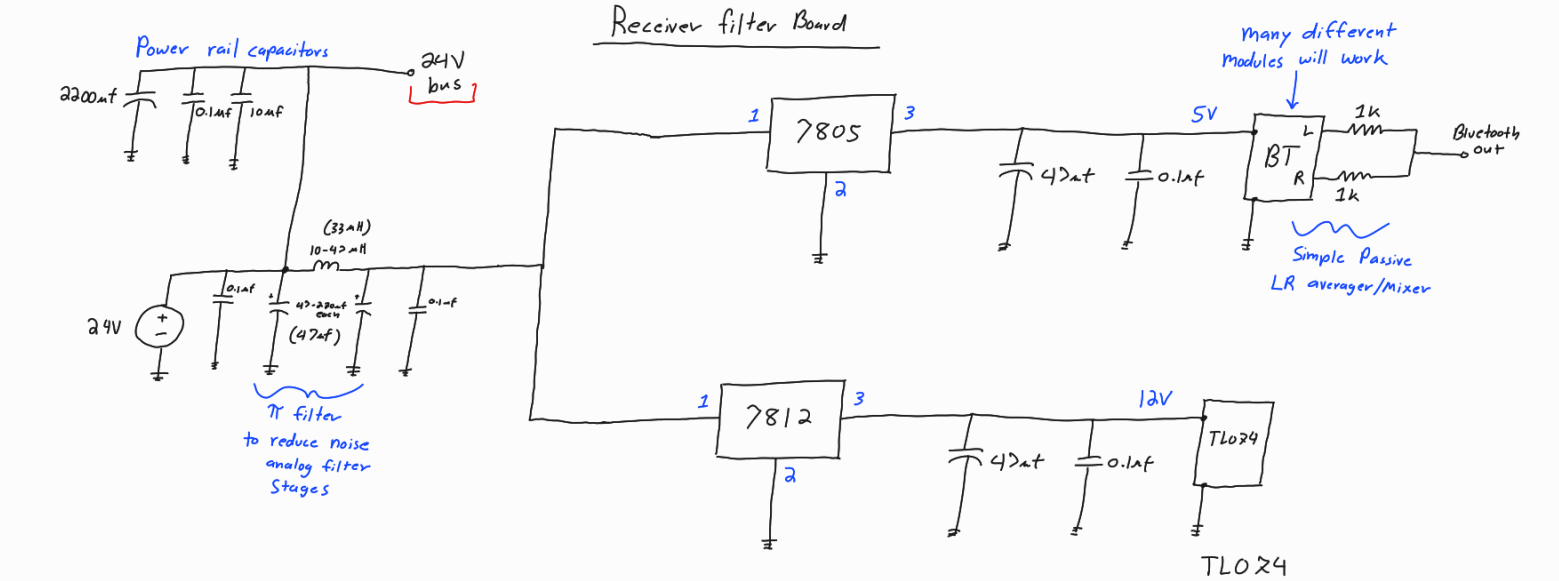

Vref Buffer

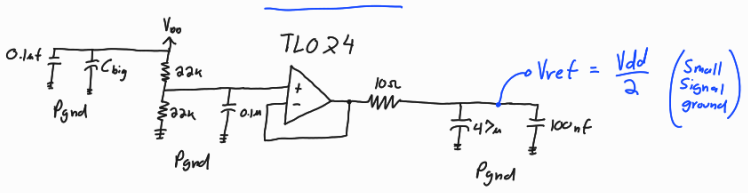

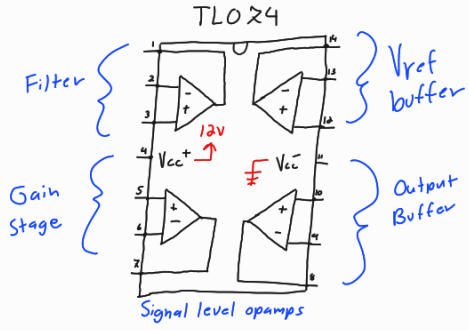

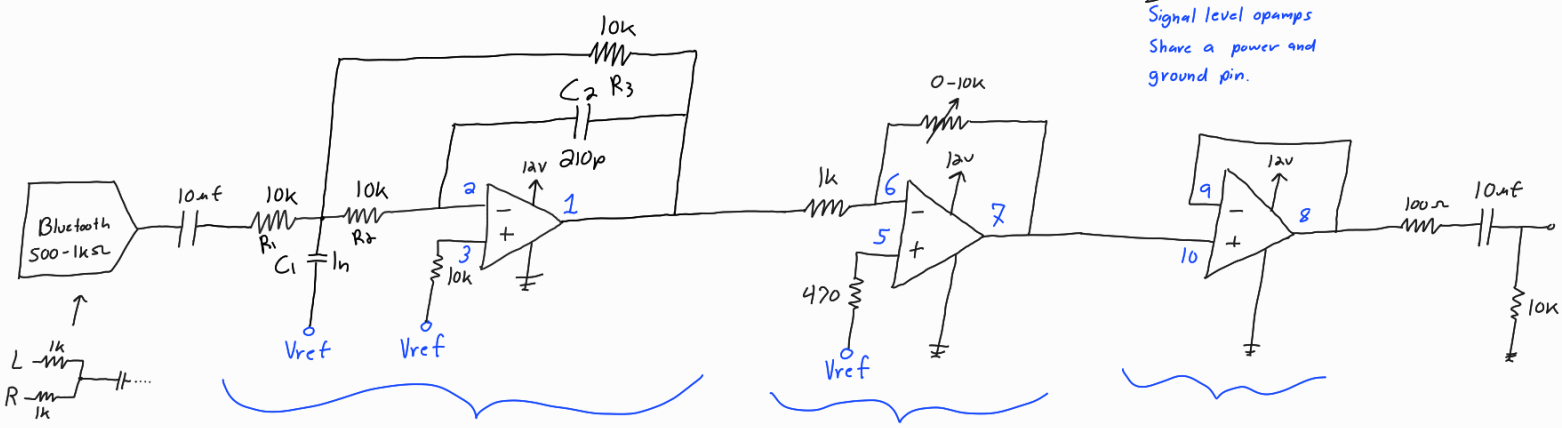

2nd order ~35kHz cutoff
for removing DAC noise

Gain stage

$$\text{Gain} = \frac{-R_f}{R_i}$$

$$= -\frac{[0, 10k]}{1k}$$

$$\text{Gain} = [0, -10]$$

Output Buffer

LM1875 BTL power stage with phase splitter

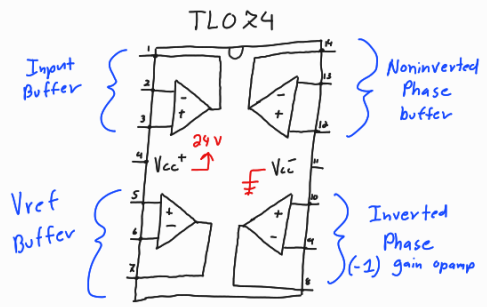

Signal level opamps share a power and ground pin.

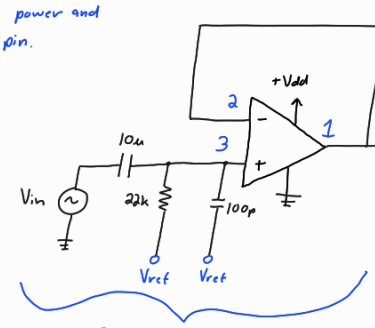

Input buffer with RF input filter

Vref buffer

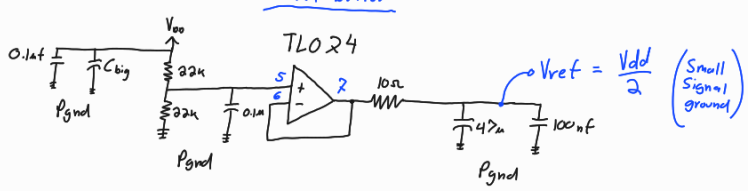

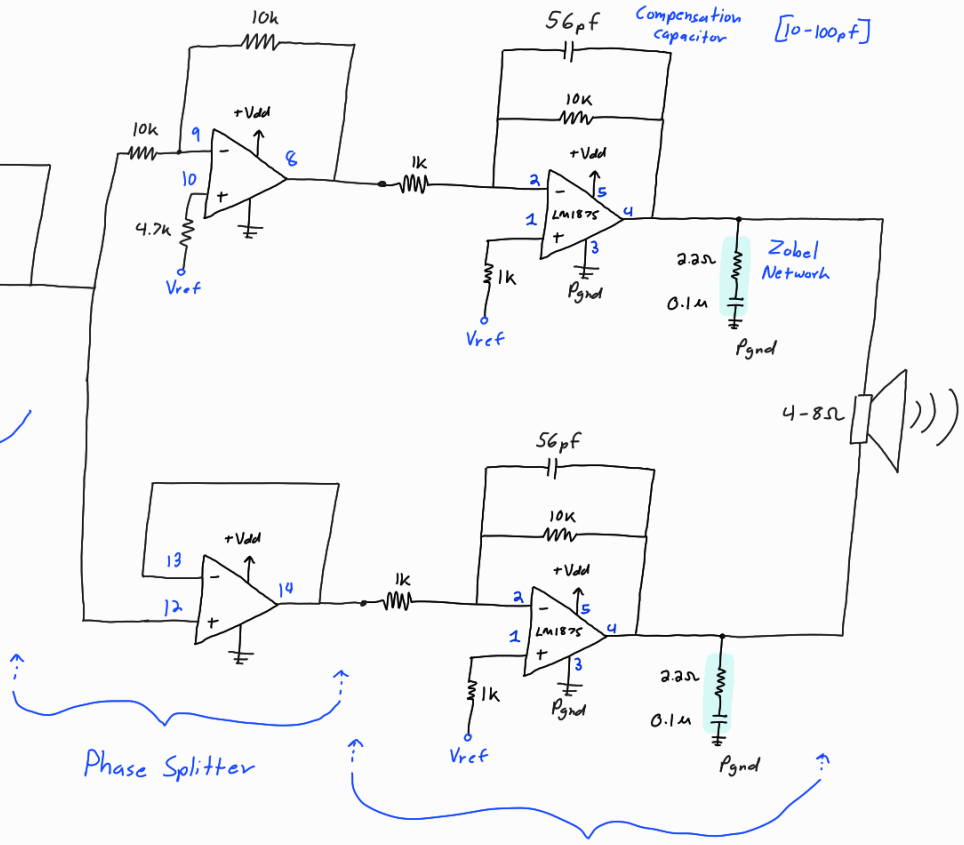

Phase Splitter

LM1875 BTL Power Stage

$$\text{Gain} = \frac{-R_f}{R_i} = \frac{-10{,}000}{1000}$$

Gain = −10 (− means inverting)

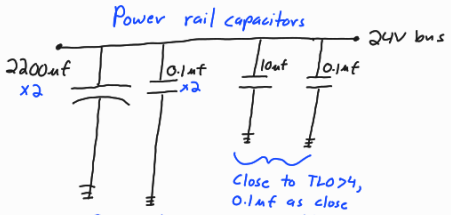

x2, one pair near each LM1875. 0.1uf as close as possible.
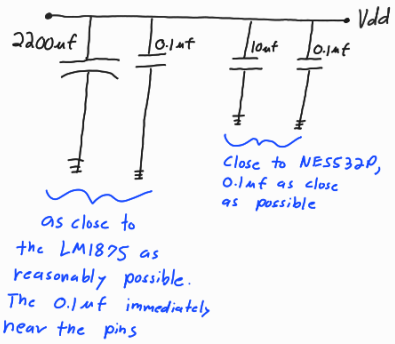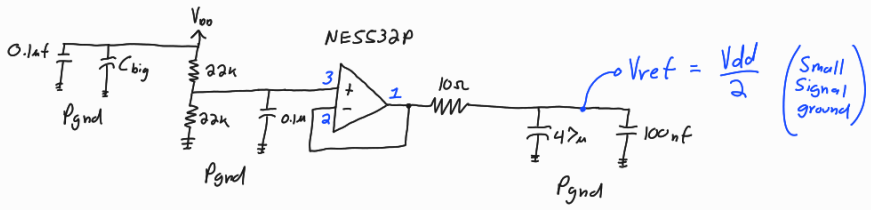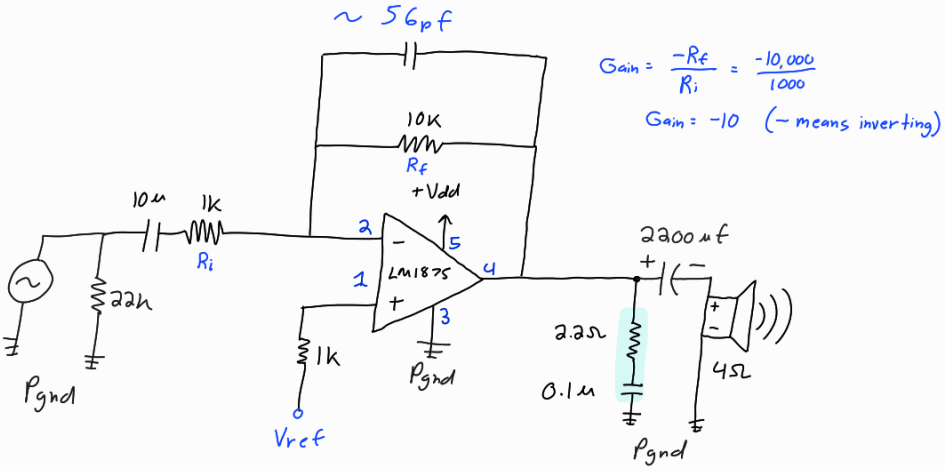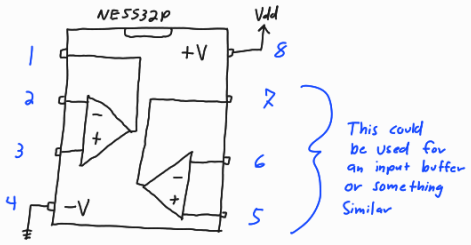
Single supply Inverting