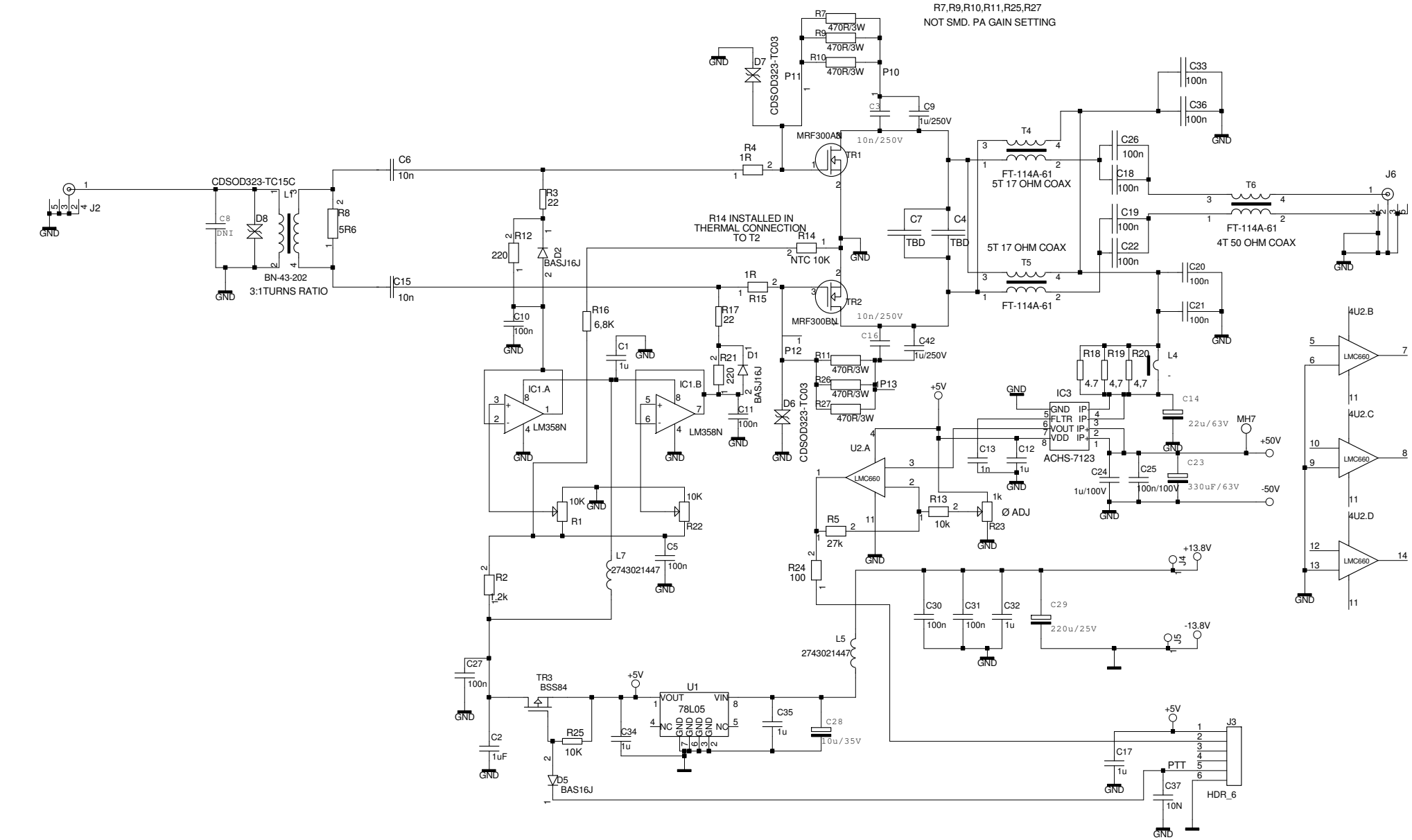

REV:2 0	DATE: 14/12-2021	ENG: LA2NI KJELL KARLSEN
PROJECT: MUNIN 400		
COMPANY: HPSDR COMMUNITY ADDRESS: - CITY - COUNTRY: -		
INITIAL 24.11.2018	PAGE: 1	OF: 1