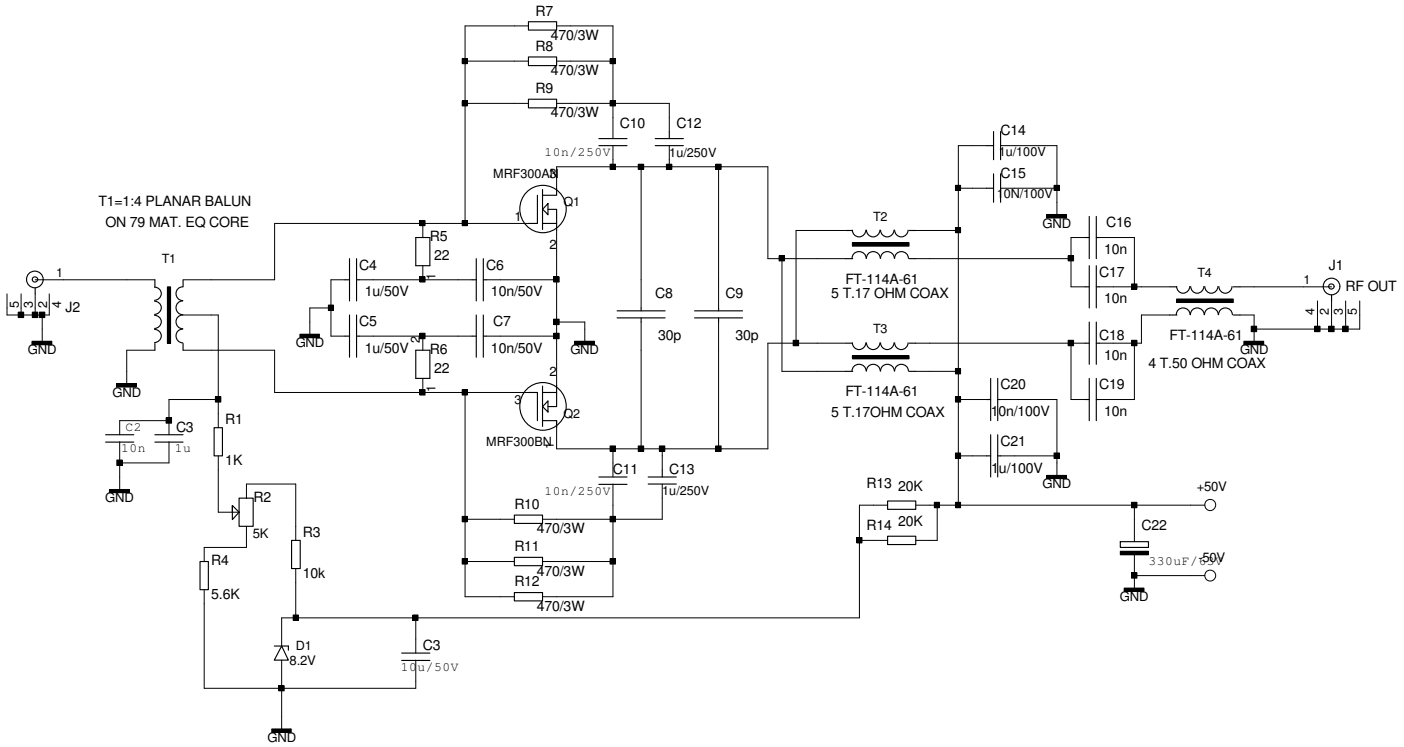

REV:2 0	DATE: 14.11.2019	ENG: LA2NI KJELL KARLSEN
PROJECT: NXP 400W PEP 2-145 MHZ PA		
COMPANY: HPSDR COMMUNITY ADDRESS: - CITY - COUNTRY: -		
INITIAL 24.11.2018	PAGE: 1	OF: 1