Early Glaucoma Screening Using YOLO and Deep Features from Fundus Images

Lavanya Singh
CSED, RGIPT
Amethi, India
22it3023@rgipt.ac.in

Divyanshi Singh
School of Medicine, TSMMCH
Lucknow, India
rdivyanshisingh5@gmail.com

Nirbhay Kumar Tagore
CSED, RGIPT
Amethi, India
nktagore@rgipt.ac.in

Y N Singh
CSED, IET
Lucknow, India
singhyn@gmail.com

***Abstract*—A precise and early diagnosis is necessary for glaucoma, a complicated pattern of eye illnesses that can cause irreversible deterioration of the optic nerve. Conventional techniques that depend on manually created features are not resilient to image noise and inter-subject variability. This study proposes an automated glaucoma detection framework integrating YOLOv8 for region of interest (ROI) localization and ResNet50 for deep feature extraction and classification. The model pipeline comprises fundus image acquisition, preprocessing, ONH segmentation, and classification. Superior performance is demonstrated by experimental validation on benchmark datasets, such as Drishti-GS, ORIGA, and G1020. On Drishti-GS, the model's accuracy, sensitivity, and specificity are 97.06%, 97.14%, and 95.77%, respectively. The suggested system achieves accuracy and sensitivity of up to 99.70% and 99.56% on G1020 and ORIGA, respectively. It attests to the effectiveness of the suggested model for accurate glaucoma screening.**

***Index Terms*—Glaucoma, deep learning, retinal fundus imaging, YOLO, computer vision.**

I. Introduction

Glaucoma ranks among the primary causes of blindness worldwide [1]. It encompasses a group of progressive neurodegenerative ocular disorders that result in vision impairment due to damage to the optic nerve head (ONH) [2]. The exact pathology of glaucoma is multifactorial and complex that is yet to be known. Medical evidence shows that age-related retinal diseases along with aging, medical conditions, eye trauma, immune status, and family history are potential risk factors [3]. Medical professionals usually assess retinal blood vessels along with nerve fibers and perform increased intraocular pressure (IOP) diagnostics and glaucoma screening.

Glaucoma is the world's second leading cause of blindness, ranked just after cataracts [4]. The severity of the disease can be understood from an estimate that glaucoma-affected people are growing from 60.5 million to 79.6 million in 2020 in the last decade, that will increase further to 111.8 million by 2040 [5] [6]. Among the glaucoma affected population, 59.67% are Asians. In particular, glaucoma accounted for 5.5% of total blindness in India in 2019, affecting 1.2 million people, which rose to 11.9 million in 2024.

Ophthalmologists detect glaucoma through screening of optic nerve and rational nerve fiber layer (RNFL) [10]. It includes the assessment of change in size of optic cup (OC) relative to optic disk (OD) i.e., optic nerve's Cup-to-Disc Ratio (CDR) and the measure of neuroretinal rim. For example, the retinal fundus images of normal and glaucomatous eyes along with the anatomy of OD, OC and neuroretinal rim are shown in Fig. 1(a) and (b), respectively. The CDR increases linearly with disc size therefore, a high CDR with a large ONH may suggest glaucoma [11]. The neuroretinal rim can be measured indirectly using CDR, which is also correlated with vision loss due to glaucoma.

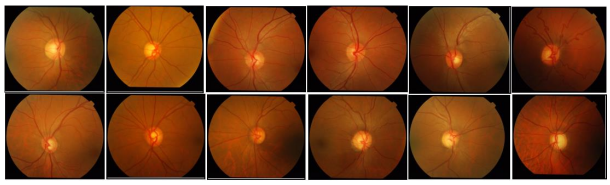

(a)

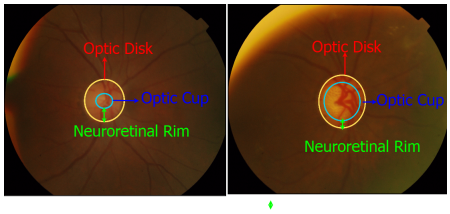

(b)

Fig. 1: (a) Retinal fundus images of normal (first row) and glaucomatous eyes (second row) ; (b) Neuroretinal rim, optic disc (OD), and optic cup (OC) anatomy in both healthy and glaucomatous eyes.

The shape and size of OD and OC varies significantly between individuals. However, the normal disc shape is usually oval with average height (vertical dia) 1.88 mm which is $\sim$10% bigger than average width (horizontal dia) 1.77 mm [12]. Although the physiology of optic disk size depends on the size scleral canal [13]. A typical optic cup is horizontally oval with an average diameter of 0.83 mm which is $\sim$8% larger than vertical dia of 0.58 mm. Similarly, the normal CDR typically ranging from 0.3 to 0.5. Quantitative analysis of statistical parameters derived for CDR and ONH morphology facilitates automated assessment of retinal fundus images, thereby enabling objective differentiation between glaucoma-

979-8-3315-6726-2/25/$31.00 © 2025 IEEE

tous and non-glaucomatous conditions.

Automated detection of glaucoma has been started after the advancement of computing technology, especially artificial intelligence in healthcare and medicine, significantly transforms medical imaging research [14]. Numerous machine learning and deep learning approaches have been extensively explored for glaucoma detection using retinal imaging [15]–[22]. These techniques primarily involve fundus image preprocessing, training over the segmented region of interests (ROI), *i.e.*, OC, OD, ONH, and finally classification to glaucomatous and non-glaucomatous eyes.

Fan *et al.*, suggested a structured learning technique for OD detection in retinal fundus images, leveraging local segmentation masks to infer OD boundaries [15]. The method integrates a thresholding mechanism and circle Hough transform to accurately delineate the disc region, achieving localization performance across several benchmark datasets. This study relies on hand-crafted features that are usually sensitive to image noise and variability. Thus, it may underperform compared to modern end-to-end models. Li *et al.*, presents a deep learning algorithm developed to identify glaucomatous optic neuropathy (GON) from color fundus images [16]. The study resulted high sensitivity and specificity reflecting its potential for glaucoma screening. The method relies on subjective CDR assessment that is prone to inter-grader variability along with a lack of benchmarked dataset used for validation to test generalizability.

Diaz-Pinto *et al.*, evaluates several deep learning models e.g., VGG16, ResNet50, Xception for glaucoma identification using publicly accessible fundus image datasets [17]. The study demonstrates that fine-tuned CNNs can effectively classify glaucoma without manual feature extraction, with the Xception model achieving the best results. The method is tested on small size publicly available datasets that increases risk of overfitting and limit robustness and scalability. Septiarini *et al.* introduces a method for glaucoma detection using statistical features derived from fundus images [18]. These features undergo selection using the correlation based method. Subsequently, the features are classified using k-nearest neighbor algorithm. On a dataset of 84 fundus images, the method achieved 95.24% accuracy. The method lacks the statistical significance of the derived features due to very limited data size and thus, limits the detection of complex patterns. Performance might degrade in noisy or low-quality fundus images. Therefore, it is not suitable for deployment in diverse scenarios.

Sreng et al. introduce a dual-phase approach for detecting glaucoma [19]. Initially, OD is segmented using a modified DeepLabv3+ model, then classification is done using CNN-based approaches. The method works well in multiple public datasets and demonstrated that the combination of DeepLabv3+ and MobileNet achieved optimal optic disc segmentation. This method performs well under precise and accurate optic disc segmentation, which may be challenging in images with noise and poor quality that finally affect the classification accuracy. Lin *et al.*, introduces a deep learning model named GlaucomaNet that diagnoses primary open-angle glaucoma from retinal fundus images [20]. It employs a two-stage architecture that firstly learns discriminative features and then it fuses the features to make a final diagnosis. The authors claimed that GlaucomaNet demonstrated high interpretability but lacks formal evaluation metrics to support this claim.

Saha *et al.*, introduces a deep learning framework for glaucoma screening that employs a two-step process: first, it utilizes a customized You Only Look Once (YOLO) architecture to localize the OD region and then classifies images as glaucomatous or non-glaucomatous using deep learning [21]. The study lacks to clarify that the reported performance was derived from an external validation set, which is crucial for model's generalization to hidden data. The study does not address the interpretability of the model's decisions, which is important for clinical acceptance and trust in AI-based diagnostic tools. Fan *et al.*, introduces a vision transformer model for improving generalizability and explainability for glaucoma detection [22]. This study acknowledges potential variability across datasets which can affect the model's performance and generalizability. Further vision transformer model demands computational resources, which may limit its feasibility in resource-constrained settings.

The studies conducted on glaucoma detection available in the literature face primarily several challenges, which are categorized and presented in Table I.To overcome these challenges, an automated approach is required that can identify glaucoma by leveraging fundus images, incorporating automatic Region of Interest (RoI) extraction for precise optic disc segmentation. The model should require minimal computational resources, spanning from preprocessing to feature generation and classification, while utilizing a benchmark dataset of substantial size that encompasses a diverse population. This paper proposes a novel model that accurately performs optic disc segmentation from retinal fundus images. It utilizes YOLOv8 [23] framework for the segmentation of OD, OC, and neuroretinal region then classify the extracted ROI features using a pretrained ResNet50 [24]. The results from the experiments indicate that the model performs better on the benchmark datasets for various demographics.The paper is organized in the following manner: the proposed methodology is discussed in Section II, including segmentation and classification techniques. Section III shows the experimental setup, datasets used, and results obtained. Section IV concludes the study, summarizing key findings and highlighting the potential impact of the proposed glaucoma detection framework.

II. Methodology

The proposed schematic for automated glaucoma detection is structured as a multistage deep learning architecture that process retinal fundus images and classify them as glaucomatous or normal as shown in Fig. 2. The model comprises four primary stages: fundus image acquisition i.e., stage 1, followed by stage 2 and 3 i.e., preprocessing of fundus images, and feature extraction, and final stage i.e., classification stage.

TABLE I: CHALLENGES IN GLAUCOMA DETECTION USING AUTOMATED METHODS

#	Category	Challenges
1	Model Limitations	• Handcrafted features are less robust to noise and variability • High dependency on accurate optic disc segmentation • No temporal data usage resulting in poor tracking of disease progression
2	Computational Challenges	• High computational requirements • Not suitable for resource-constrained settings e.g., portable devices
3	Data Quality & Diversity	• Small, non-diverse datasets increase overfitting risk • Lack of external validation reduces generalizability • Labeling inconsistencies among clinicians due to subjective metrics like cup-to-disc ratio

In the first stage the acquisition of dataset is obtained using a dataset that has been split into subsets for testing and training. While unseen images are used in the testing set to evaluate the model's capacity for generalization, labeled images are utilized in the training set to train and refine the model. Both subsets go through an identical preprocessing and analytic pipeline, preserving uniformity throughout the model-building and evaluation workflow, to guarantee consistency and dependability in performance.

The localization of RoI, *i.e.*, the optic disk, and the optic cup—important anatomical features pertinent to glaucoma assessment—is the goal of the preprocessing step. YOLOv8 [23], a real-time object detection framework renowned for its high accuracy and processing speed, is used for this localization. The fundus image's OD and OC are identified, and each region is given a bounding box. To separate the optic disk, optic cup, and neuroretinal rim, these localized areas are subsequently run through a segmentation module. Once the regions of interest are segmented, the images passed to the feature extraction stage. This method uses a pre-trained ResNet50 convolutional neural network [24] to extract deep visual features from the segmented regions. This network successfully catches intricate patterns that are important for classifying glaucoma. The ResNet50, with its 50-layer residual architecture, is capable of capturing complex hierarchical patterns and subtle structural variations that are not easily discernible through traditional image analysis. These learned features represent the retinal morphology in a high-dimensional space suitable for robust classification. The classification is performed based on the discriminative patterns learned during training, with the aim of accurately identifying the presence of glaucomatous features. The classification output forms the basis for clinical interpretation, supporting ophthalmologists in early glaucoma detection and patient management.

More formally, the model can be represented as follows. Let the retinal fundus image be denoted as: $\mathrm{R_F}(x, y, I)$ where x and y represent the spatial coordinates and I denotes the intensity value. Thus, the image $\mathrm{R_F}$ can be considered as, $\mathrm{R_F} \in \mathbb{R}^{H \times W \times C}$, where $0 < x < H$ and $0 < y < W$ denote the height and width of the image respectively, and C is the number which is 3 (R, G, B) for color images.

Now, YOLOv8 is employed for the detection of ROI that includes OD, OC and neuroretinal rim within the fundus image as follows,

$$\mathrm{B} = \mathrm{Y}(\mathrm{R_F})$$

where Y is the detection model, and B is the resulting set of bounding boxes, *i.e.*,

$$\mathbf{b}_i = (x_i, y_i, w_i, h_i, c_i, s_i) \quad \text{for } i = 1, 2, \ldots, N$$

for all fundus images. Each bounding box $\mathbf{b}_i$ includes the center coordinates (x_i, y_i), width w_i, height h_i, class label $c_i \in \{\mathrm{OD}, \mathrm{OC}\}$, and confidence score of prediction $s_i \in [0, 1]$ for OD or OC. The detected bounding boxes specific to the OD and OC are extracted, respectively as follows,

$$\mathrm{B_{OD}} = \{\mathbf{b}_i \in \mathrm{B} \mid c_i = \mathrm{OD}\}, \quad \mathrm{B_{OC}} = \{\mathbf{b}_i \in \mathrm{B} \mid c_i = \mathrm{OC}\}$$

Now segmentation is applied within each bounding box to extract the precise regions corresponding to the OD and OC, *i.e.*,

$$\Omega_{\mathrm{OD}} = \Psi_{\mathrm{seg}}(\mathrm{R_F} \mid \forall \mathbf{b}_i \in \mathbf{B}_{\mathrm{OD}}), \quad \Omega_{\mathrm{OC}} = \Psi_{\mathrm{seg}}(\mathrm{R_F} \mid \forall \mathbf{b}_i \in \mathbf{B}_{\mathrm{OC}})$$

where $\Psi_{\mathrm{seg}}(\cdot)$ is the segmentation function applied within the spatial bounds of each detected region. The outputs Ω_{OD} and Ω_{OC} denote the sets of pixels belonging to the segmented OD and OC regions, respectively. Therefore, the area of their respective segmented regions are $|\Omega_{\mathrm{OD}}|$ and $|\Omega_{\mathrm{OC}}|$ and the CDR, a clinically significant metric used for glaucoma diagnosis can be computed as, $\frac{|\Omega_{\mathrm{OC}}|}{|\Omega_{\mathrm{OD}}|}$.

The next stage of the proposed model utilizes a pretrained ResNet50 network for feature extraction and classification. Therefore, let Φ_{ResNet50} represent the feature extraction component of the pretrained ResNet50 model, excluding its final classification layer. The deep feature vector $\mathbf{f}$ is extracted from the ROI as follows:

$$\mathbf{f} = \Phi_{\mathrm{ResNet50}}(\mathcal{R})$$

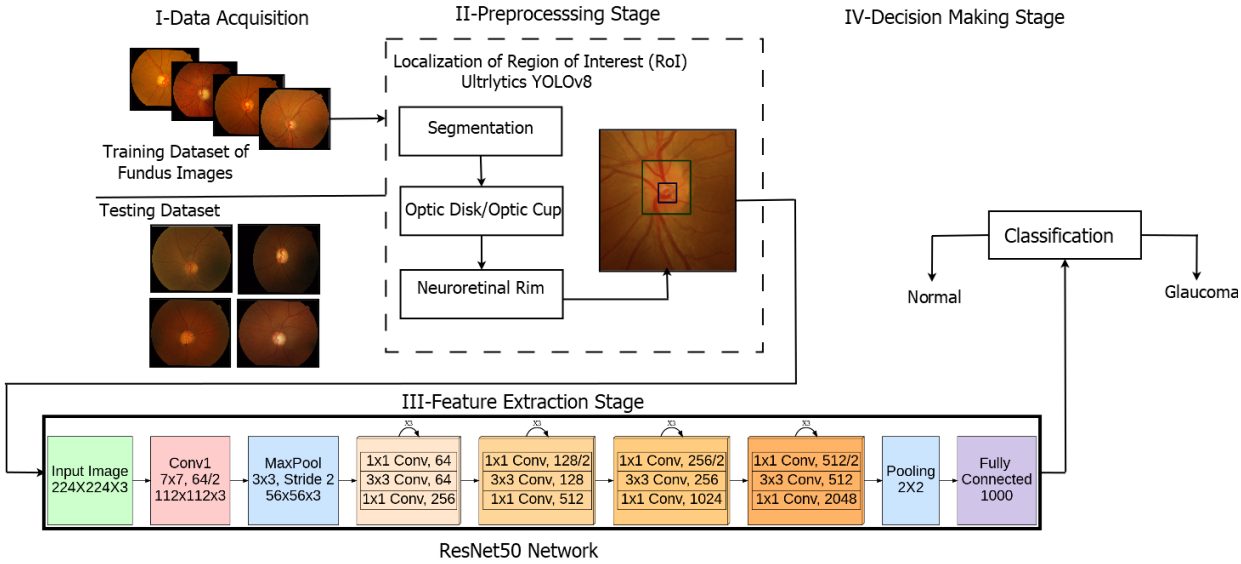

Fig. 2: Schematic of proposed model of glaucoma detection utilizing Yolo and ResNet50 from retinal fundus images.

where $\mathcal{R}$ is the ROI image region and $\mathbf{f} \in \mathbb{R}^d$. The extracted feature vector $\mathbf{f}$ is passed to a classification function Ψ_{cls}, which maps the feature space to a binary label:

$$\hat{y} = \Psi_{\text{cls}}(\mathbf{f}) = \begin{cases} 1 : \text{Glaucomatous}; & \text{if } P(y = 1 \mid \mathbf{f}) \geq \tau \\ 0 : \text{Normal}; & \text{otherwise} \end{cases}$$

where τ is the classification threshold, typically set to 0.5.

III. Environmental Setup

A. Software and Working Environment

The system was implemented on the Google Colaboratory (Colab) platform, a cloud-based Jupyter notebook environment providing access to high-performance computing resources, including GPUs and TPUs. This environment supports Python-based deep learning frameworks such as TensorFlow and PyTorch, as well as image processing libraries.

1) Software Stack:

- **Python 3.8**: Primary programming language.
- **TensorFlow 2.x and PyTorch**: Deep learning frameworks.
- **YOLOv8**: Object detection for ROI localization.
- **ResNet50**: Feature extraction from segmented OD and OC.
- **OpenCV, NumPy, Pandas**: Image processing and data handling.
- **Matplotlib, Seaborn**: Visualization of results.

2) Hardware Configuration:

- **CPU**: Intel Xeon, 2 virtual CPUs, 13 GB RAM.
- **GPU**: NVIDIA Tesla T4/A100 for accelerated model training.
- **TPU**: Available as an alternative when GPU resources are unavailable.

3) Environment Setup: The Colab environment was initialized with Python 3.8 runtime and GPU acceleration enabled. Required libraries were installed via pip, and datasets were accessed through Google Drive. The YOLOv8 model performed robust ROI detection, followed by ResNet50-based feature extraction and classification.

IV. Experimental Results

The proposed automated model for glaucoma detection is assessed using standard evaluation metrics, like, accuracy, sensitivity, and specificity. The confusion matrix, which consists of the following elements, is the source of these metrics: False Positives (FP) are cases of non-glaucoma that are mistakenly classified as glaucoma; False Negatives (FN) are cases of glaucoma that are mistakenly classed as non-glaucoma; True Positives (TP) are cases of glaucoma that the model accurately recognized; and True Negatives (TN) are cases of non-glaucoma that were correctly classified. These numbers offer a thorough comprehension of the diagnostic efficacy of the model. For example, Accuracy is the overall proportion of correctly classified instances, *i.e.*, Accuracy $= \frac{TP+TN}{TP+TN+FP+FN}$. Sensitivity is the true positive rate, *i.e.*, Sensitivity $= \frac{TP}{TP+FN}$. Specificity is the true negative rate, *i.e.*, Specificity $= \frac{TN}{TN+FP}$. Precision is the proportion of predicted glaucoma cases that are actually glaucoma, *i.e.*, Precision $= \frac{TP}{TP+FP}$ and The F1-score represents the harmonic mean of recall and precision, *i.e.*, $F1 - \text{Score} = 2 \times \frac{\text{Precision} \times \text{Sensitivity}}{\text{Precision} + \text{Sensitivity}}$.

The suggested model is validated using the publicly accessible benchmark datasets *e.g.*, DRISHTI-GS, ORIGA, and G1020 of retinal pictures that contain both normal and glaucomatous eyes. The retinal fundus images in the DRISHTI-GS collection were taken from 101 different participants [25]. It contains 70 normal photos and 31 glaucoma images. There are 650 color fundus photos from 482 people in the ORIGA collection. It has 168 retinal images marked as glaucoma and

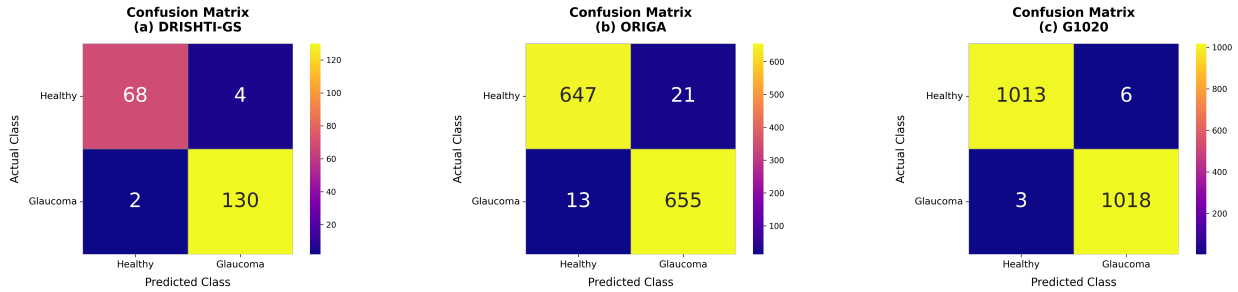

Fig. 3: Confusion matrix for data validation on (a) DRISHTI-GS, (b) ORIGA and (c) G1020 datasets.These results corroborate the quantitative findings summarized in Table II, where the proposed method achieved accuracies of 97.06%, 97.46%, and 99.56% on the DRISHTI-GS, ORIGA, and G1020 datasets, respectively, demonstrating its robustness and strong generalization capability across diverse data sources.

482 images as normal or no glaucoma [26]. The G1020 dataset contains 1020 color fundus images from 1016 unique subjects [27]. Among the total images, 278 are labeled as glaucoma and 742 as normal.This resource contributes significantly to the design and performance assessment of systems aimed at automating glaucoma detection.

In order to utilize the power of YOLOv8 and ResNet50 models we need a large and diverse datasets. Therefore, all datasets used in this experiment are augmented. Further, it improves model generalization and prevents overfitting. The YOLOv8 model segments the normal and glaucomatous eyes robustly that are shown in Fig. 4. The proposed model works on the segmented region using ResNet50 that achieves robust performance on the datasets used in this experiment are shown in Table II. For example, model reports the accuracy 97.06%, sensitivity 97.14%, specificity 97.01% and F1-score 95.77% on DRISHTI-GS dataset. Similarly, model outperforms on other benchmark dataset ORIGA and reports accuracy 97.46%, sensitivity 98.03%, specificity 96.89% and F1-score 97.44%. The most accurate outcomes in glaucoma identification are reported on G1020 dataset with an accuracy 99.56%, sensitivity 99.70%, specificity 99.41% and F1-score 99.56%.

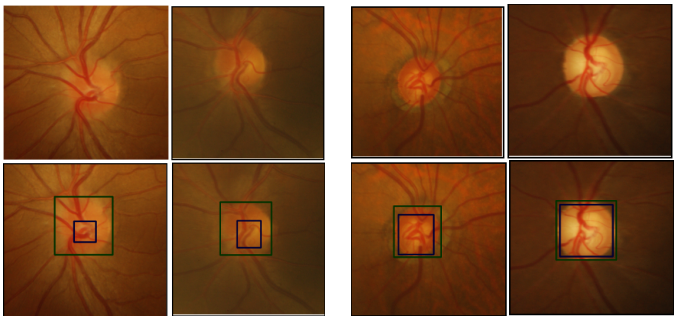

(a) (b)

Fig. 4: Segmented fundus images utilizing YOLOv8 model (a) normal and (b) glaucomatous eyes.

The confusion matrix (refer to 3) is employed to assess the model's capability to distinguish between glaucomatous and normal eyes. Confusion matrices for each dataset provide detailed insights into the model's classification performance, highlighting true and false predictions across all cases. These results are found to be optimum in comparison to other known methods for glaucoma detection from retinal fundus images reported to date.

TABLE II: PERFORMANCE OF GLAUCOMA DETECTION USING DIFFERENT DATASETS

Datasets	Accuracy (%)	Sensitivity (%)	Specificity (%)	F1-Score (%)
DRISHTI-GS	97.06	97.14	97.01	95.77
ORIGA	97.46	98.03	96.89	97.44
G1020	99.56	99.70	99.41	99.56

V. Conclusion

The present study uses retinal fundus images for glaucoma detection in an efficient and automated deep learning-based method. For accurate segmentation and classification, respectively, the suggested approach combines the strengths of two potent models: ResNet50 and Yolov8. The diagnosis of glaucoma, a progressive visual neuropathy, is frequently made by closely examining fundus pictures involving the neuroretinal rim, optic cup, and optic disc. Accurately segmenting these important anatomical features from fundus pictures using the YOLOv8 model speeds up this diagnostic procedure. By assisting in the isolation of the region of interest (ROI), it makes sure that the following categorization is concentrated on the most pertinent regions for the glaucoma screening. Deep ResNet50 features are used from the segmented ROIs using a pre-trained network after segmentation. These characteristics are crucial for differentiating between healthy and glaucomatous eyes. Complex spatial patterns and textures in the ROI that are suggestive of disease are captured by the ResNet50 model, which is renowned for its deep architecture and residual connections. Three commonly used benchmark datasets in ophthalmic research—Drishti-GS, ORIGA, and G1020—are used to validate the model effectiveness.

The resilience and generalization capacity of the suggested model are confirmed by its high classification accuracy across all datasets. This system provides a scalable alternative for early-stage glaucoma screening, particularly in situations with

limited resources, in addition to helping to lessen the manual strain on ophthalmologists. This system's ability to combine precise segmentation and effective classification makes it a viable tool for automated, real-time glaucoma diagnosis, which will enhance clinical processes and improve patient outcomes in the field of eye care.

VI. Future Work

Although the proposed automated glaucoma detection system demonstrates high accuracy and robust performance across multiple benchmark datasets, there remain several directions for future improvement. Incorporating multi-modal imaging data, such as optical coherence tomography (OCT) and visual field measurements, could enhance early-stage glaucoma detection. Efforts to develop lightweight and optimized versions of YOLOv8 and ResNet50 would facilitate real-time deployment on mobile and edge devices, making the system accessible in resource-constrained environments. Additionally, integrating explainable AI techniques could provide clinicians with interpretable insights into model decisions, thereby increasing trust and clinical adoption. Longitudinal analysis using sequential retinal images could enable the monitoring of glaucoma progression over time, supporting better treatment planning. Expanding the training dataset to include diverse populations, varying imaging conditions, and rare glaucoma subtypes would further improve the model's generalization. Addressing these aspects would enhance the clinical applicability, scalability, and transparency of automated glaucoma detection, ultimately contributing to earlier intervention and improved patient outcomes.

References

[1] Allison K, Patel D, Alabi O., "Epidemiology of Glaucoma: The Past, Present, and Predictions for the Future," Cureus. 12, 11, 2020.

[2] Christophe Baudouin, Miriam Kolko, Stéphane Melik-Parsadaniantz, Elisabeth M. Messmer, "Inflammation in Glaucoma: From the back to the front of the eye, and beyond, Progress in Retinal and Eye Research", 83, 2021, 100916.

[3] Imrie C, Tatham AJ. Br J, "Glaucoma: the patient's perspective," Gen Pract. 2016;66:0–373. doi: 10.3399/bjgp16X685165

[4] Kingman, Sharon, "Glaucoma is second leading cause of blindness globally," Bulletin of the World Health Organization, 82, 11, pp. 887–888, 2004.

[5] Quigley H A, Broman A T, "The number of people with glaucoma world wide in 2010 and 2020," Br J Ophthalmology, 90, pp. 262–267, 2006.

[6] Tham YC, Li X, Wong TY, Quigley HA, Aung T, Cheng CY,"Global prevalence of glaucoma and projections of glaucoma burden through 2040: A systematic review and meta-analysis," Ophthalmology, 121, pp. 2081–90, 2014.

[7] Seth, Praveen Kumar1; Senthil, Sirisha1; Das, Anthony Vipin2,3; Garudadri, Chandrasekar1, "Prevalence of glaucoma types, clinical profile and disease severity at presentation: Tertiary Institute based cross-sectional study from South India," Indian Journal of Ophthalmology, 71, 10, pp. 3305–3312, 2023.

[8] National blindness and visual impairment survey India 2015-2019: A summary report. [Accessed on 2025 April]. Available from: https://npcbvi.gov.in/writereaddata/mainlinkfile/file341.pd

[9] Glaucoma: The silent thief of sight that affects millions, The New Indian Express, 26 March 2024. Online Available: https://www.newindianexpress.com/cities/kochi/2024/Mar/26/glaucoma-the-silent-thief-of-sight-that-affects-millions

[10] Mark Benesia, "A practical guide to measuring optic disc size and its clinical correlation in diagnosing Glaucoma for the eye care professional," Science Open Preprints, 2023.

[11] Kim, Y., Yun, Y., Choi, H., "Screening fundus photography predicts and reveals risk factors for glaucoma conversion in eyes with large optic disc cupping," Sci Rep, 13, 81, 2023.

[12] Quigley HA, Brown AE, Morrison JD, Drance SM,"The Size and Shape of the Optic Disc in Normal Human Eyes,"Arch Ophthalmol, 108, 1, pp. 51–57, 1990.

[13] Laowanapiban P, Sathianvichitr K, Chirapapaisan N,"Structural and functional differentiation between compressive and glaucomatous optic neuropathy," Scientific Reports, 12, pp. 1–12, 2022.

[14] Rajpurkar, P., Chen, E., Banerjee, O. *et al.*, "AI in health and medicine," Nat Med, 28, pp. 31–38, 2022.

[15] Fan, Z. *et al.*, "Optic disk detection in fundus image based on structured learning," IEEE J. Biomed. Health Inform., 22, pp. 224–234, 2018.

[16] Li Z, He Y, Keel S, Meng W, Chang RT, He M,"Efficacy of a deep learning system for detecting glaucomatous optic neuropathy based on color fundus photographs," Ophthalmology, 125, 8, pp. 1199–1206, 2018.

[17] Diaz-Pinto, A., Morales, S., Naranjo, V. *et. al,*, "CNNs for automatic glaucoma assessment using fundus images: an extensive validation," BioMed Eng OnLine, 18, 29, 2019.

[18] Septiarini, A., Khairina, D. M., Kridalaksana, A. H., Hamdani H., "Automatic glaucoma detection method applying a statistical approach to fundus images,"Healthc. Inform. Res., 24, 1, pp. 53–60, 2018.

[19] Sreng S, Maneerat N, Hamamoto K, Win KY, "Deep Learning for Optic Disc Segmentation and Glaucoma Diagnosis on Retinal Images," Applied Sciences, 10, 14, 4916, 2020.

[20] Lin, M., Hou, B., Liu, L. *et al.,*, "Automated diagnosing primary open-angle glaucoma from fundus image by simulating human's grading with deep learning," Sci Rep, 12, 14080, 2022.

[21] Saha, S., Vignarajan, J., Frost S.,"A fast and fully automated system for glaucoma detection using color fundus photographs," Sci Rep, 13, 18408, 2023.

[22] Fan R, Alipour K, Bowd C, Mark C *et al.*, "Detecting Glaucoma from Fundus Photographs Using Deep Learning without Convolutions: Transformer for Improved Generalization," Ophthalmology Science, 3, 1, 2023, 100233.

[23] Dillon Reis, Jordan Kupec, Jacqueline Hong, Ahmad Daoudi, "Real-Time Flying Object Detection with YOLOv8," Online Available: https://arxiv.org/abs/2305.09972

[24] K. He, X. Zhang, S. Ren and J. Sun, "Deep Residual Learning for Image Recognition," 2016 IEEE Conference on Computer Vision and Pattern Recognition (CVPR), Las Vegas, USA, pp. 770–778, 2016.

[25] J. Sivaswamy, S. R. Krishnadas, G. Datt Joshi, M. Jain and A. U. Syed Tabish, "Drishti-GS: Retinal image dataset for optic nerve head (ONH) segmentation," 2014 IEEE 11th International Symposium on Biomedical Imaging (ISBI), Beijing, China, 2014, pp. 53–56.

[26] Z. Zhang, F.S. Yin, J. Liu, W. K. Wong, N. M. Tan, B. H. Lee, J. Cheng, and T. Y. Wong, "ORIGA-light: An online retinal fundus image database for glaucoma analysis and research," in Proc 2010 Annual Intl Conference of the IEEE Engineering in Medicine and Biology Society (EMBC), Buenos Aires, Argentina, 2010, pp. 3065–3068.

[27] M. N. Bajwa, G. A. P. Singh, W. Neumeier, M. I. Malik, A. Dengel and S. Ahmed, "G1020: A Benchmark Retinal Fundus Image Dataset for Computer-Aided Glaucoma Detection," 2020 International Joint Conference on Neural Networks (IJCNN), Glasgow, UK, 2020, pp. 1–7.