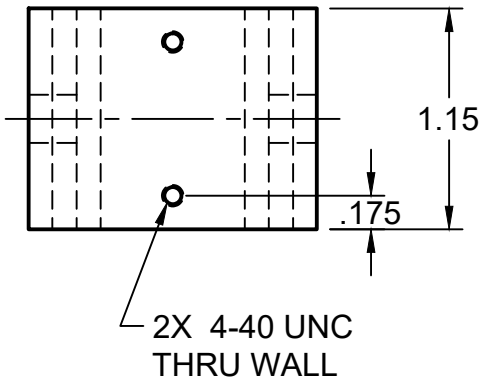

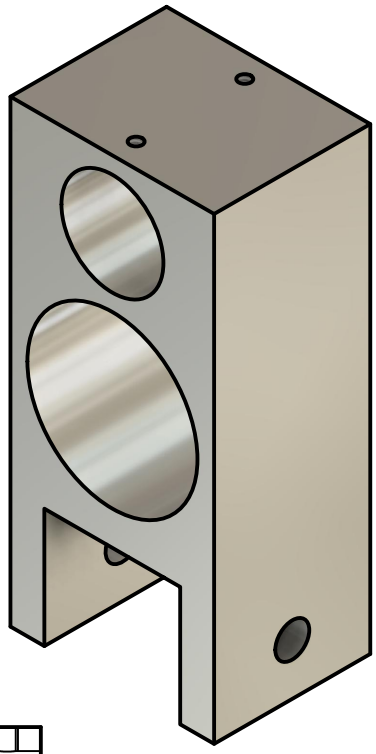

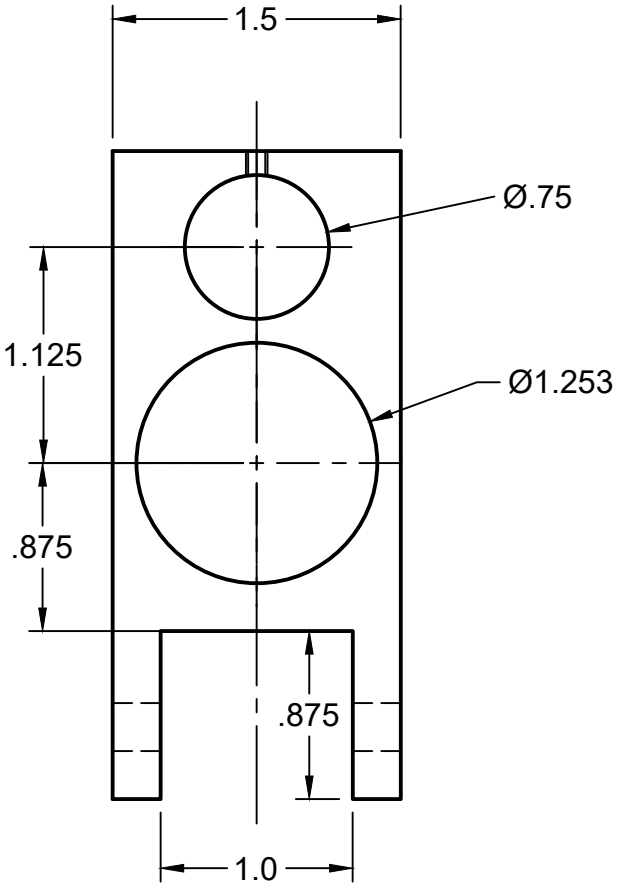

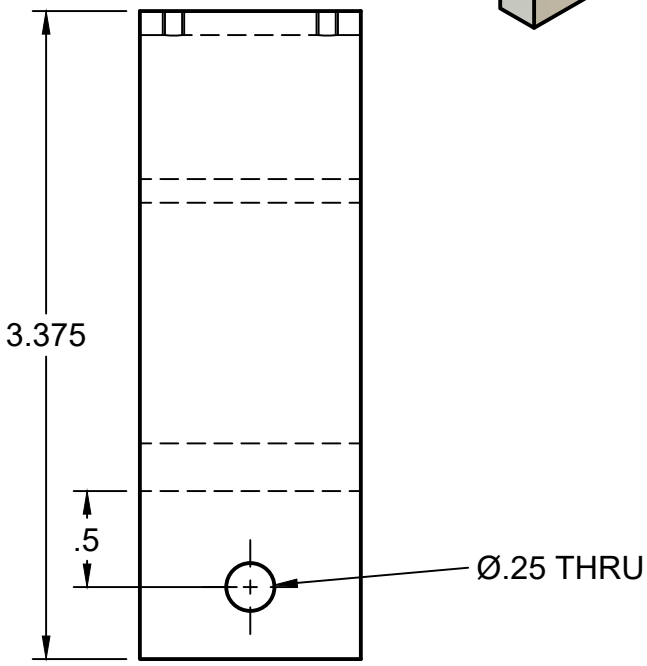

	PROJECT Penetrometer			
	TITLE Double Bearing Mount Material: Aluminum - All Measurements in Inches			
APPROVED	SIZE	CODE	DWG NO	REV
CHECKED	A			
DRAWN Thomas Brachmann 2/20/2024	SCALE 1:1	WEIGHT	SHEET 1/1	