Mazda6 F/L
Mazda6 MPS
Wiring Diagram

CONTENTS

TITLE	SECTION	
	PREVIOUS	NEW
GENERAL INFORMATION	GI (GENERAL INFORMATION)	00
	W (ELECTRICAL WIRING SCHEMATIC)	
	FB (FUSE BLOCK)	
	JB (JOINT BOX)	
	X (COMMON CONNECTOR)	
	Y (GROUND POINT)	
	SYSTEM CIRCUIT DIAGRAM/CONNECTOR LOCATIONS: U (DATA LINK CONNECTOR)	
ENGINE	A (CHARGING SYSTEM/ STARTING SYSTEM)	01
	B (ENGINE CONTROL SYSTEM)	
	Q (CRUISE CONTROL SYSTEM)	
SUSPENSION	—	02
DRIVELINE/AXLE	—	03
BRAKES	O (ANTI-LOCK BRAKE SYSTEM)	04
TRANSMISSION/ TRANSAXLE	H (EC-AT CONTROL SYSTEM)	05
STEERING	N (ELECTRIC POWER STEERING SYSTEM)	06
HEATER, VENTILATION & AIR CONDITIONING (HVAC)	G (AIR CONDITIONING SYSTEM)	07
RESTRAINTS	S (SEAT BELT/AIR BAG SYSTEM)	08
BODY & ACCESSORIES	C (GAUGE CONTROL SYSTEM)	09
	D (WIPER SYSTEM)	
	E (EXTERIOR LIGHTING SYSTEM)	
	F (SIGNAL SYSTEM)	
	I (INTERIOR LIGHTING SYSTEM)	
	J (AUDIO SYSTEM)	
	K (DOOR/WINDOW SYSTEM)	
	L (MIRROR SYSTEM)	
	M (SUNROOF SYSTEM)	
	P (POWER SEAT SYSTEM)	
	T (SECURITY AND LOCKS SYSTEM/OPTION)	
ALPHABETICAL INDEX	AI (ALPHABETICAL INDEX)	AI

FOREWORD

This wiring diagram incorporates the wiring schematics of the Mazda 6 F/L and available optional equipment. Actual vehicle wiring may vary slightly depending on optional equipment or local specifications, or both.

For proper repair and maintenance, a thorough familiarization with this manual is important, and it should always be kept in a handy place for quick and easy reference.

All the contents of this manual, including drawings and specifications, are the latest available at the time of printing.
As modifications affecting repair or maintenance occur, relevant information supplementary to this volume will be made available at Mazda dealers. This manual should be kept up-to-date.

Mazda Motor Corporation reserves the right to alter the specifications and contents of this manual without obligation or advance notice.

All rights reserved. No part of this book may be reproduced or used in any form or by any means, electronic or mechanical-including photocopying and recording and the use of any kind of information storage and retrieval system-without permission in writing.

Mazda Motor Corporation
HIROSHIMA, JAPAN

© **Mazda Motor Corporation**

APPLICATION:
This manual is applicable to vehicles beginning with the Vehicle Identification Numbers (VIN) shown on the following page.

https://www.MyCarManual.com

VEHICLE IDENTIFICATION NUMBERS (VIN)
(CHASSIS NUMBERS)

JMZ GG1**# 600001-**
JMZ GG8**# 600001-**
JMZ GY1**# 400001-**
JMZ GY8**# 400001-**

https://www.MyCarManual.com

ELECTRICAL WIRING SCHEMATIC (EXCEPT MZR-CD(RF Turbo))

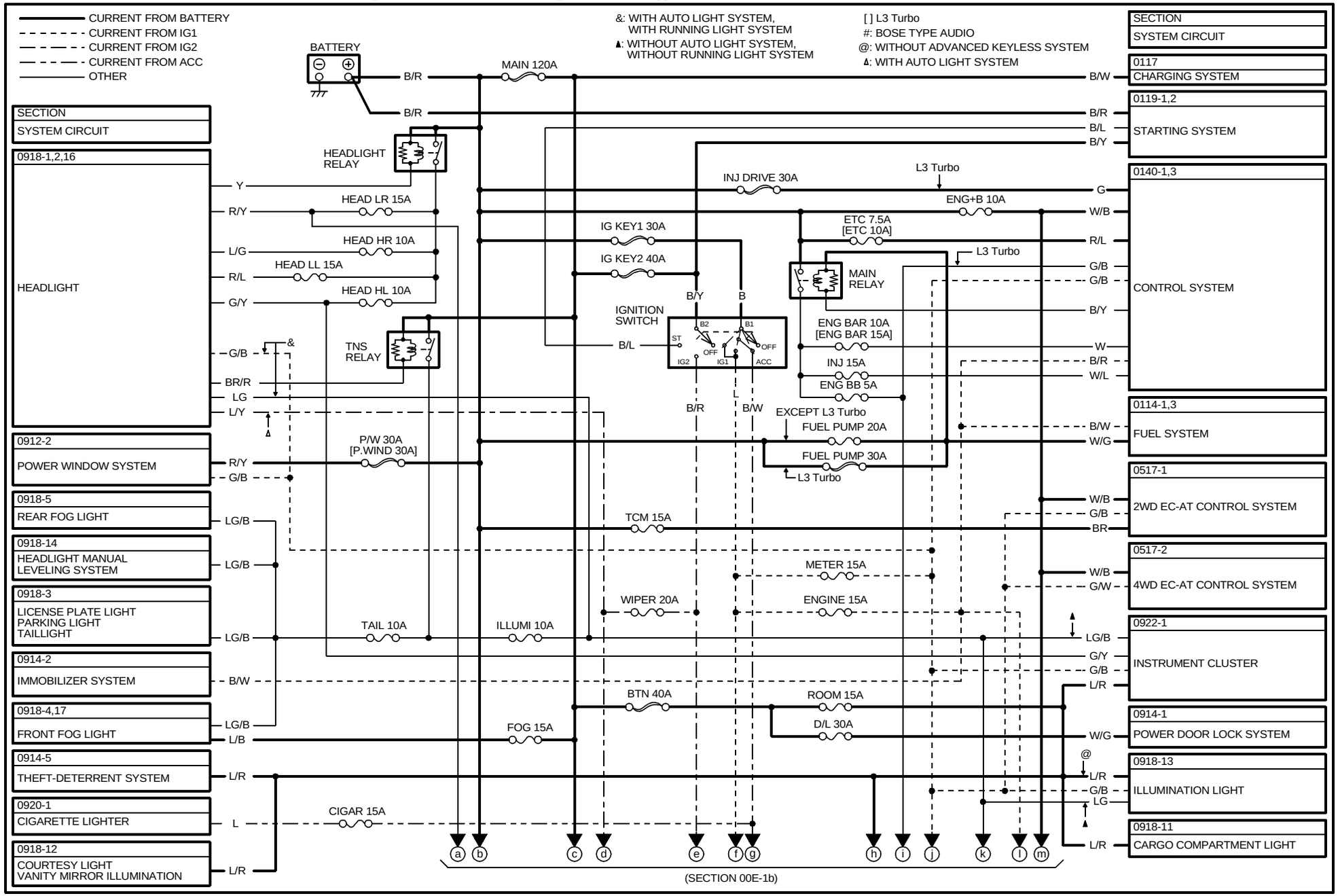

ELECTRICAL WIRING SCHEMATIC (EXCEPT MZR-CD(RF Turbo))

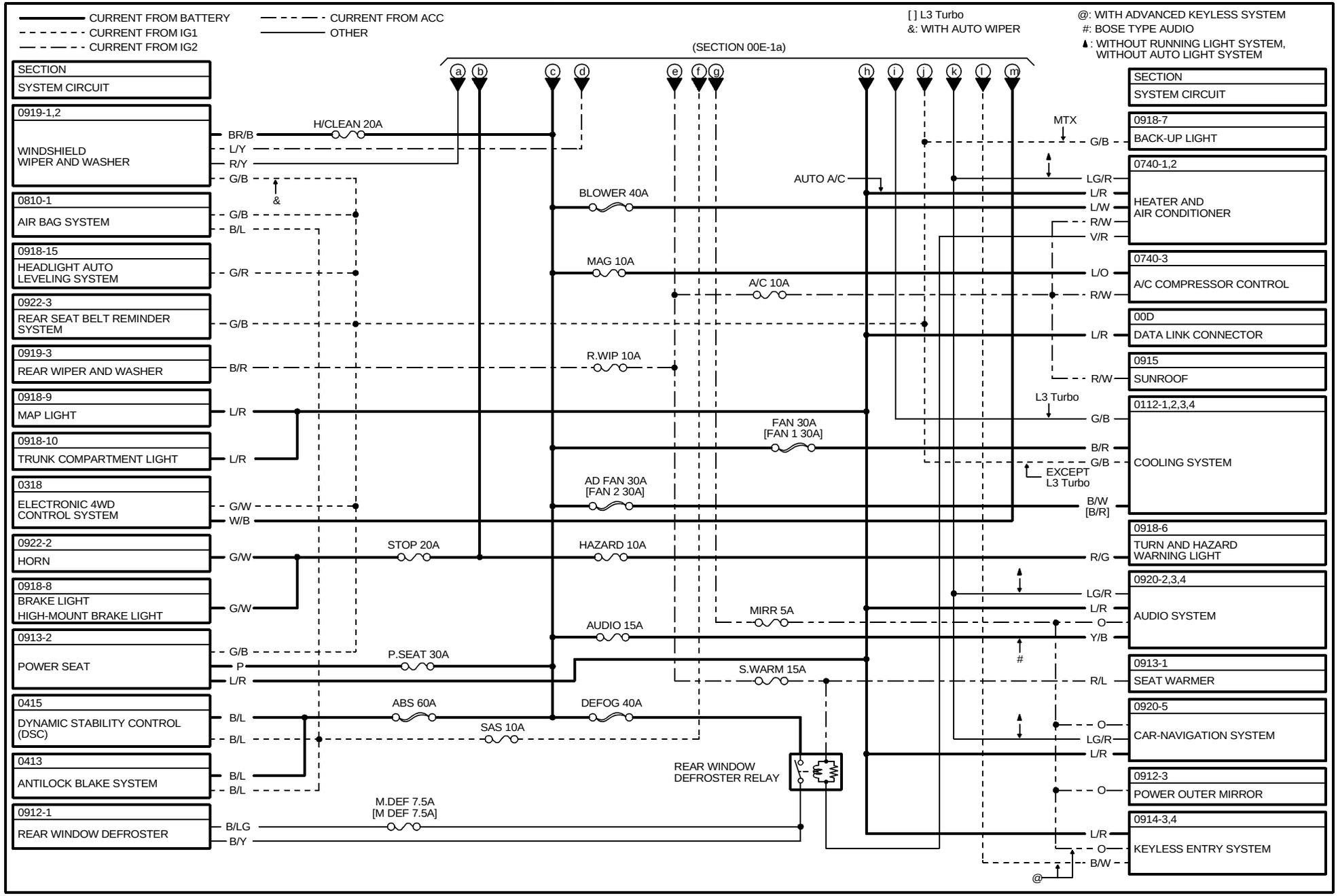

ELECTRICAL WIRING SCHEMATIC (MZR-CD (RF Turbo))

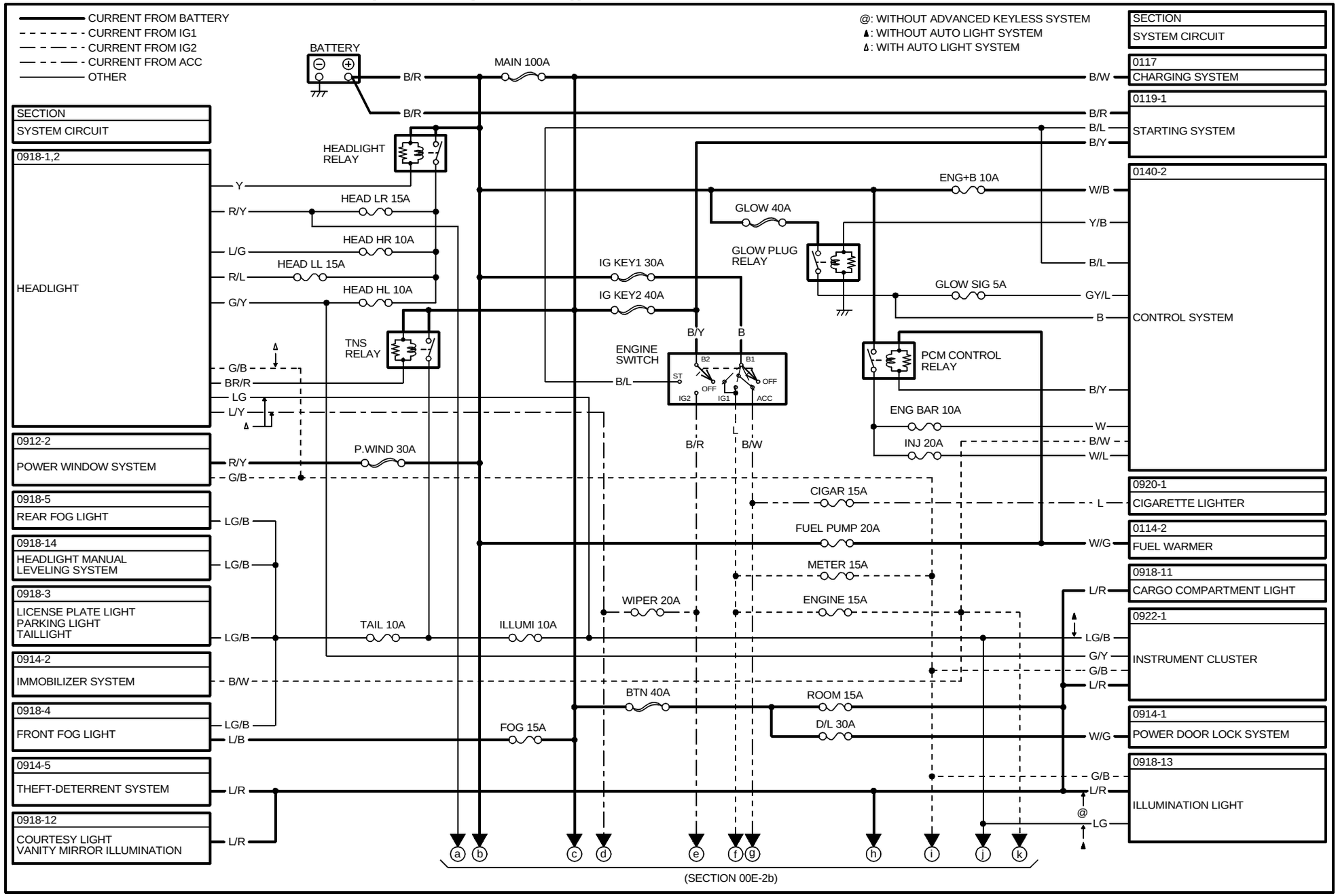

ELECTRICAL WIRING SCHEMATIC (MZR-CD (RF Turbo))

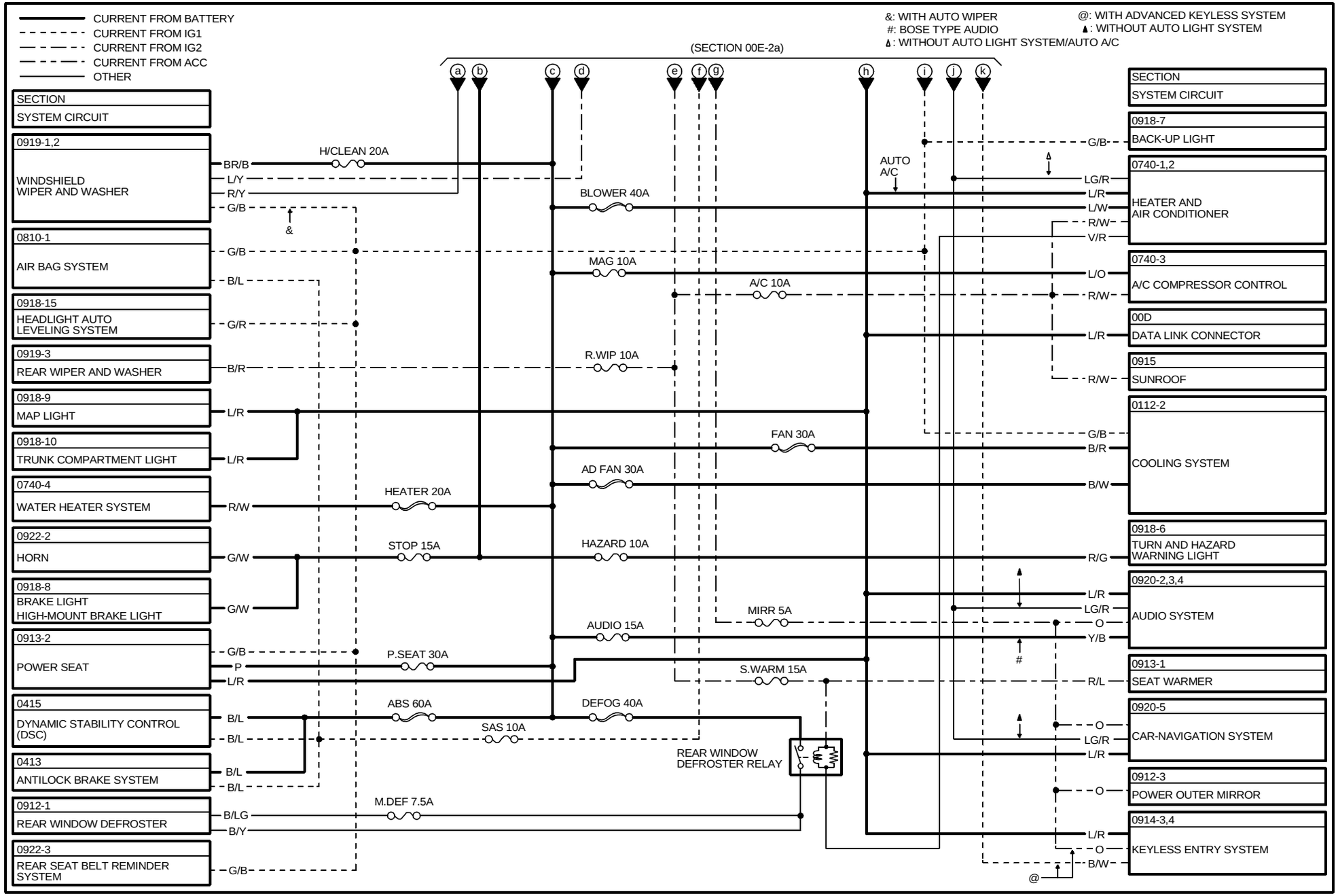

FUSE BOX

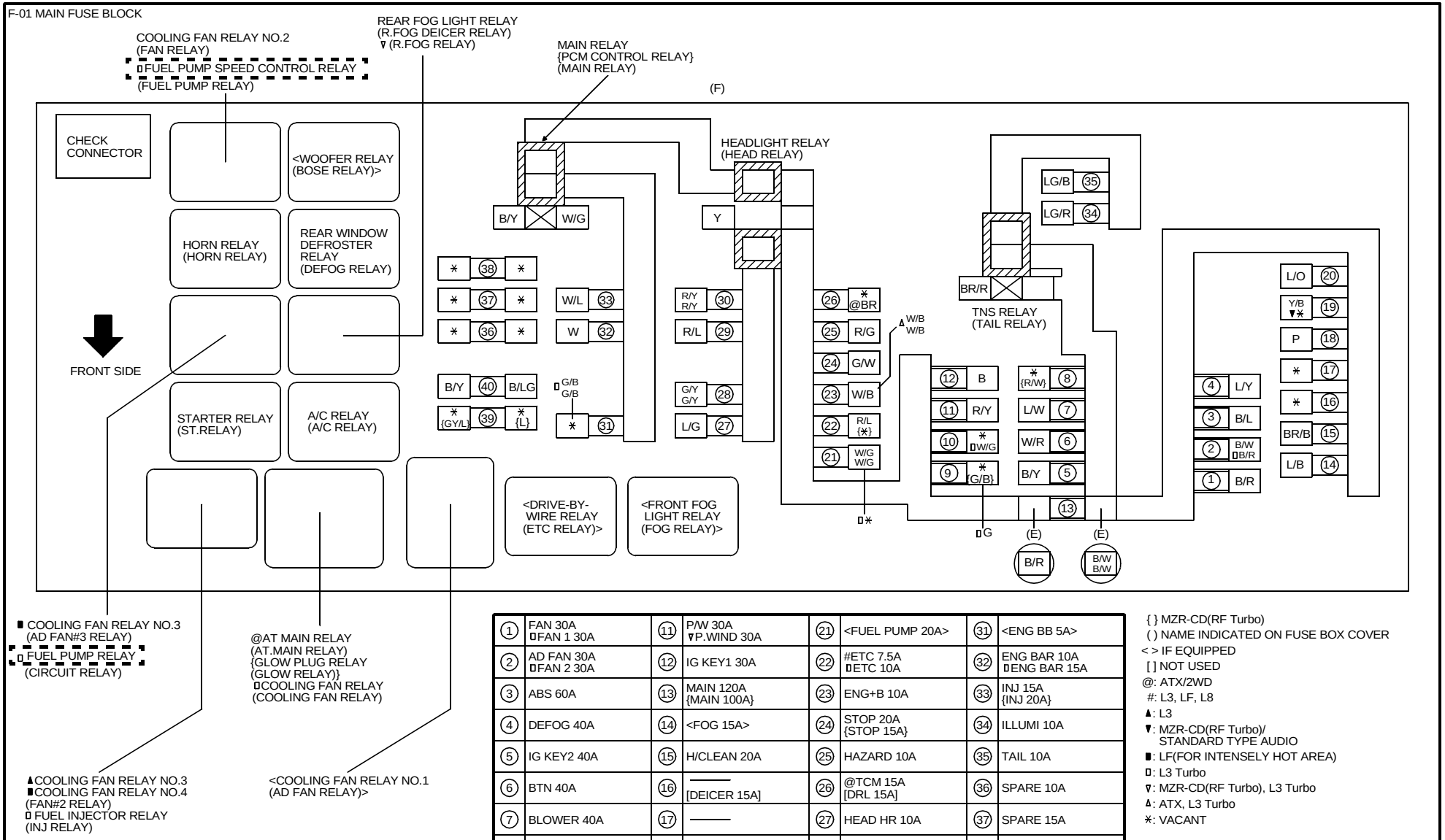

1	FAN 30A ▯FAN 1 30A	11	P/W 30A ▽P.WIND 30A	21	<FUEL PUMP 20A>	31	<ENG BB 5A>
2	AD FAN 30A ▯FAN 2 30A	12	IG KEY1 30A	22	#ETC 7.5A ▯ETC 10A	32	ENG BAR 10A ▯ENG BAR 15A
3	ABS 60A	13	MAIN 120A {MAIN 100A}	23	ENG+B 10A	33	INJ 15A {INJ 20A}
4	DEFOG 40A	14	<FOG 15A>	24	STOP 20A {STOP 15A}	34	ILLUMI 10A
5	IG KEY2 40A	15	H/CLEAN 20A	25	HAZARD 10A	35	TAIL 10A
6	BTN 40A	16	—— [DEICER 15A]	26	@TCM 15A [DRL 15A]	36	SPARE 10A
7	BLOWER 40A	17	——	27	HEAD HR 10A	37	SPARE 15A
8	<HEATER 20A>	18	<P.SEAT 30A>	28	HEAD HL 10A	38	SPARE 20A
9	<GLOW 40A> ▯INJ DRIVE 30A	19	<AUDIO 15A>	29	HEAD LL 15A	39	<GLOW SIG 5A>
10	<FUEL PUMP 30A>	20	MAG 10A	30	HEAD LR 15A	40	M.DEF 7.5A ▯M DEF 7.5A

{ } MZR-CD(RF Turbo)
( ) NAME INDICATED ON FUSE BOX COVER
< > IF EQUIPPED
[ ] NOT USED
@: ATX/2WD
#: L3, LF, L8
▲: L3
▼: MZR-CD(RF Turbo)/ STANDARD TYPE AUDIO
■: LF(FOR INTENSELY HOT AREA)
▯: L3 Turbo
▽: MZR-CD(RF Turbo), L3 Turbo
△: ATX, L3 Turbo
*: VACANT

https://www.MyCarManual.com

FUSE BOX

F-02 FUSE BLOCK

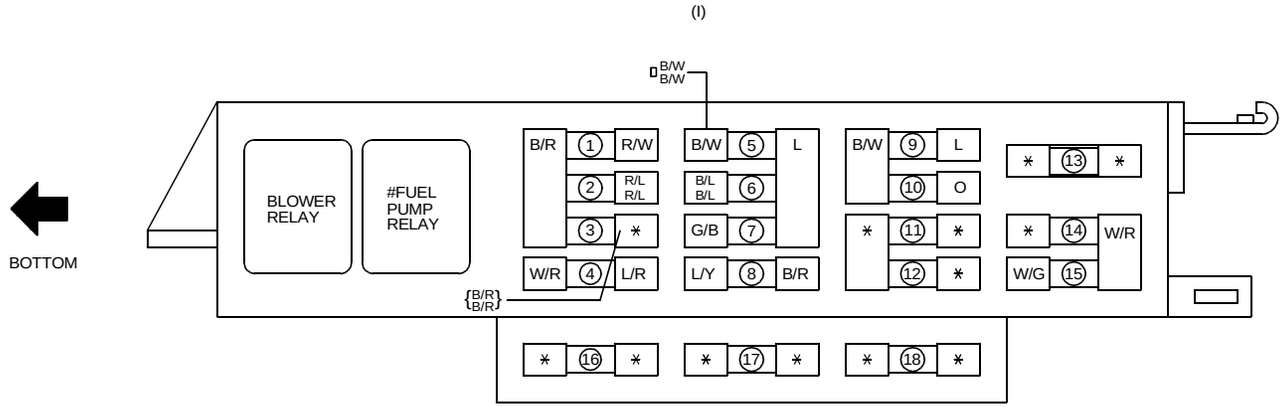

1	A/C 10A	10	MIRR 5A
2	S.WARM 15A	11	———
3	#R.WIP 10A	12	———
4	ROOM 15A	13	<IG1 P/W 30A>
5	ENGINE 15A	14	<P/W 20A>
6	SAS 10A	15	D/L 30A
7	METER 15A	16	SPARE 20A
8	WIPER 20A	17	SPARE 15A
9	CIGAR 15A	18	SPARE 10A

{ } WITH REAR WIPER AND WASHER
< > NOT USED
#: IF EQUIPPED
▯: L3 Turbo
*: VACANT

GROUND POINT

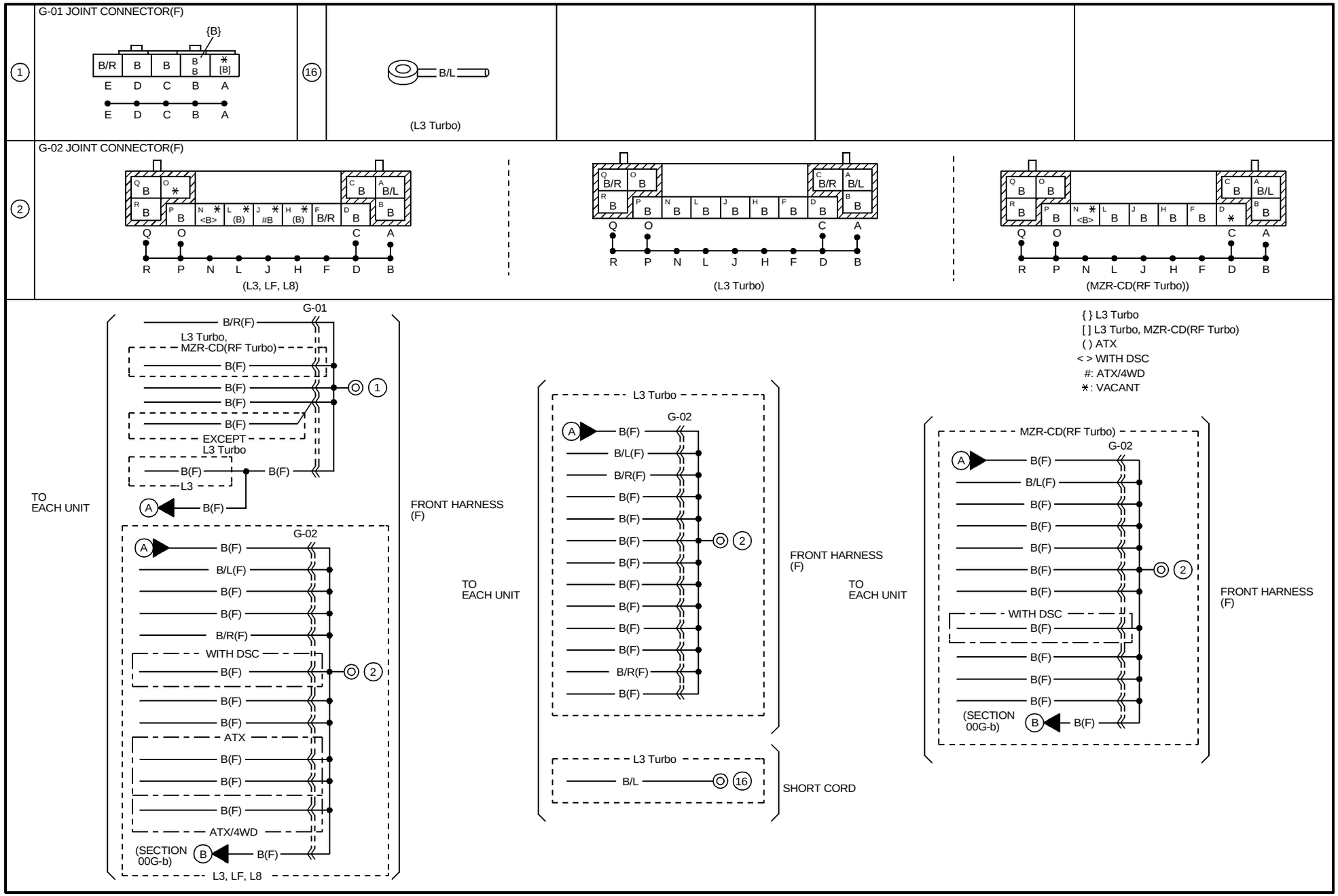

HARNESS SYMBOL : (F) (E) (D) (R)

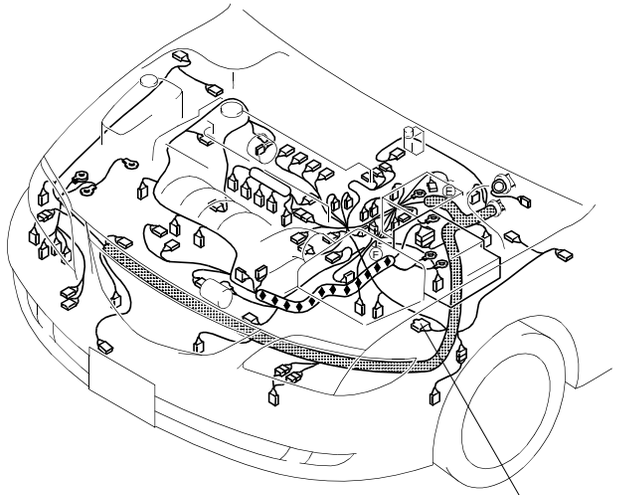

[EXCEPT L3 Turbo]

1
G-01

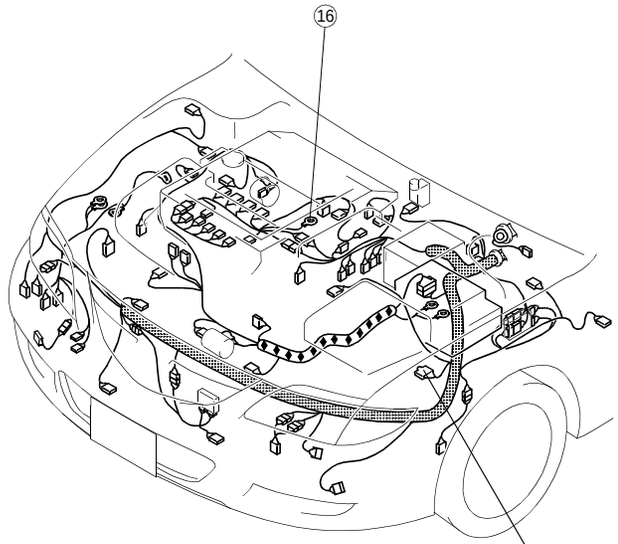

[L3 Turbo]

1
G-01

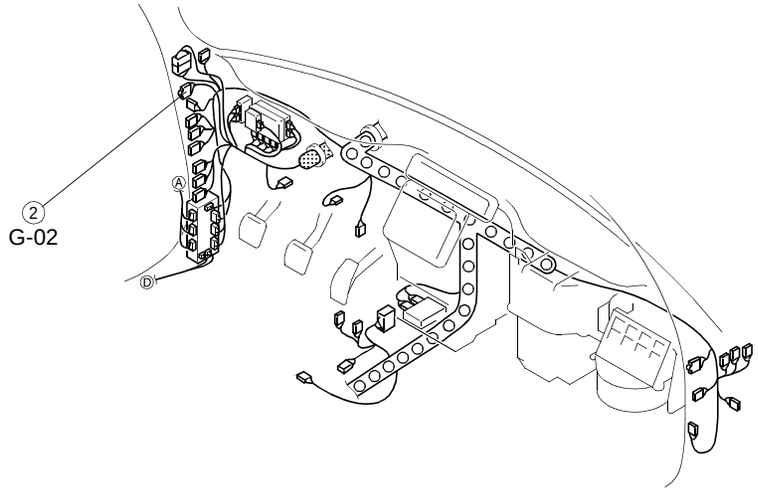

2
G-02

GROUND POINT

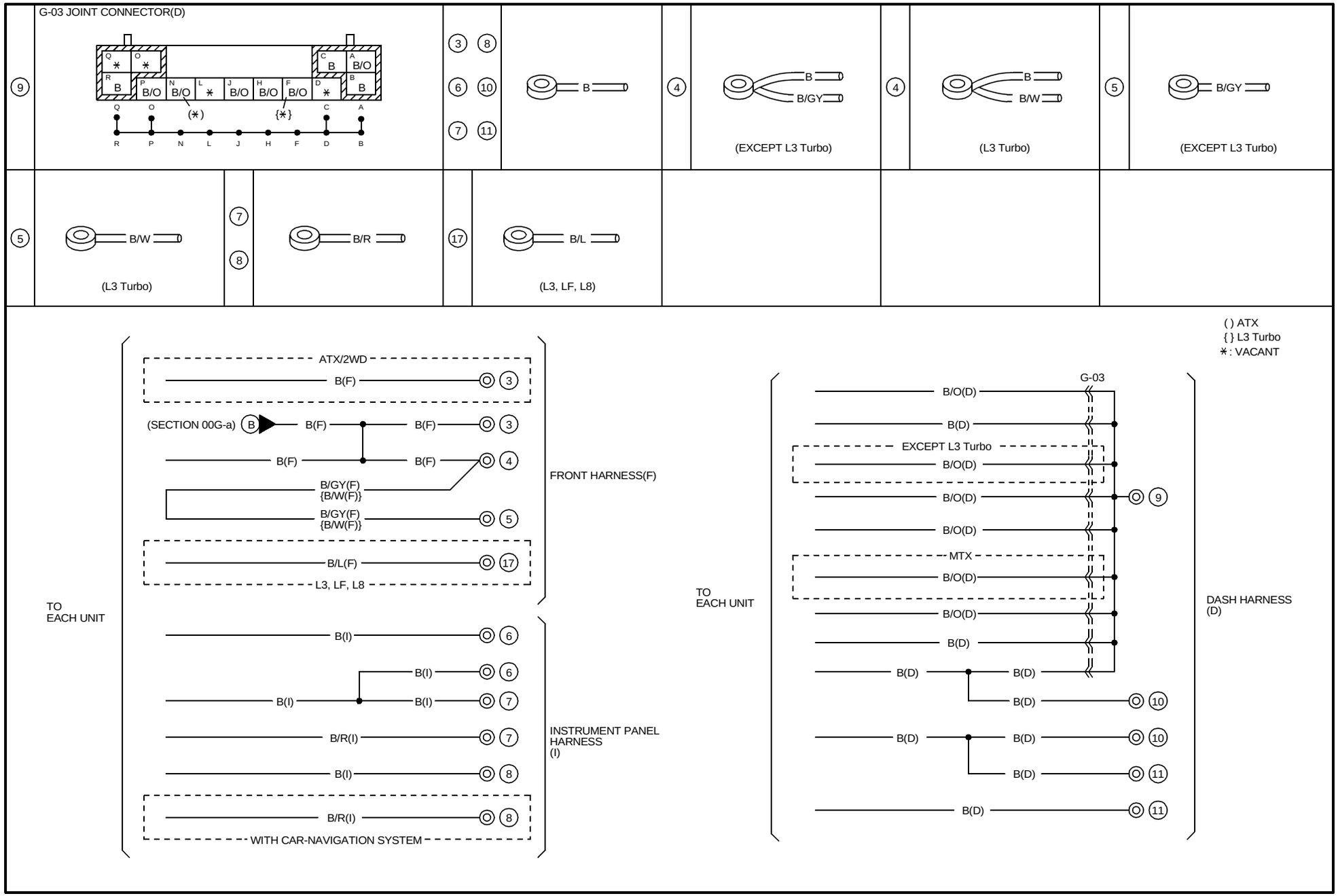

HARNESS SYMBOL : (F) (E) (D) (R)

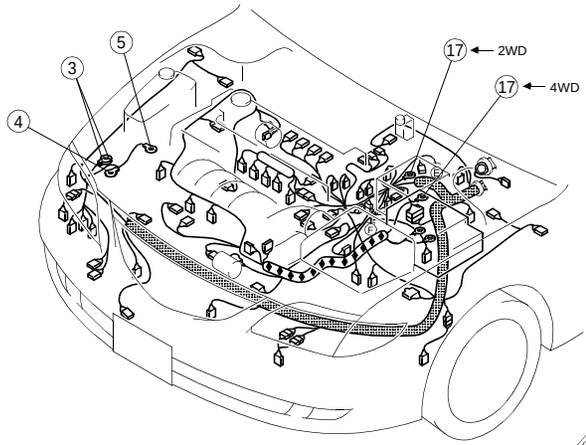

[EXCEPT MZR-CD (RF Turbo)]

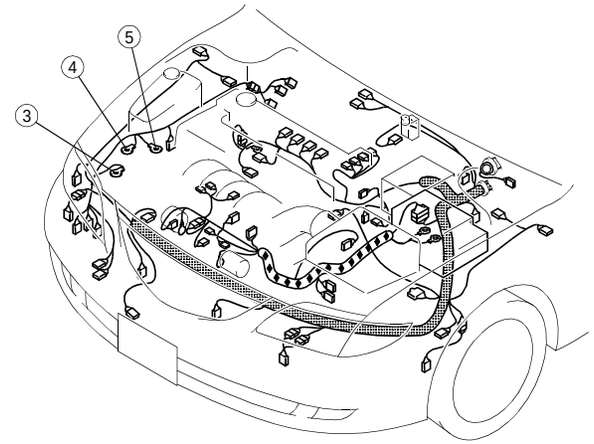

[MZR-CD (RF Turbo)]

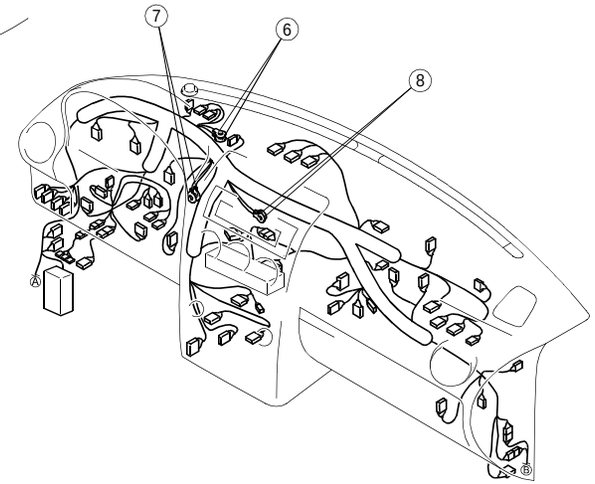

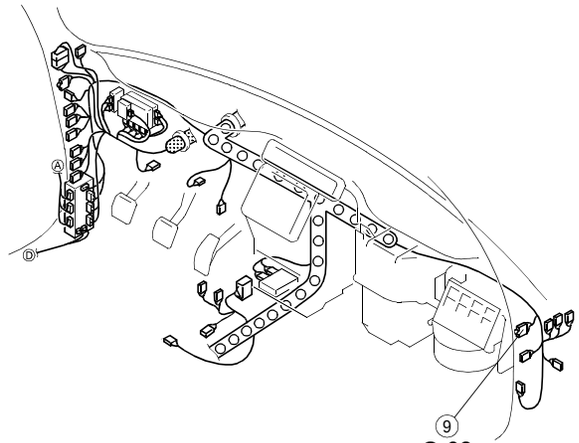

G-03

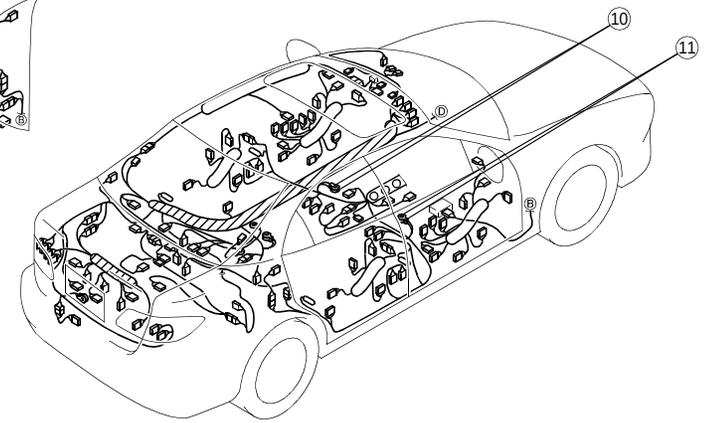

GROUND POINT

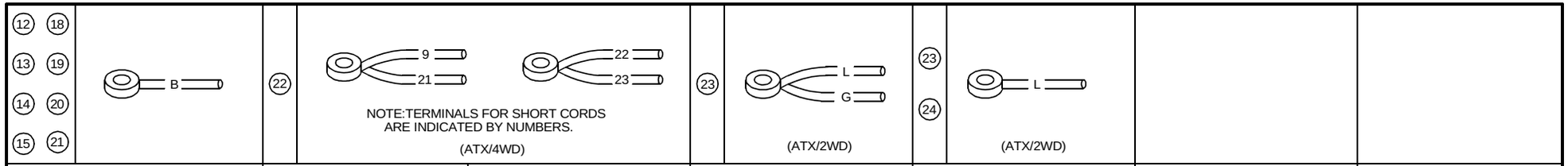

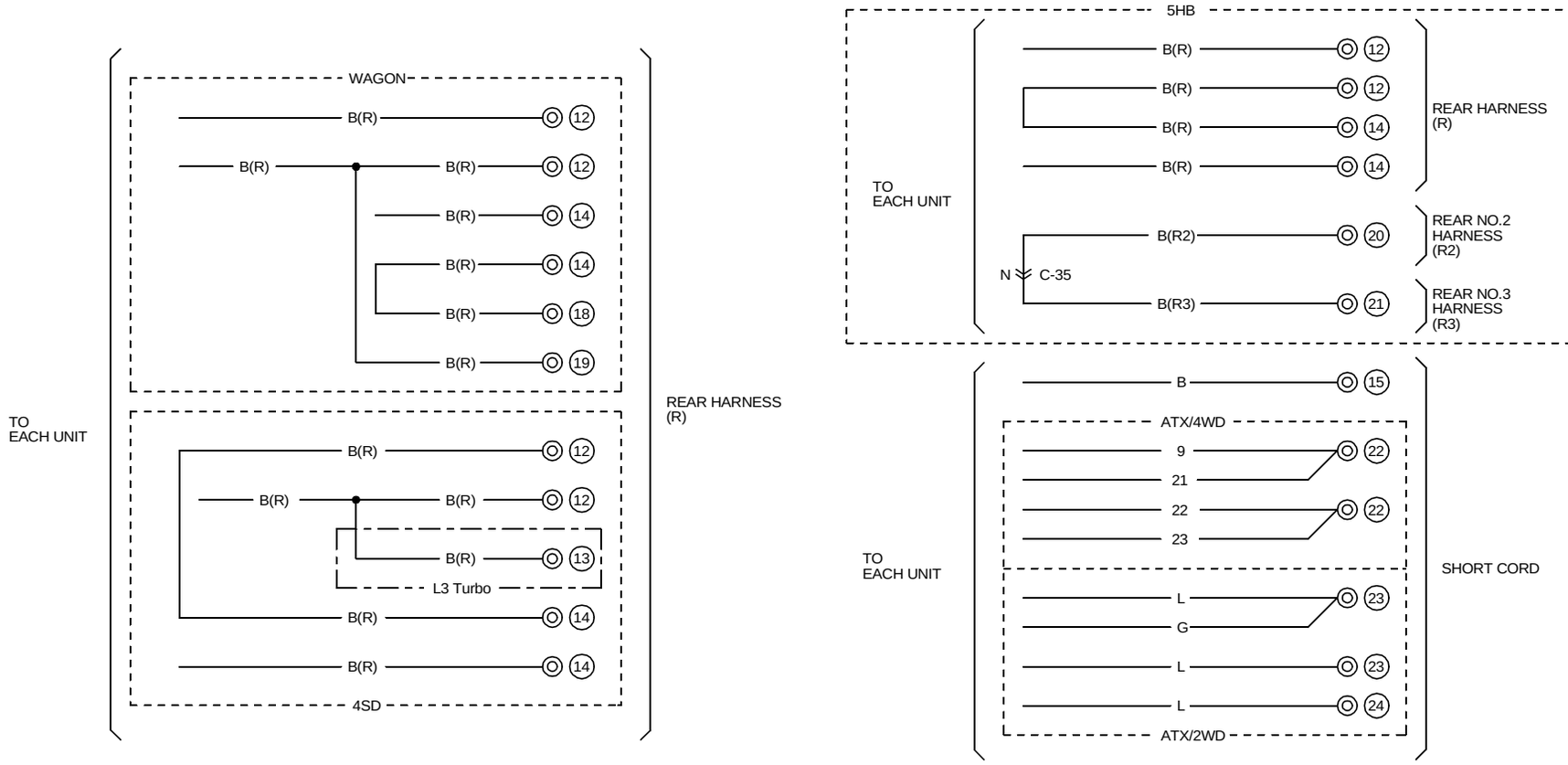

HARNESS SYMBOL : (F) (E) (D) (R)

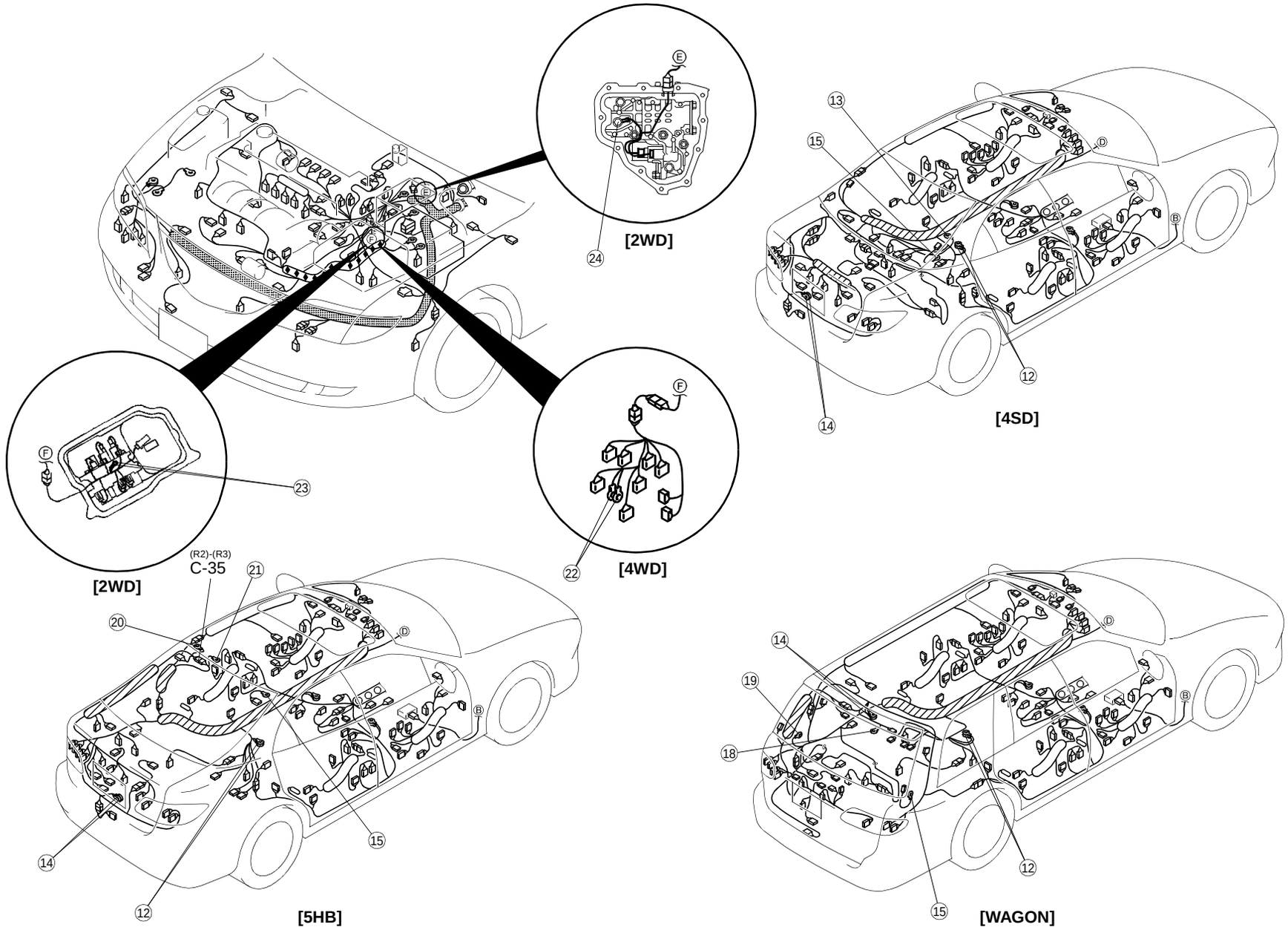

DATA LINK CONNECTOR

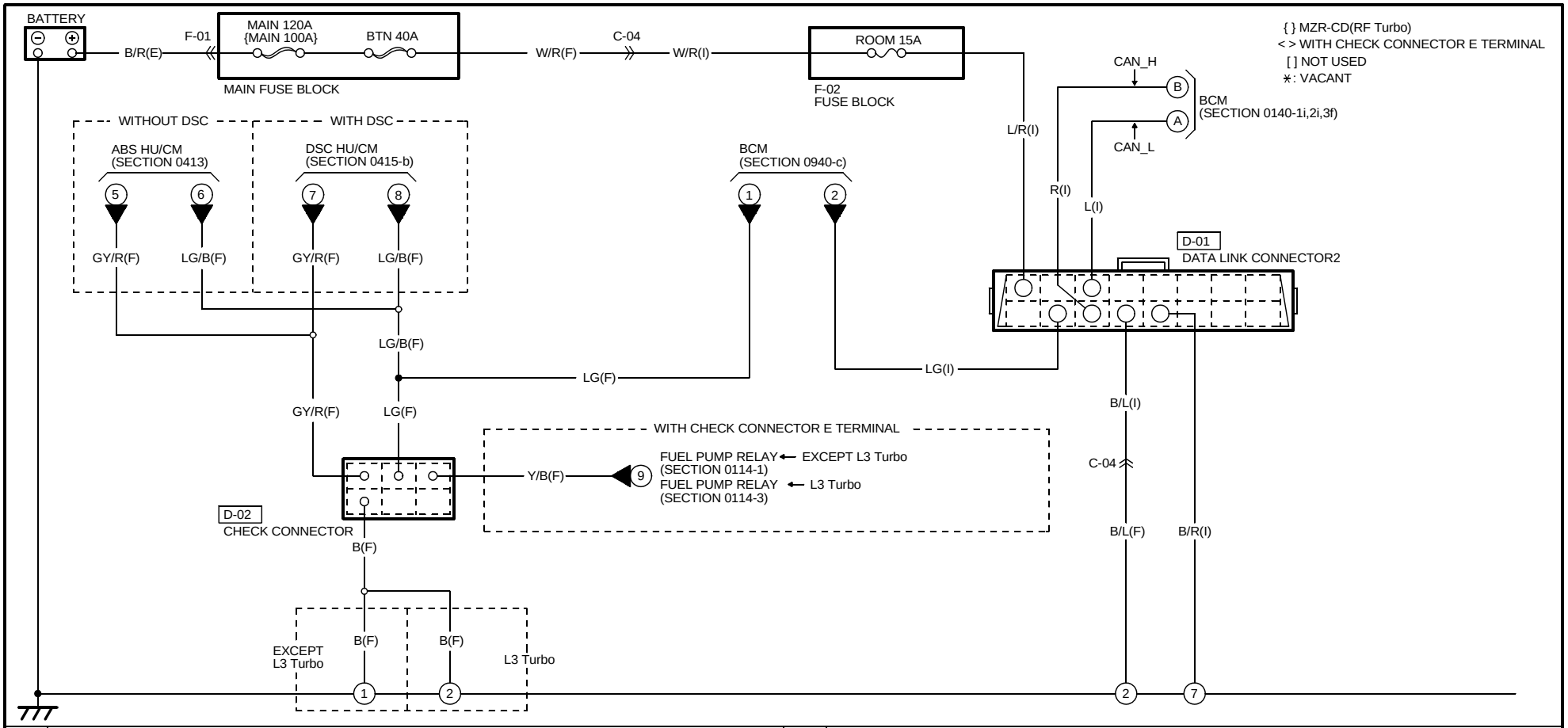

D-01
DATA LINK CONNECTOR2(I)

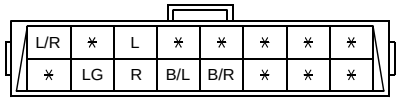

NOTE:SEEN FROM TERMINAL SIDE

D-02
CHECK CONNECTOR(F)

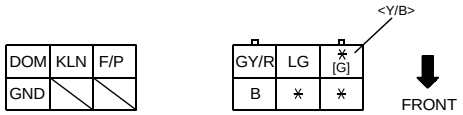

NOTE:SEEN FROM TERMINAL SIDE

https://www.MyCarManual.com

HARNESS SYMBOL : (F) (E) (D) (R)

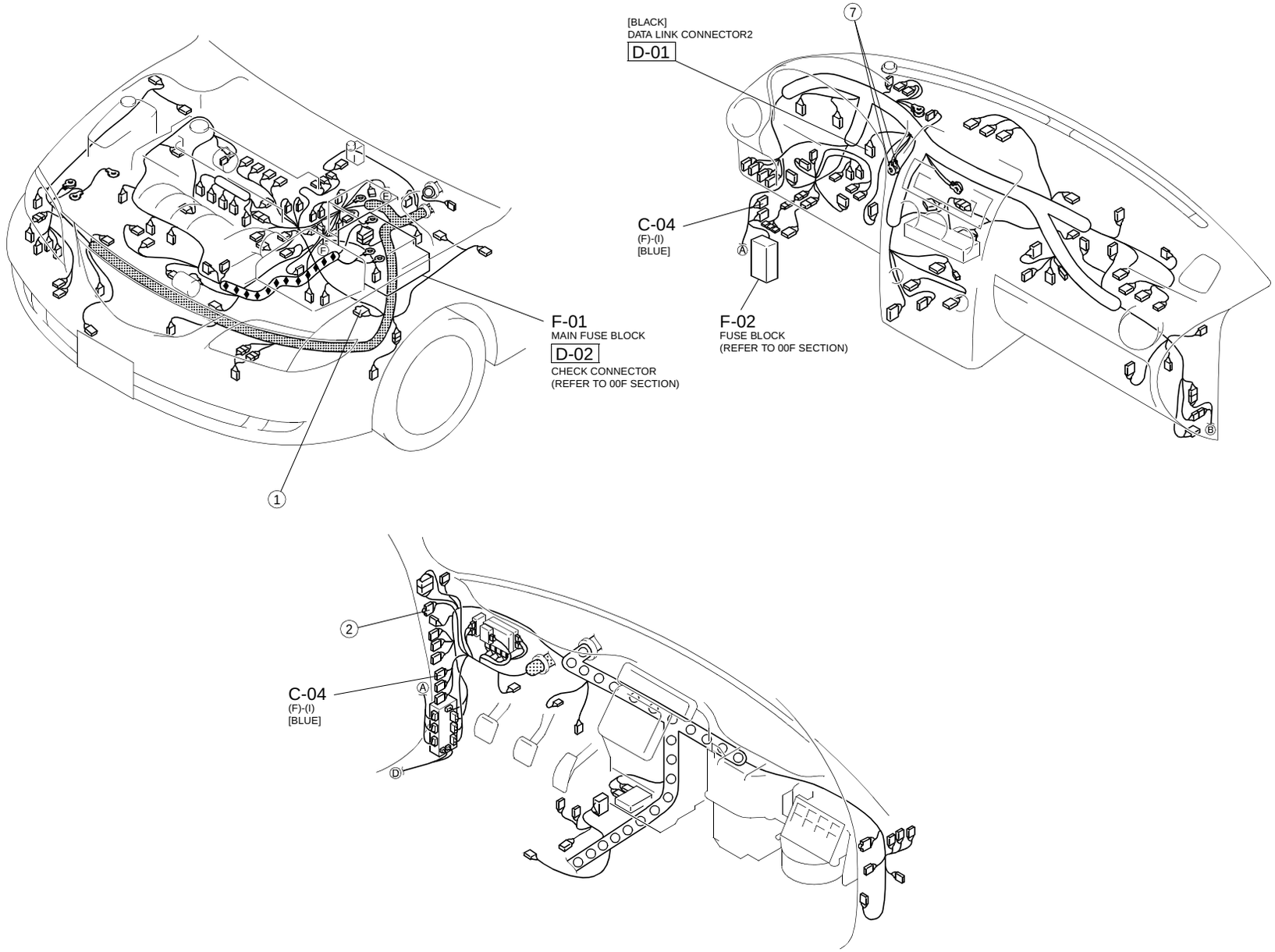

COOLING SYSTEM (L3)

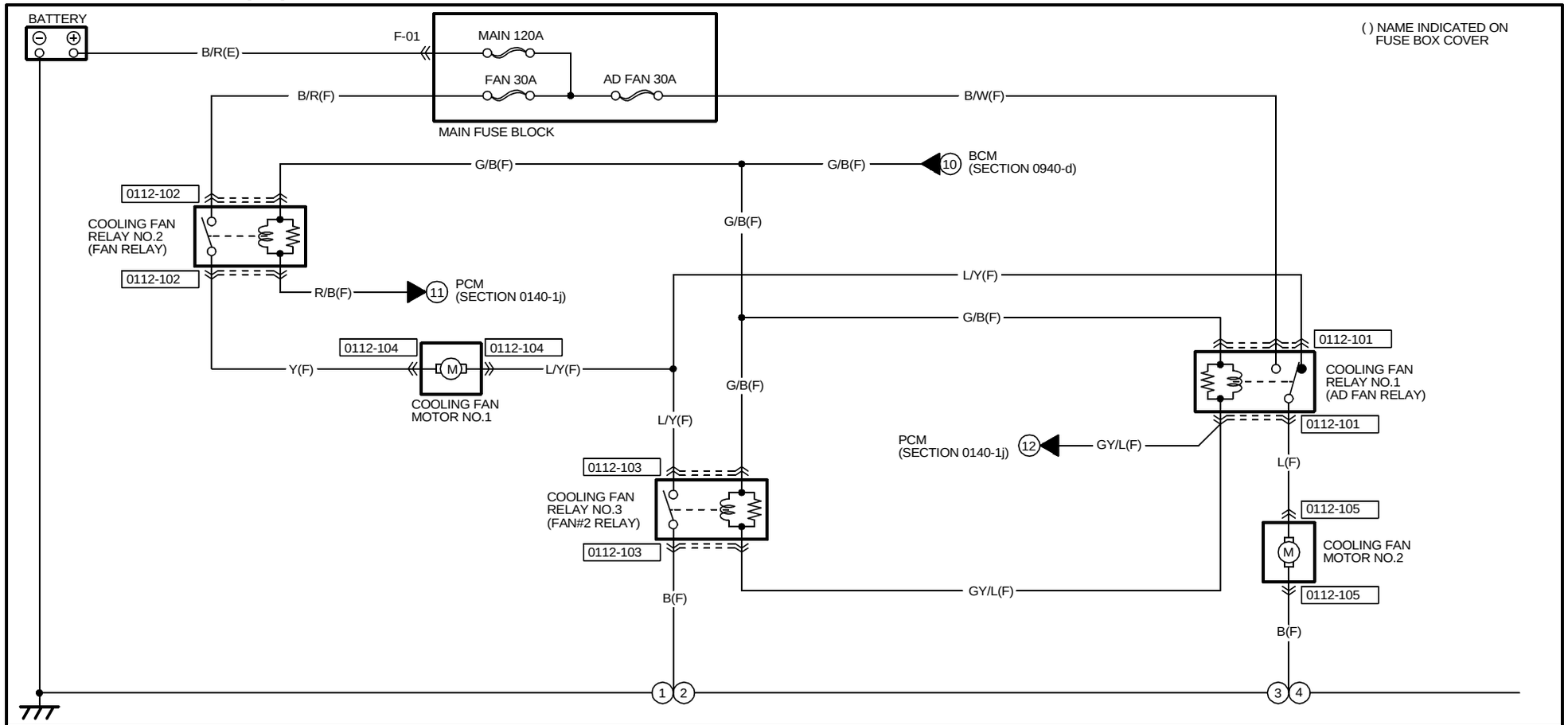

0112-101 COOLING FAN RELAY NO.1(F)	0112-102 COOLING FAN RELAY NO.2(F)	0112-103 COOLING FAN RELAY NO.3(F)	0112-104 COOLING FAN MOTOR NO.1(F)
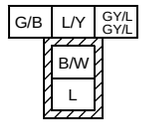 NOTE:SEEN FROM TERMINAL SIDE	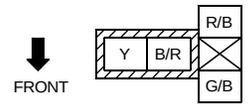 NOTE:SEEN FROM TERMINAL SIDE	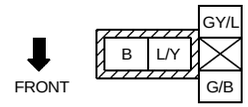 NOTE:SEEN FROM TERMINAL SIDE	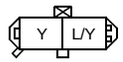
0112-105 COOLING FAN MOTOR NO.2(F) 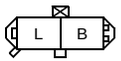			

HARNESS SYMBOL : (F) (E) (D) (R)

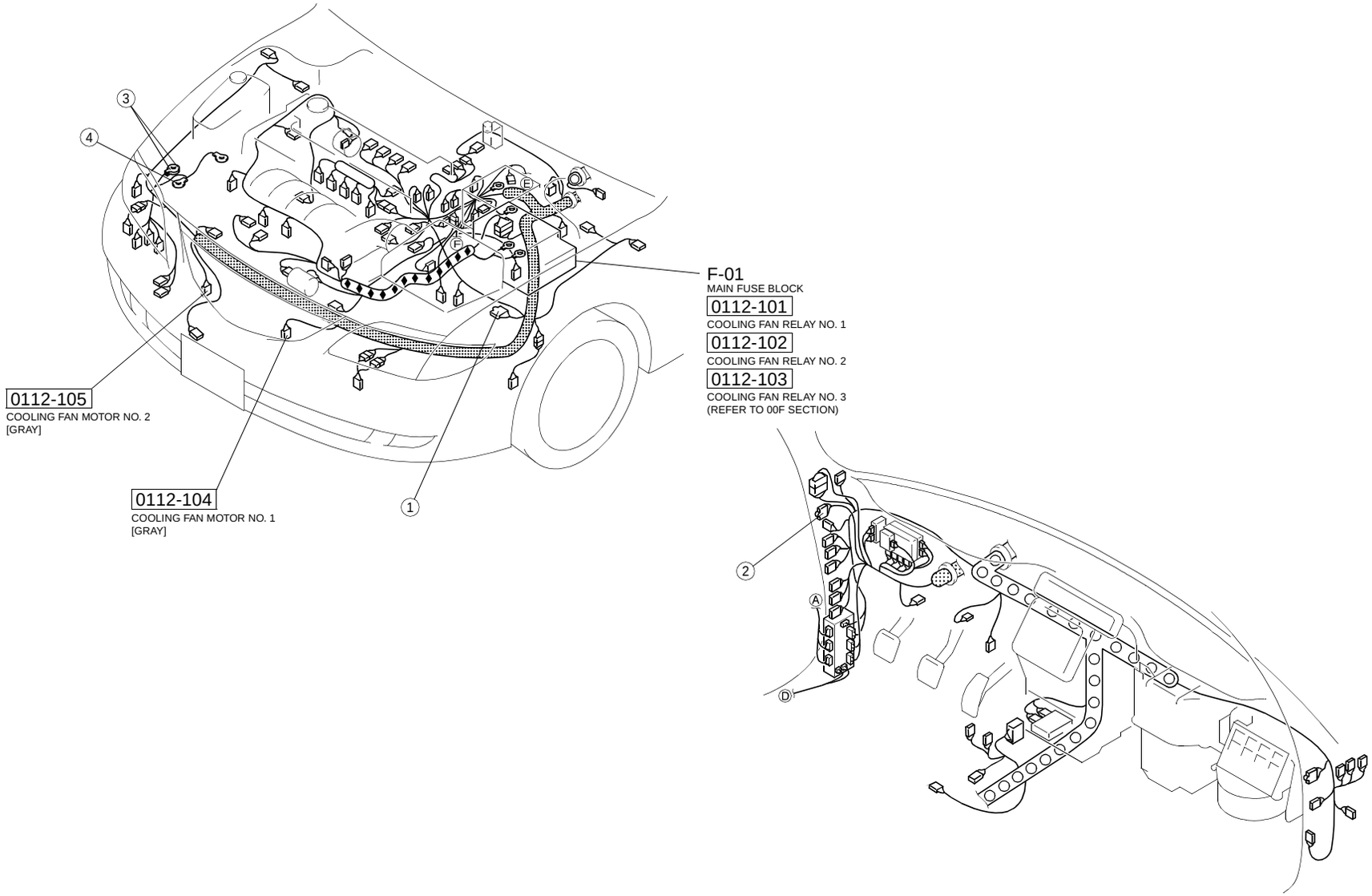

COOLING SYSTEM (EXCEPT FOR INTENSELY HOT AREA OR L8 OR MZR-CD (RF Turbo))

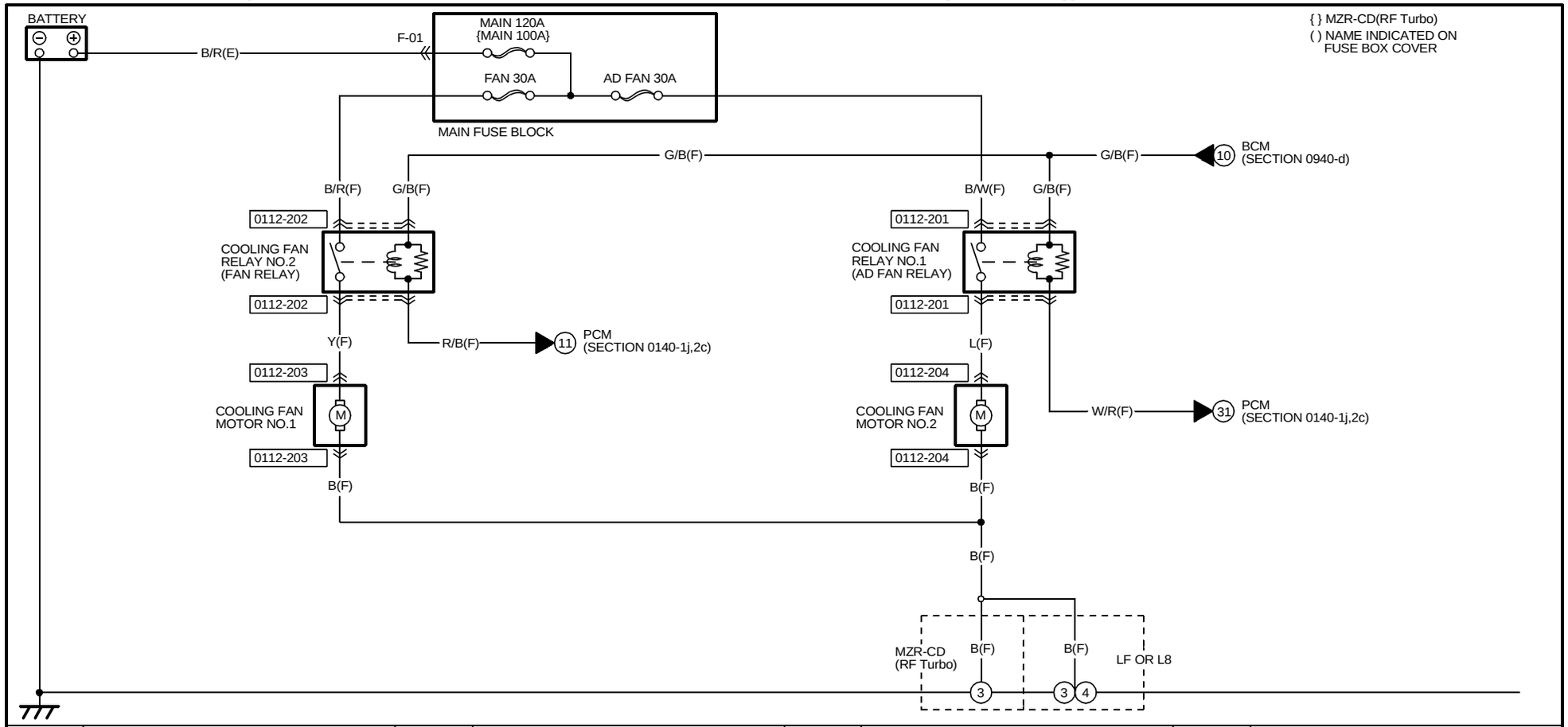

0112-201	0112-202	0112-203	0112-204
COOLING FAN RELAY NO.1(F)	COOLING FAN RELAY NO.2(F)	COOLING FAN MOTOR NO.1(F)	COOLING FAN MOTOR NO.2(F)
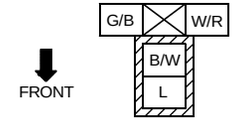	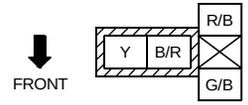	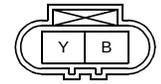 (LF OR L8) 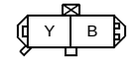 (MZR-CD(RF Turbo))	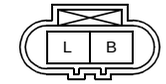 (LF OR L8) 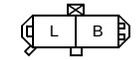 (MZR-CD(RF Turbo))
NOTE:SEEN FROM TERMINAL SIDE	NOTE:SEEN FROM TERMINAL SIDE		

HARNESS SYMBOL : (F) (E) (D) (R)

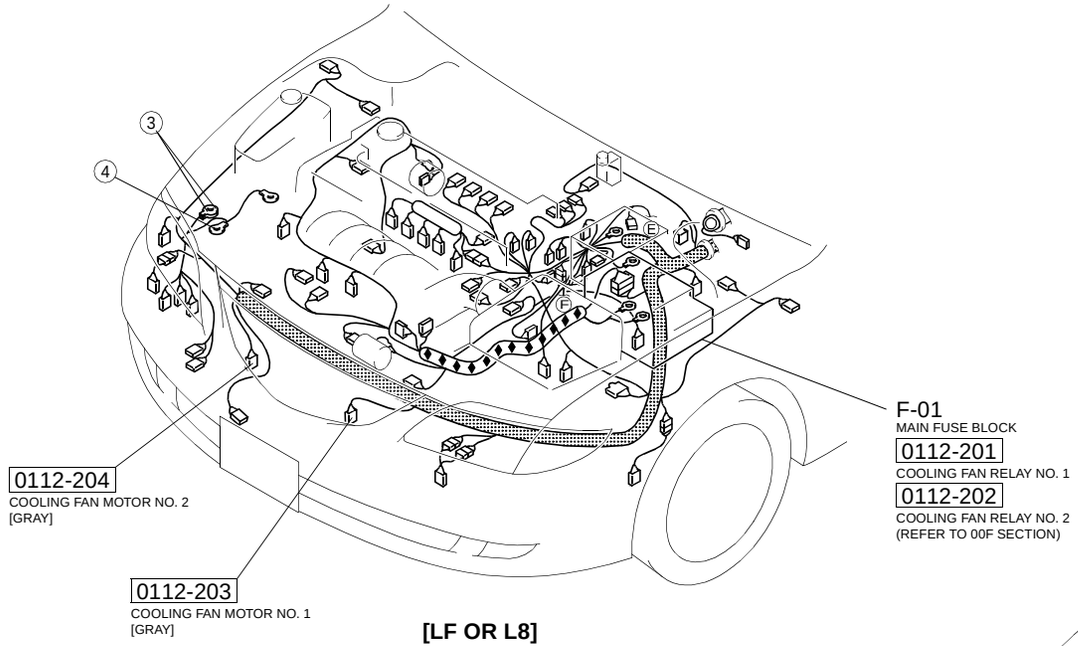

[LF OR L8]

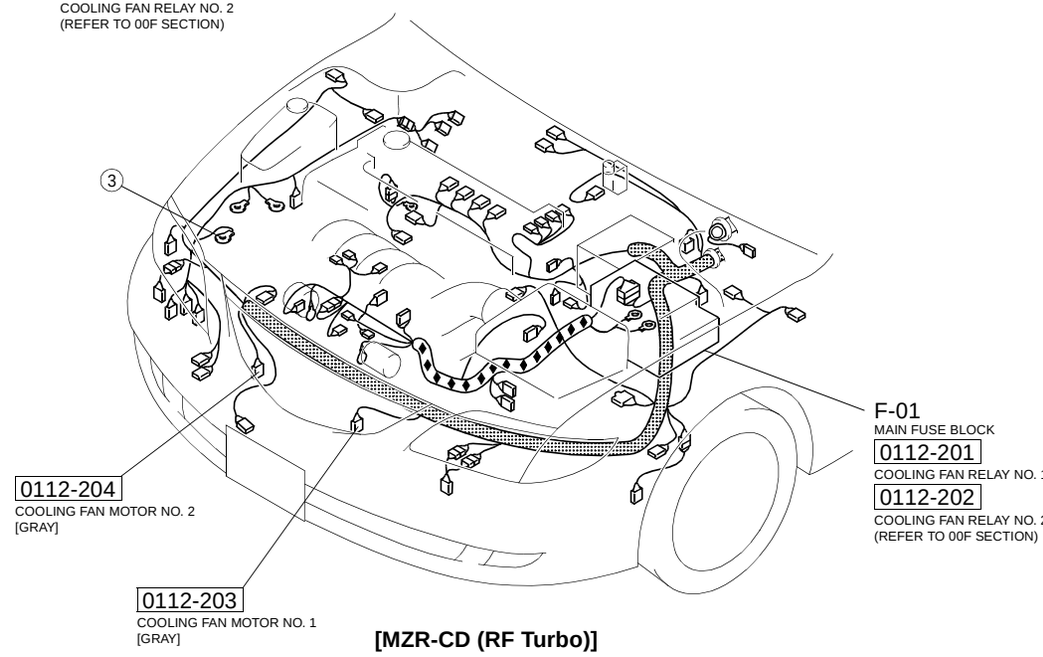

[MZR-CD (RF Turbo)]

COOLING SYSTEM (FOR INTENSELY HOT AREA)

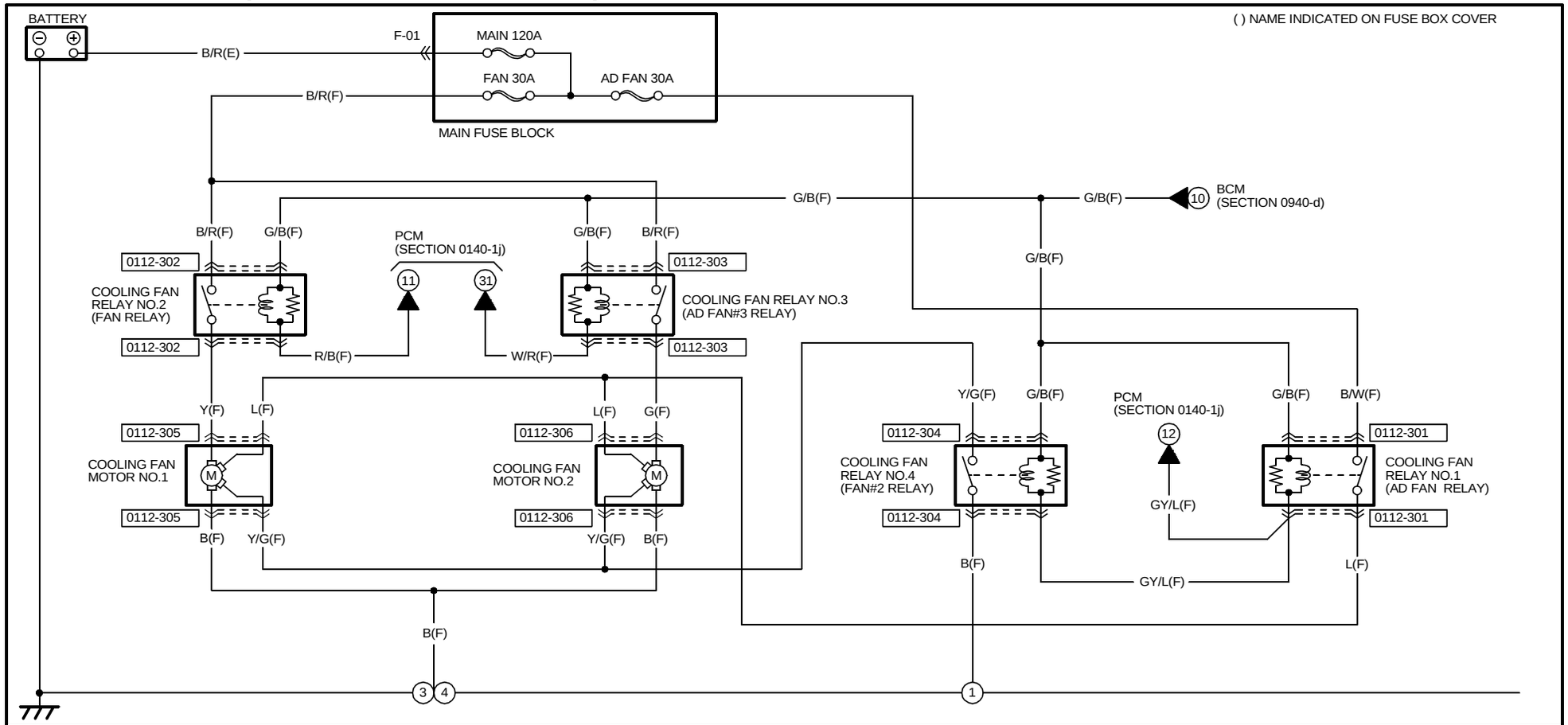

0112-301
COOLING FAN RELAY NO.1(F)

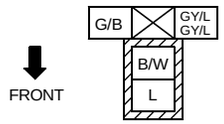

NOTE:SEEN FROM TERMINAL SIDE.

0112-302
COOLING FAN RELAY NO.2(F)

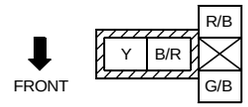

NOTE:SEEN FROM TERMINAL SIDE.

0112-303
COOLING FAN RELAY NO.3(F)

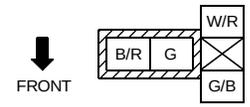

NOTE:SEEN FROM TERMINAL SIDE.

0112-304
COOLING FAN RELAY NO.4(F)

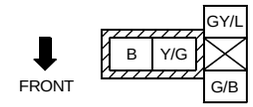

NOTE:SEEN FROM TERMINAL SIDE.

0112-305
COOLING FAN MOTOR NO.1(F)

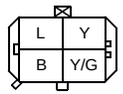

0112-306
COOLING FAN MOTOR NO.2(F)

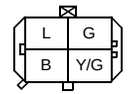

HARNESS SYMBOL : (F) (E) (D) (R)

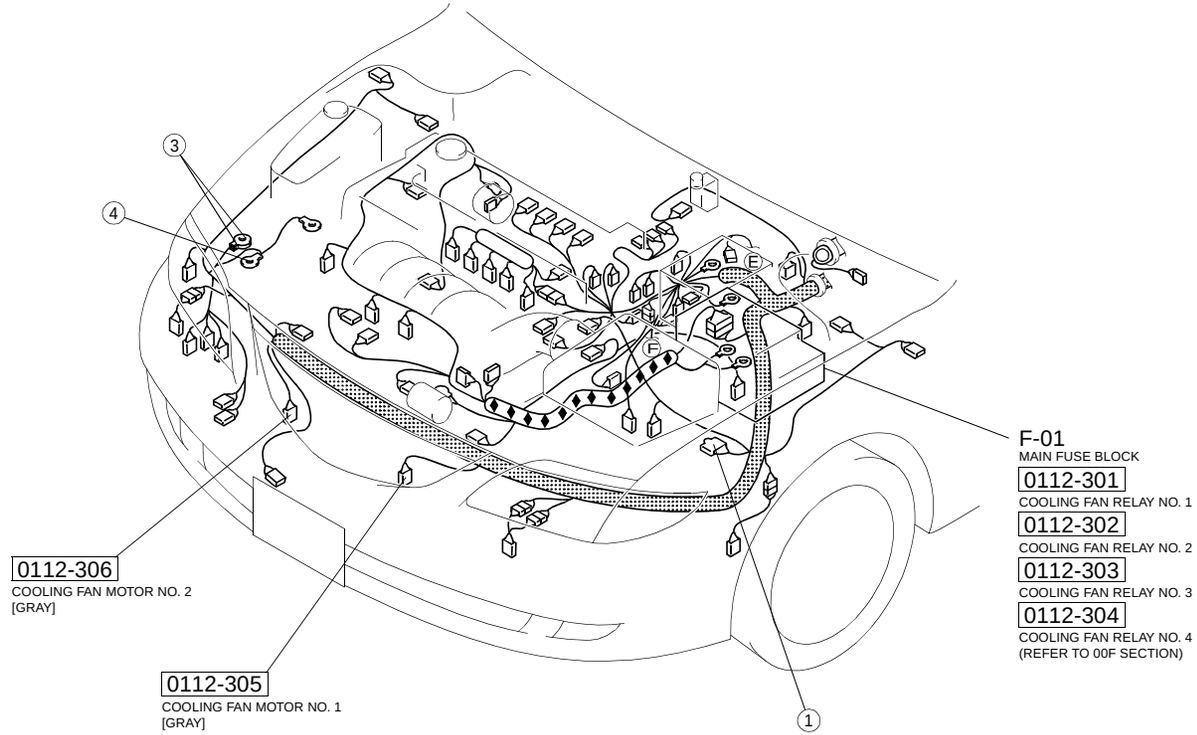

COOLING SYSTEM (L3 Turbo)

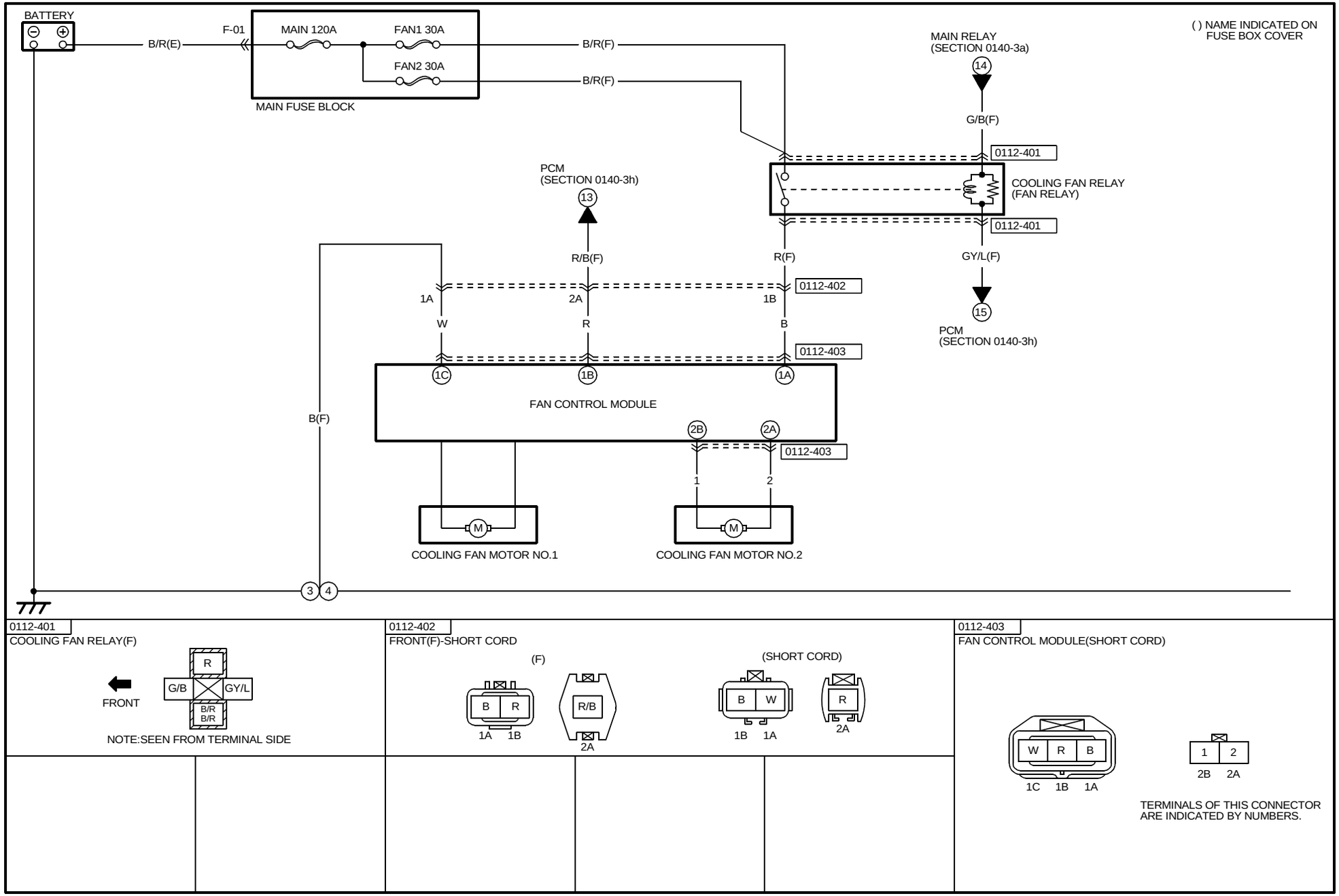

HARNESS SYMBOL : (F) (E) (D) (R)

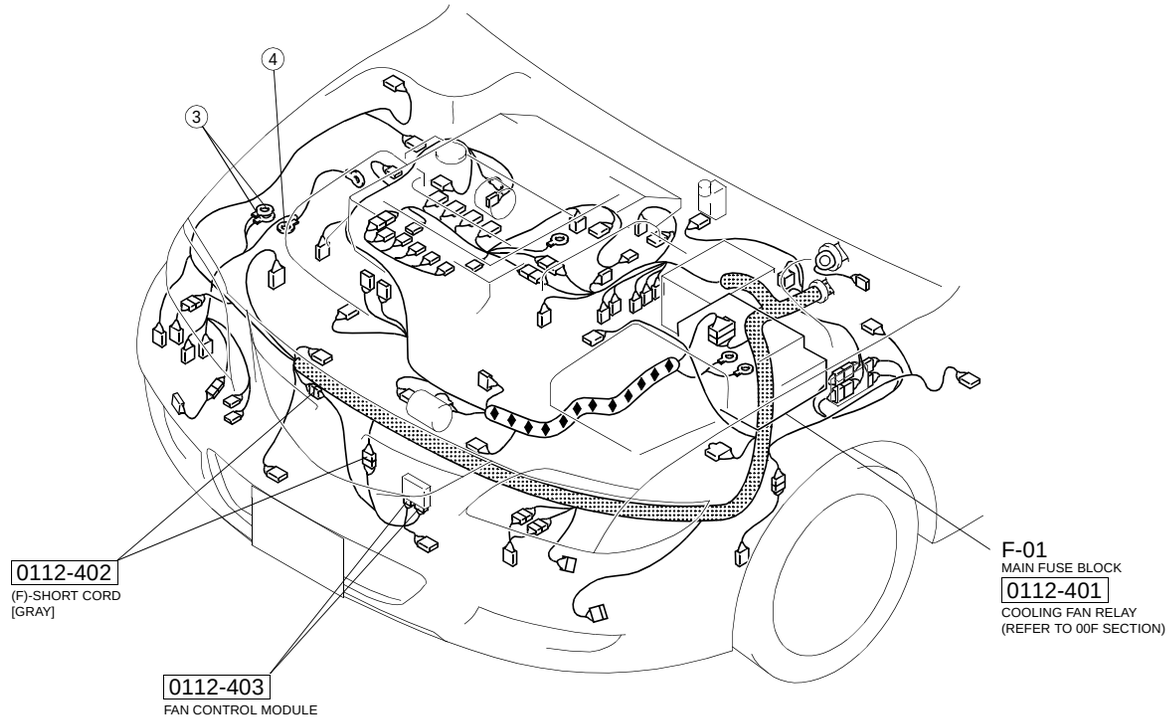

FUEL SYSTEM (L3, LF, L8)

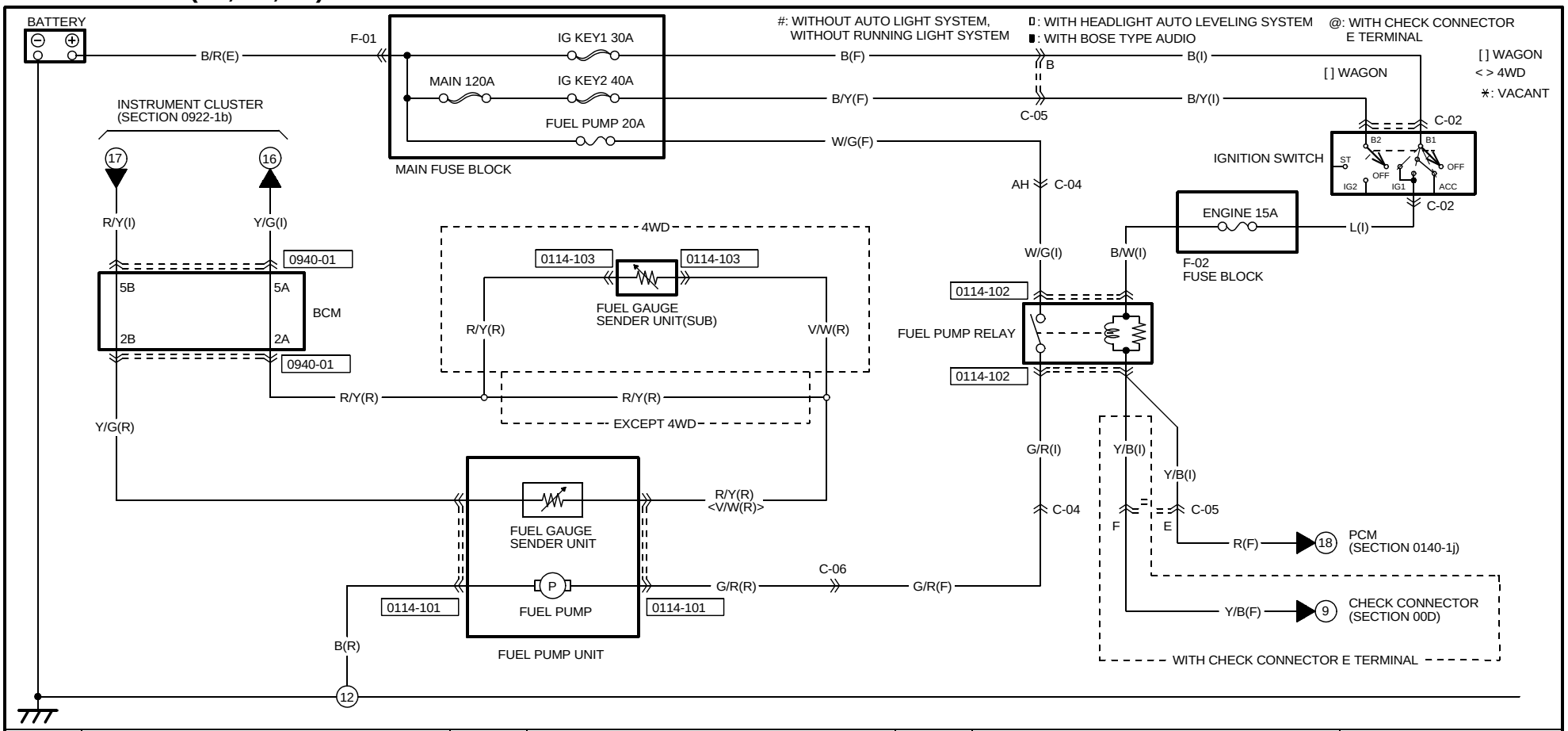

0114-101
FUEL PUMP UNIT(R)

0114-102
FUEL PUMP RELAY(I)

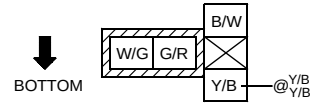

NOTE:SEEN FROM TERMINAL SIDE

0114-103
FUEL GAUGE SENDER UNIT(SUB)(R)

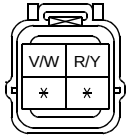

(4WD)

0940-01
BCM

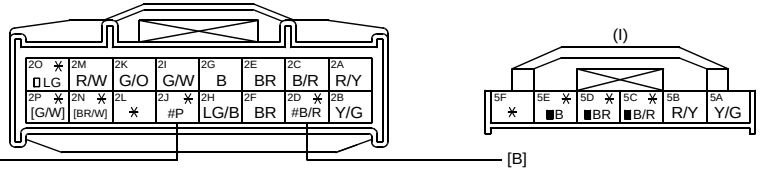

https://www.MyCarManual.com

HARNESS SYMBOL : (F) (E) (D) (R)

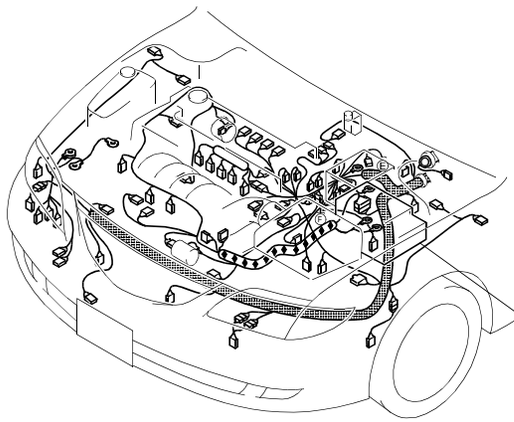

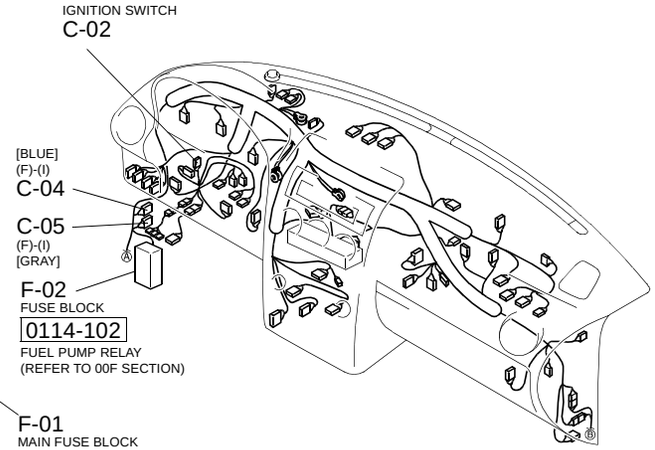

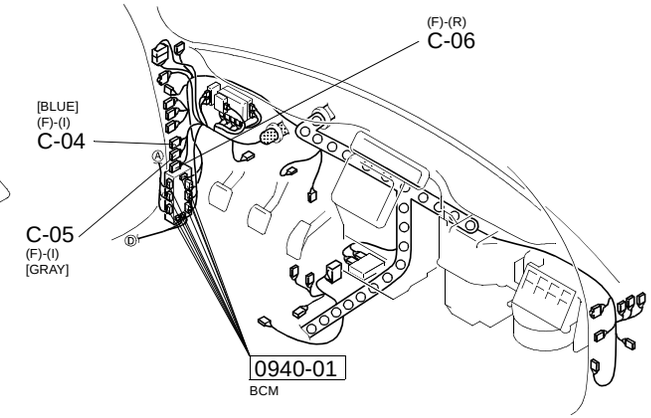

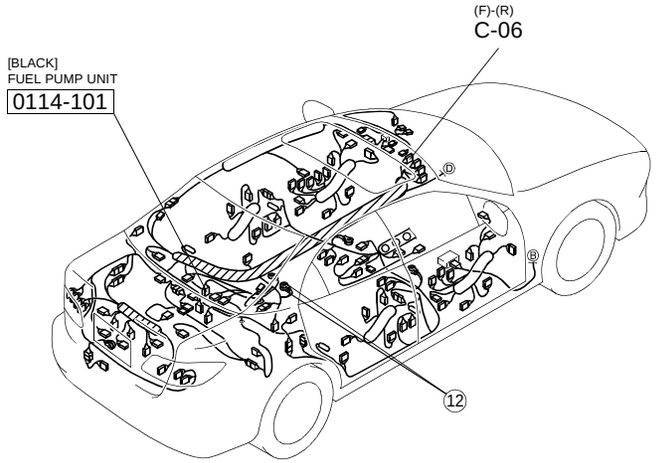

[4SD]

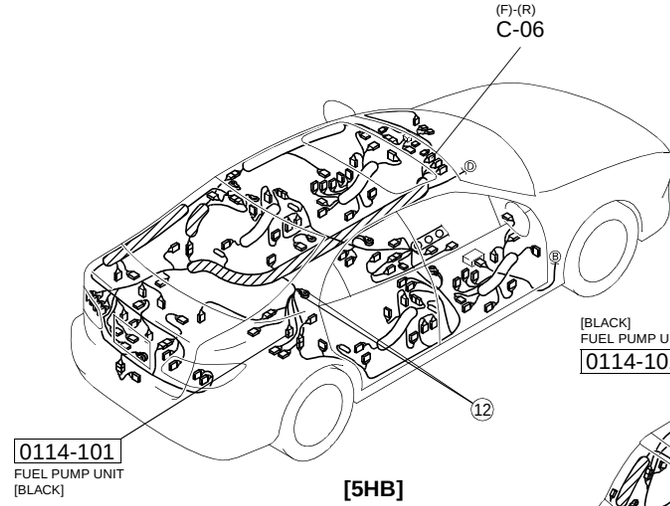

[5HB]

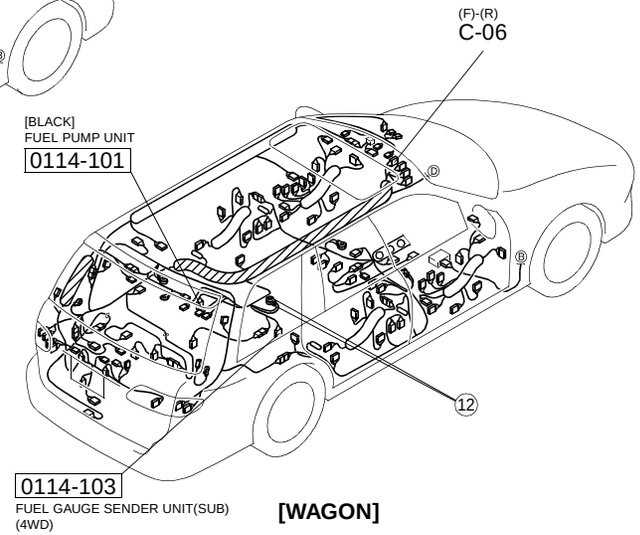

[WAGON]

FUEL WARMER (MZR-CD (RF Turbo))

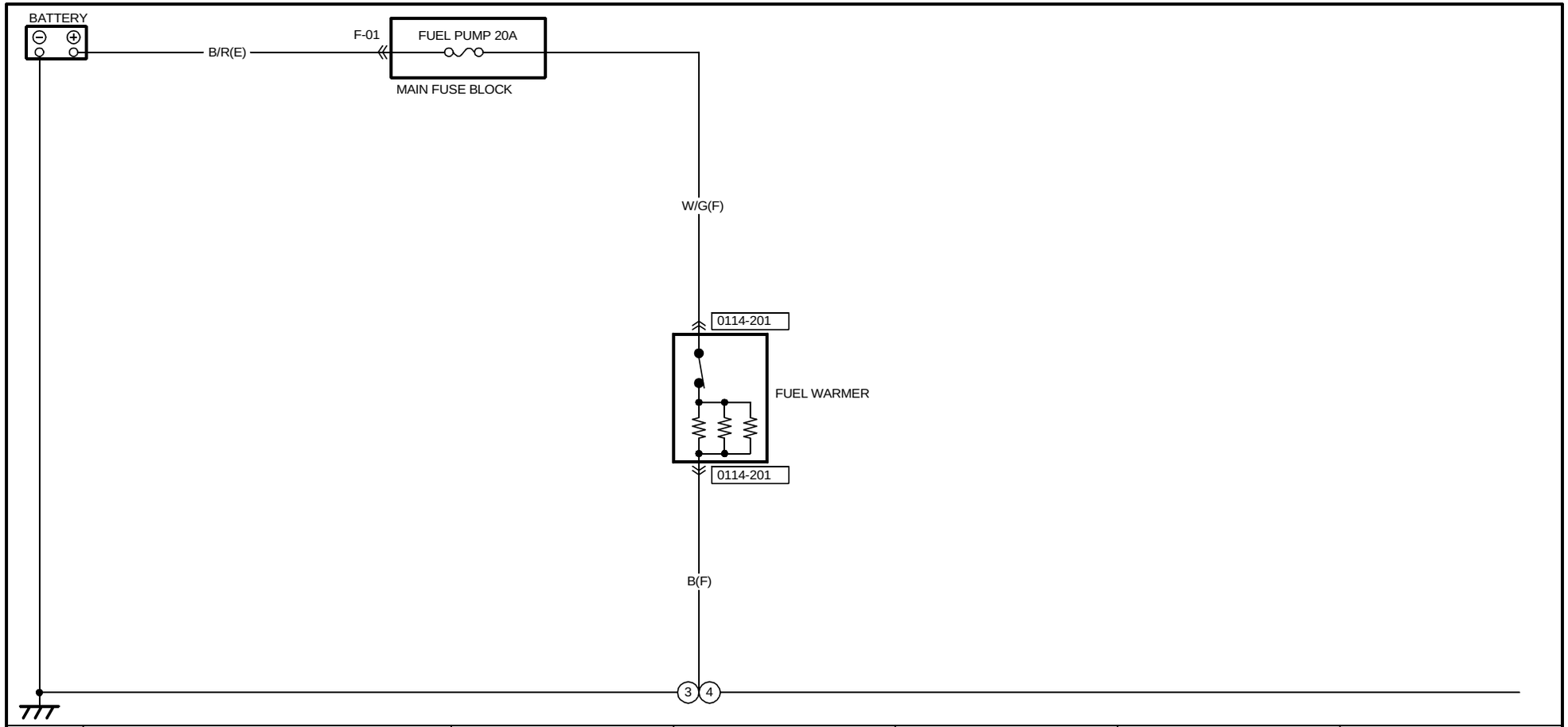

0114-201
FUEL WARMER(F)

HARNESS SYMBOL : (F) (E) (D) (R)

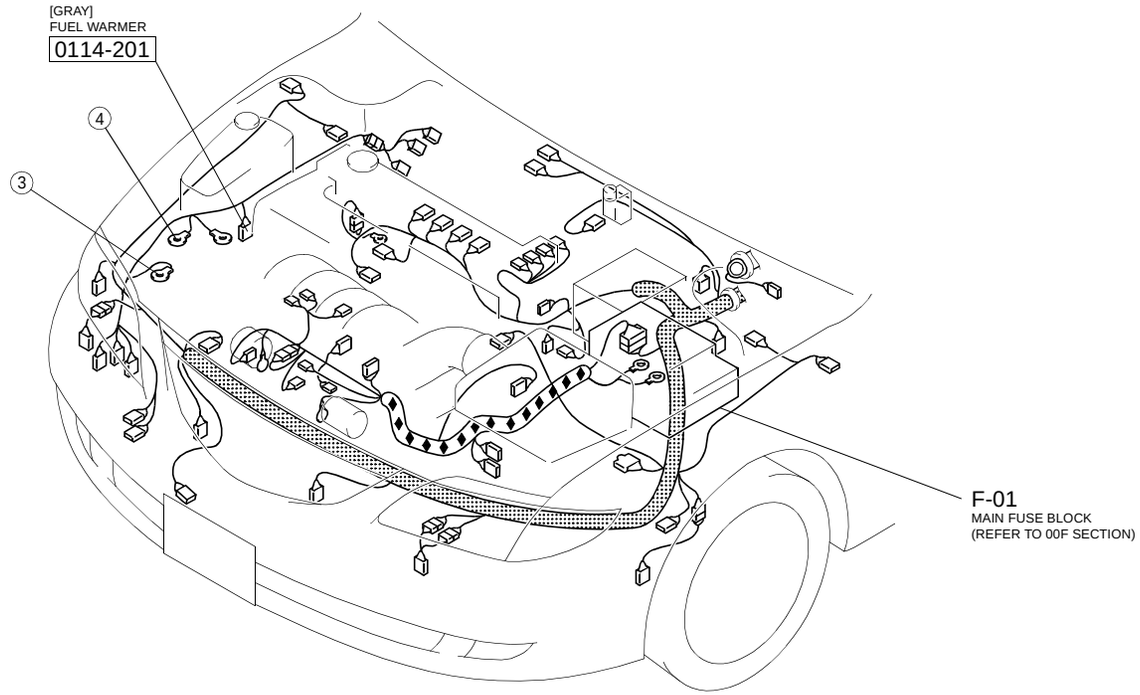

FUEL SYSTEM (L3 Turbo)

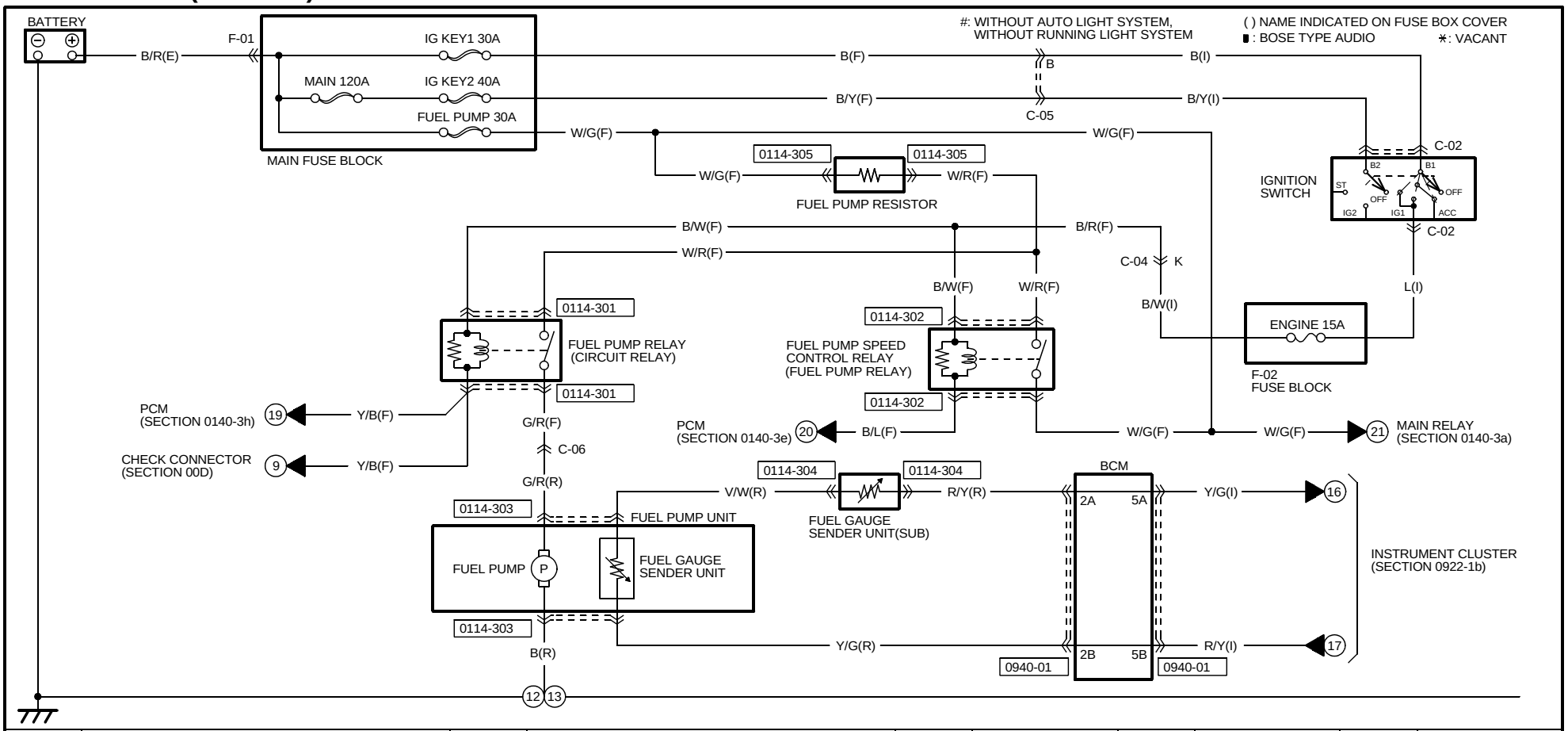

0114-301	0114-302	0114-303	0114-304	0114-305
FUEL PUMP RELAY(F)	FUEL PUMP SPEED CONTROL RELAY(F)	FUEL PUMP UNIT(R)	FUEL GAUGE SENDER UNIT (SUB)(R)	FUEL PUMP RESISTOR(F)

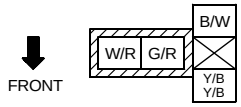

NOTE:SEEN FROM TERMINAL SIDE

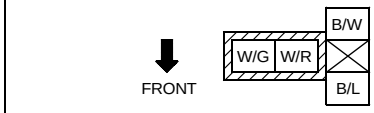

NOTE:SEEN FROM TERMINAL SIDE

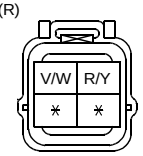

0940-01

BCM

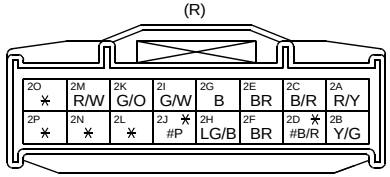

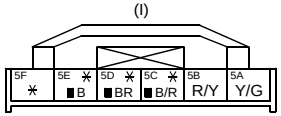

https://www.MyCarManual.com

HARNESS SYMBOL : (F) (E) (D) (R)

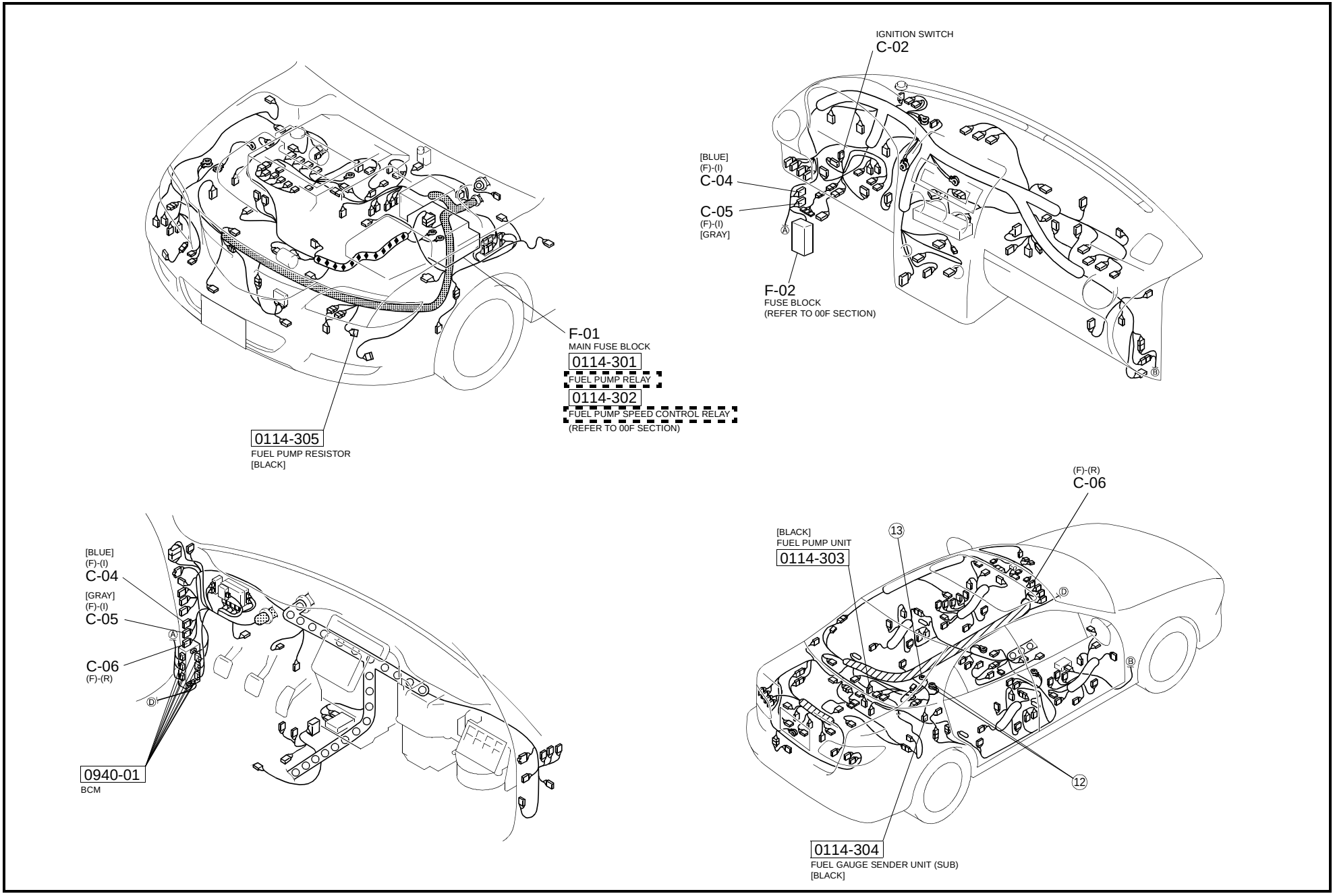

https://www.MyCarManual.com

CHARGING SYSTEM

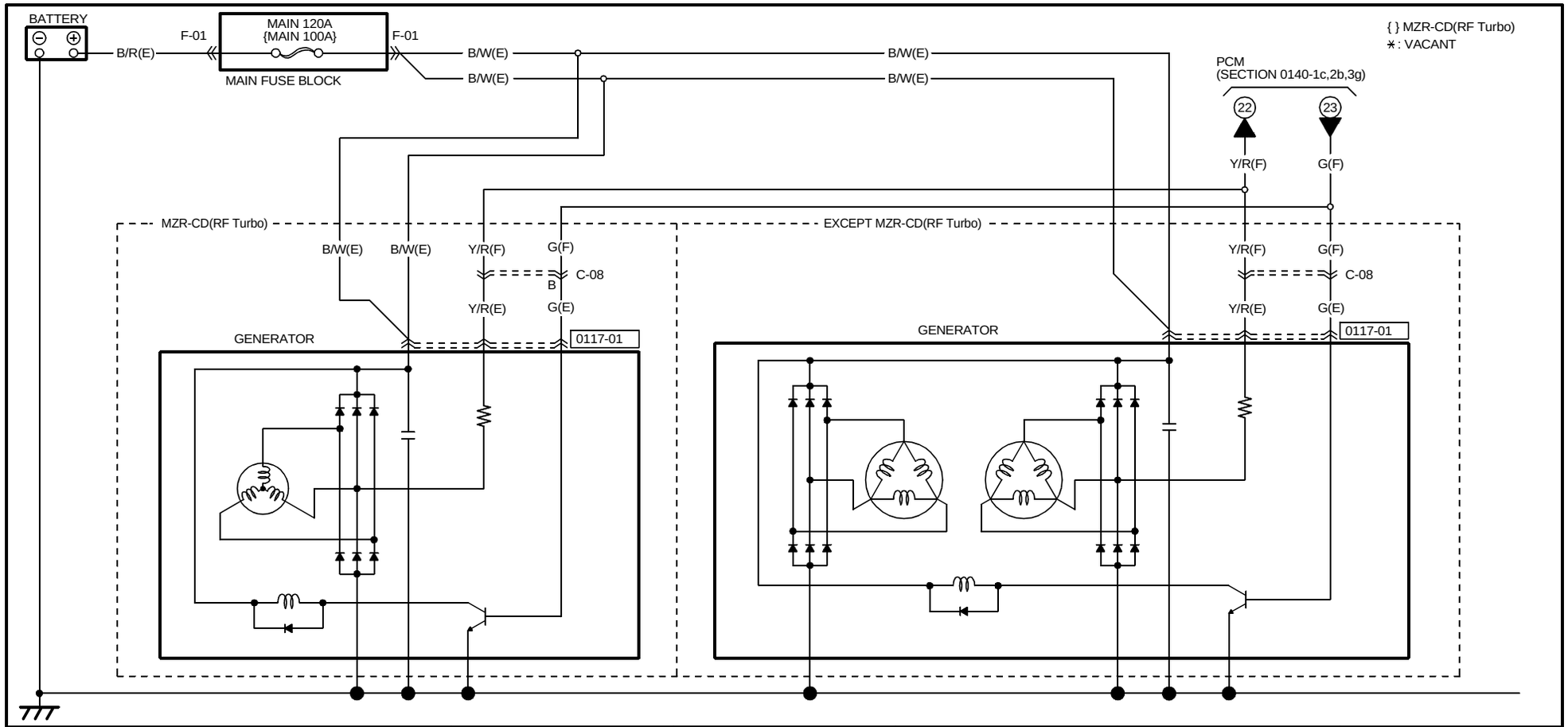

0117-01
GENERATOR(E)

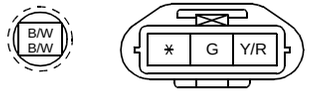

HARNESS SYMBOL : (F) (E) (D) (R)

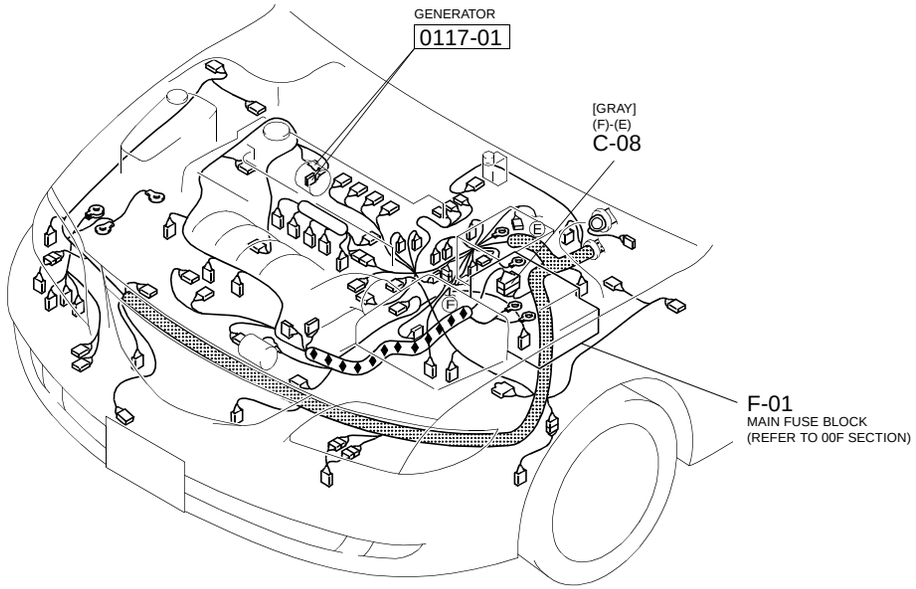

[EXCEPT MZR-CD (RF Turbo)]

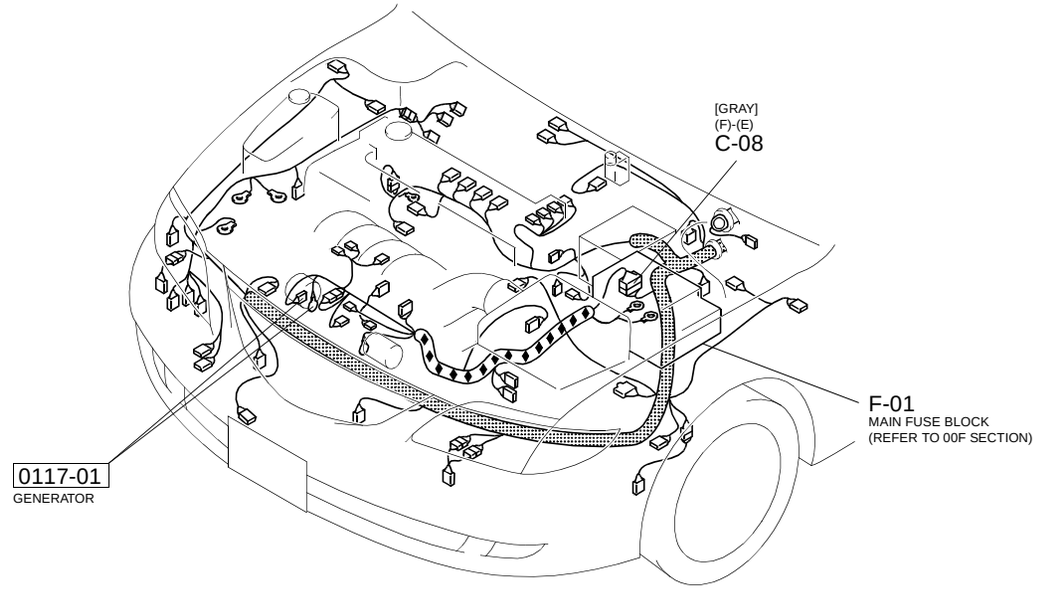

[MZR-CD (RF Turbo)]

STARTING SYSTEM (MTX)

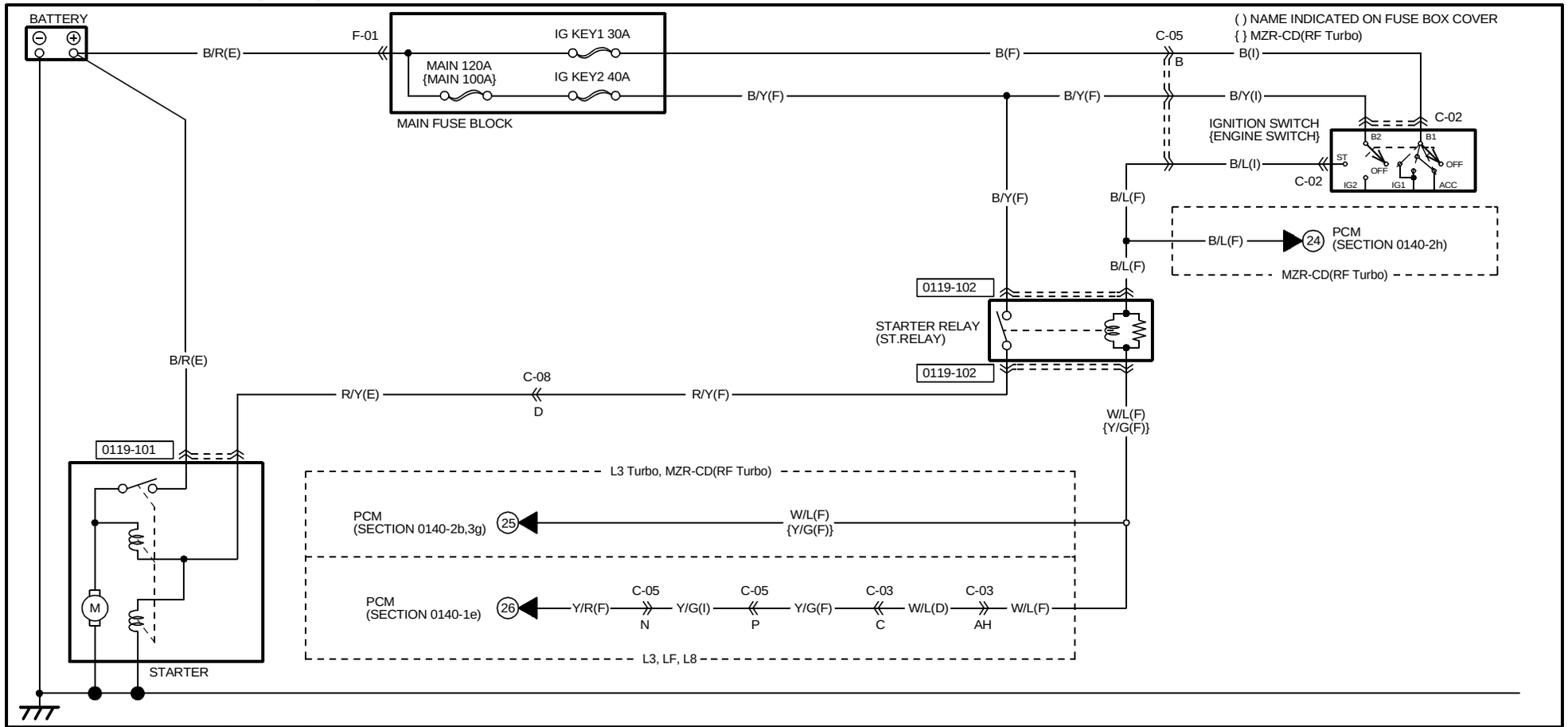

0119-101
STARTER(E)

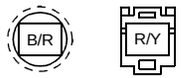

0119-102
STARTER RELAY(F)

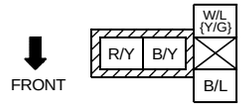

NOTE:SEEN FROM TERMINAL SIDE

HARNESS SYMBOL : (F) (E) (D) (R)

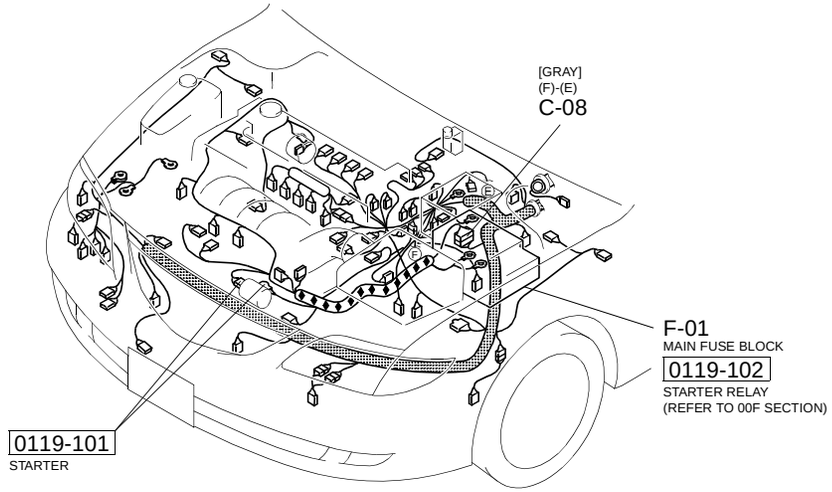

[EXCEPT MZR-CD (RF Turbo)]

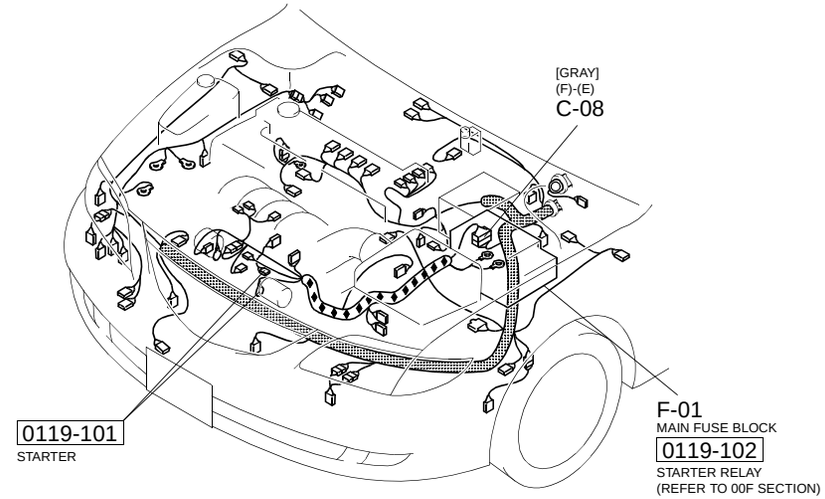

[MZR-CD (RF Turbo)]

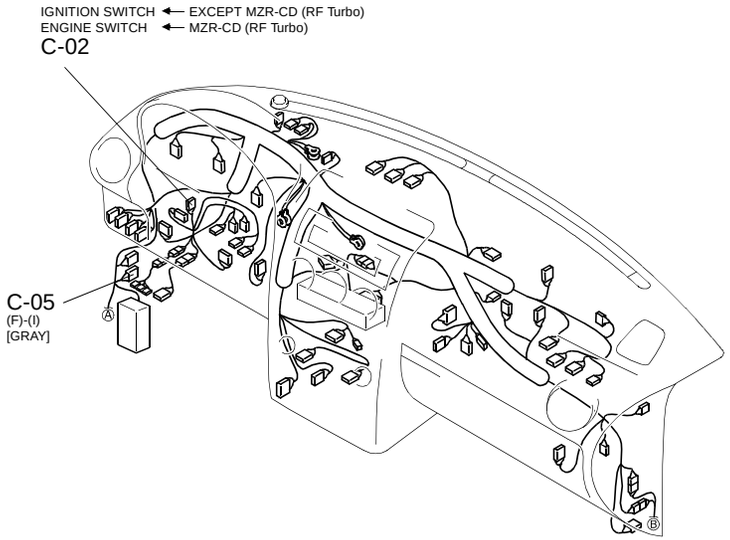

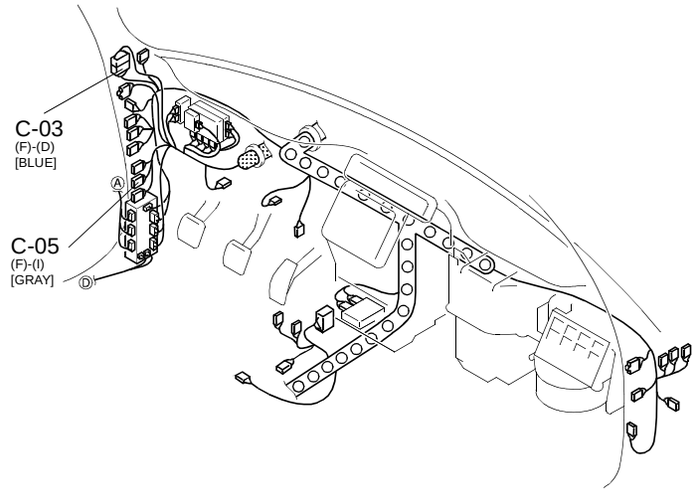

STARTING SYSTEM (ATX)

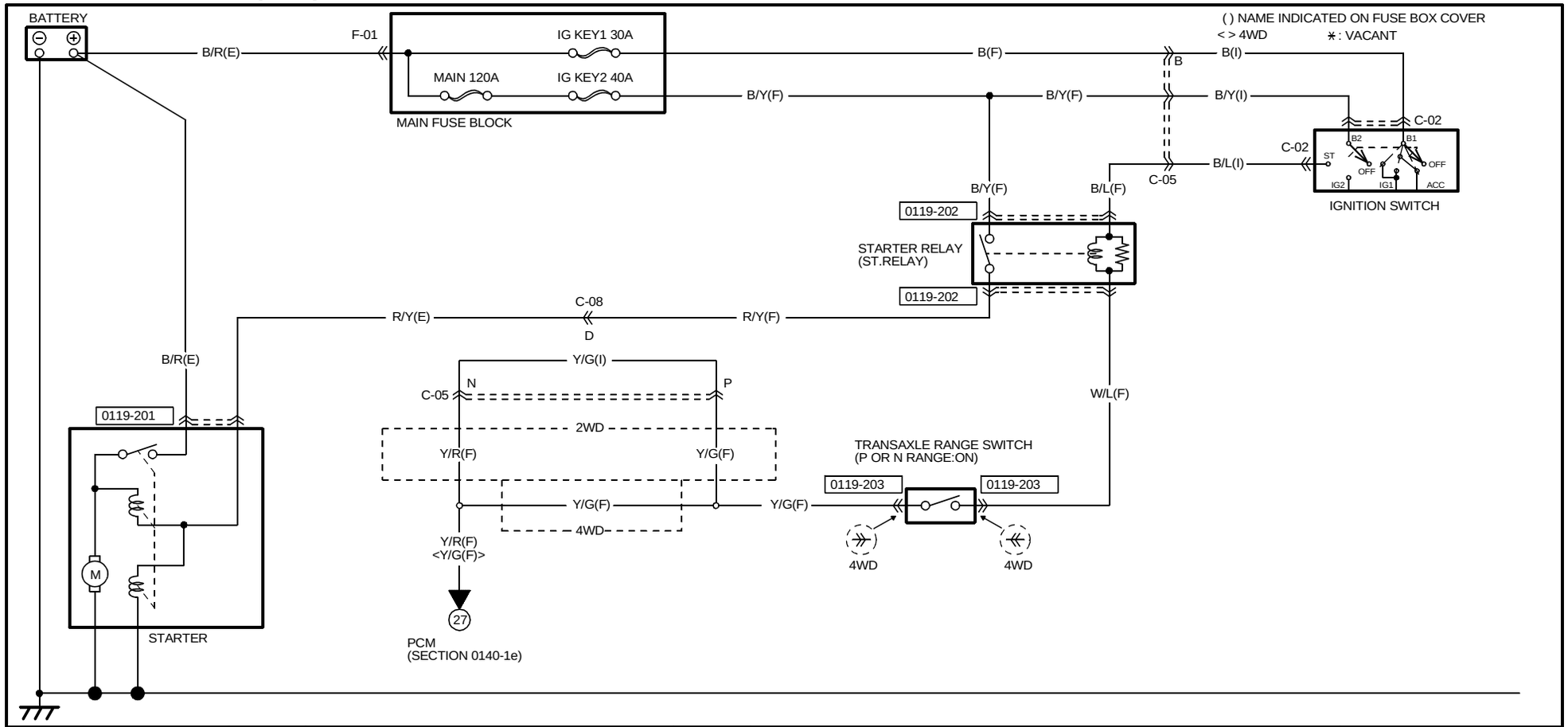

0119-201
STARTER(E)

0119-202
STARTER RELAY(F)

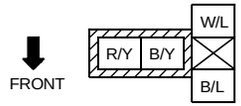

NOTE:SEEN FROM TERMINAL SIDE

0119-203
TRANSAXLE RANGE SWITCH(F)

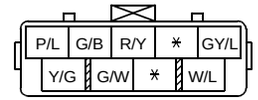

(4WD)

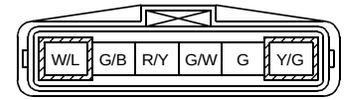

(2WD)

HARNESS SYMBOL : (F) (E) (D) (R)

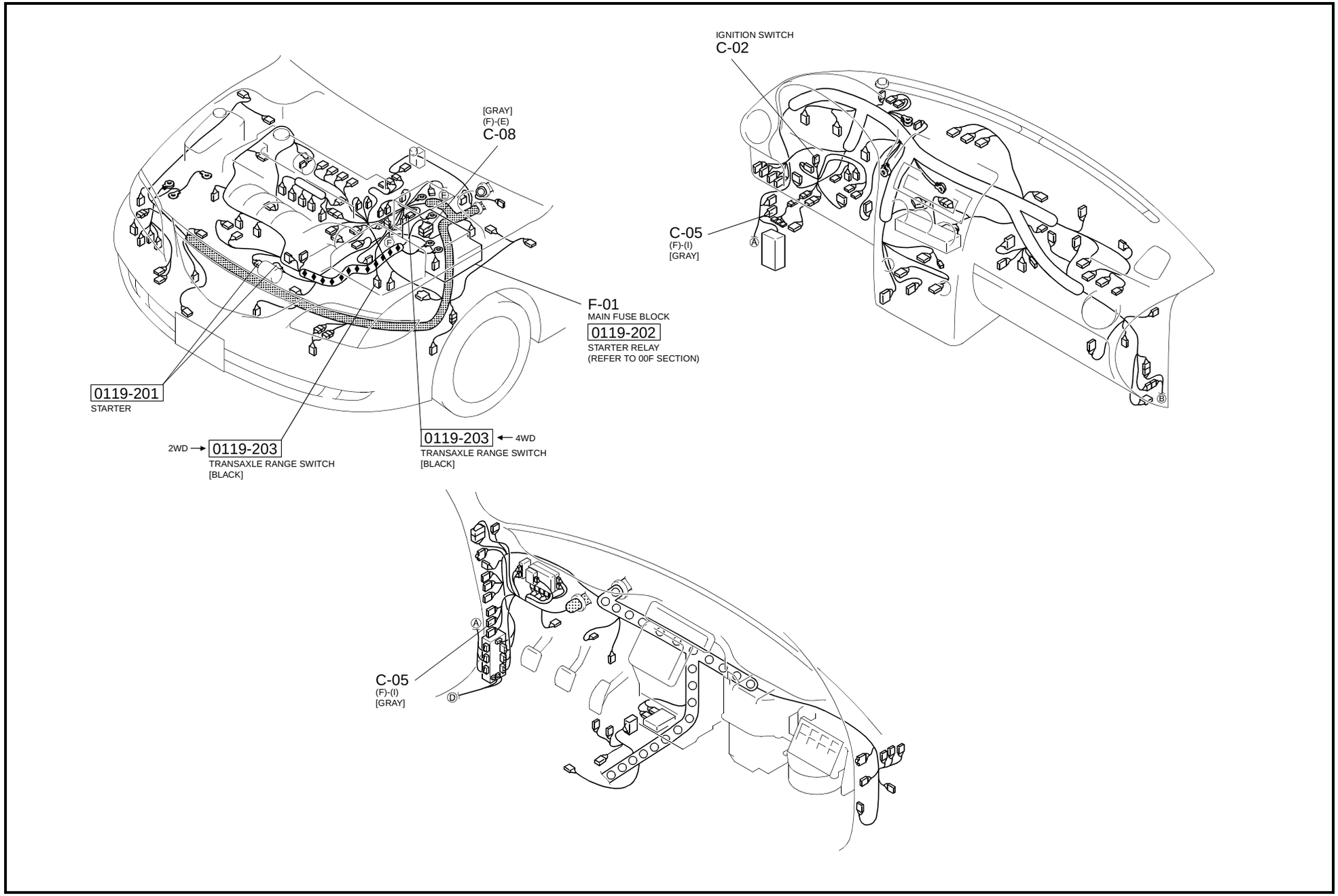

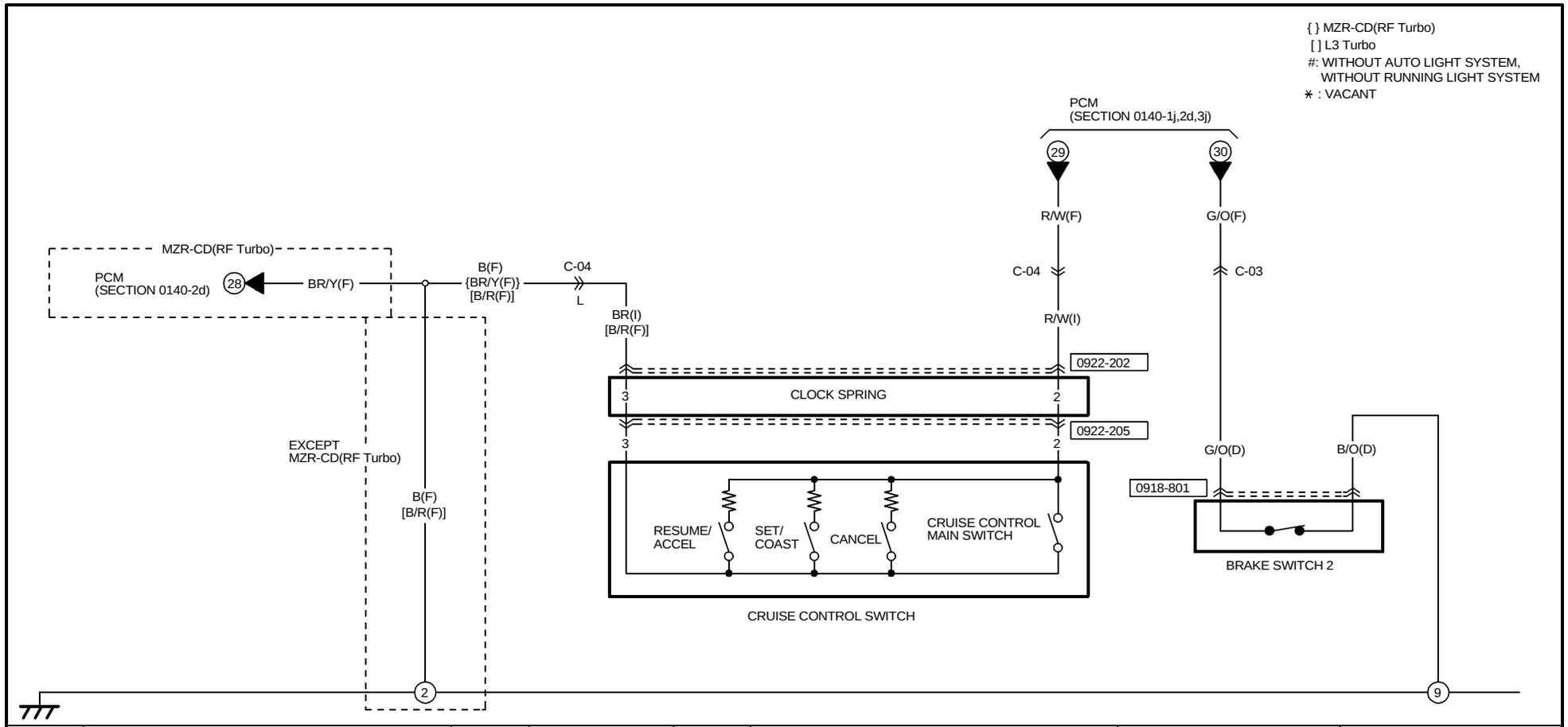

0922-202
CLOCK SPRING(I)

0918-801
BRAKE SWITCH 2(D)

0922-205
CRUISE CONTROL SWITCH(CLOCK SPRING)

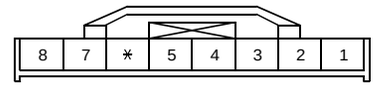

TERMINALS OF THIS CONNECTOR ARE INDICATED BY NUMBERS.

HARNESS SYMBOL : (F) (E) (D) (R)

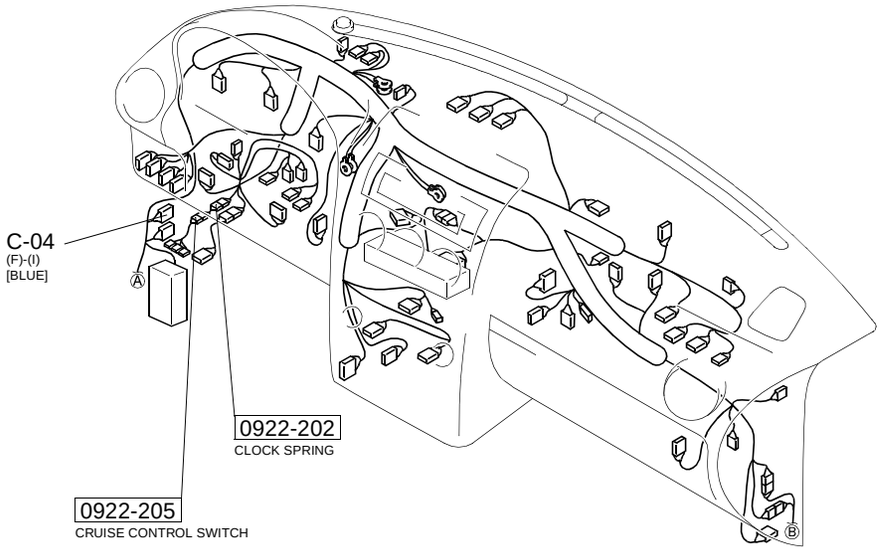

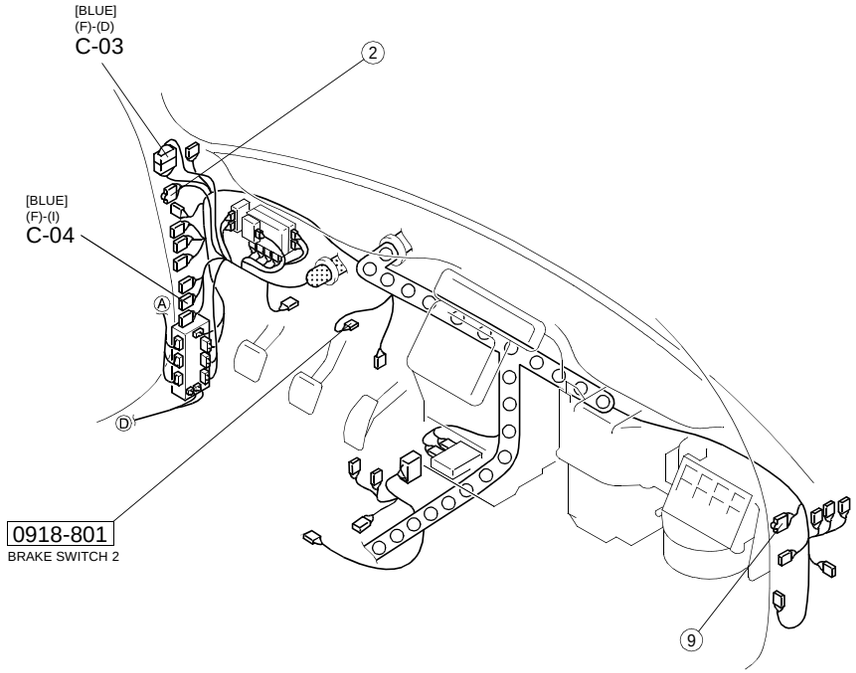

CONTROL SYSTEM (L3, LF, L8)

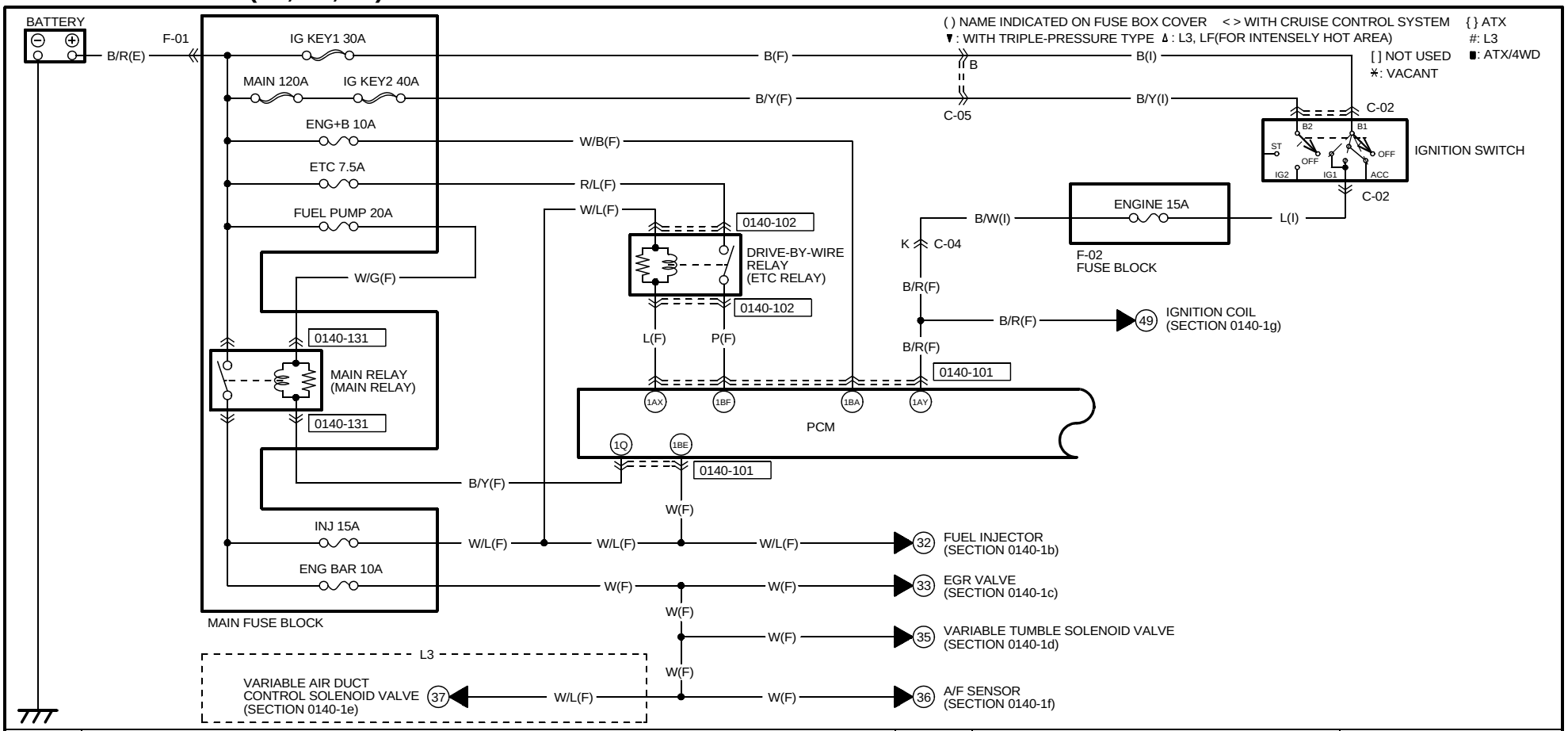

0140-101

PCM(F)

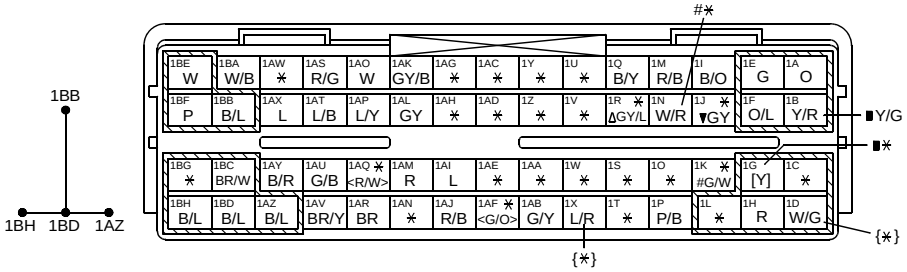

0140-102

DRIVE-BY-WIRE RELAY(F)

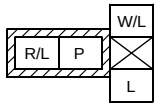

NOTE:SEEN FROM TERMINAL SIDE

0140-131

MAIN RELAY(F)

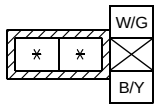

NOTE:SEEN FROM TERMINAL SIDE

https://www.MyCarManual.com

HARNESS SYMBOL : (F) (E) (D) (R)

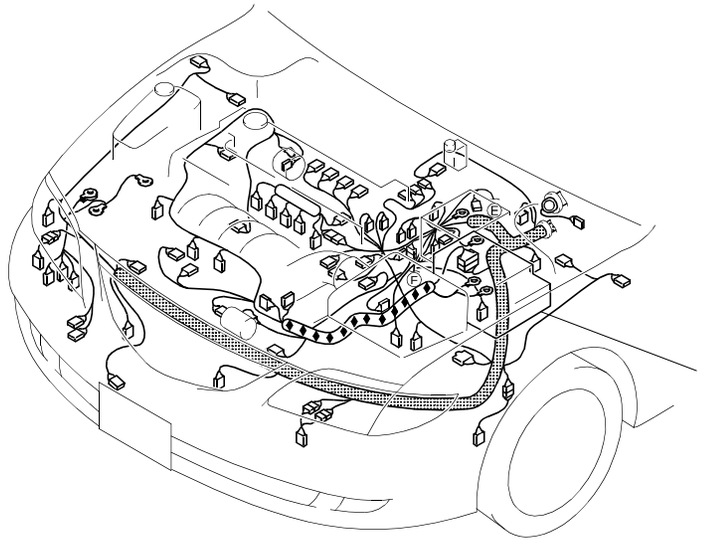

F-01
MAIN FUSE BLOCK
0140-102
DRIVE-BY-WIRE RELAY
0140-131
MAIN RELAY
(REFER TO 00F SECTION)

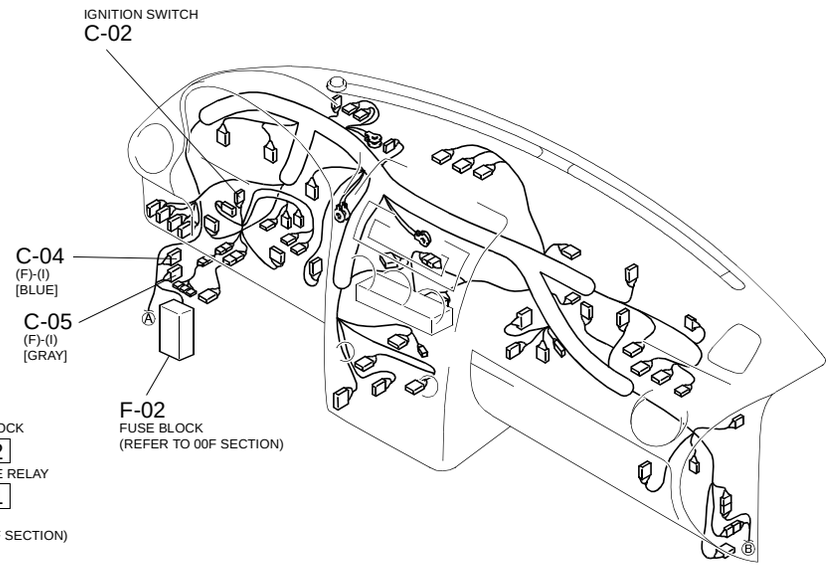

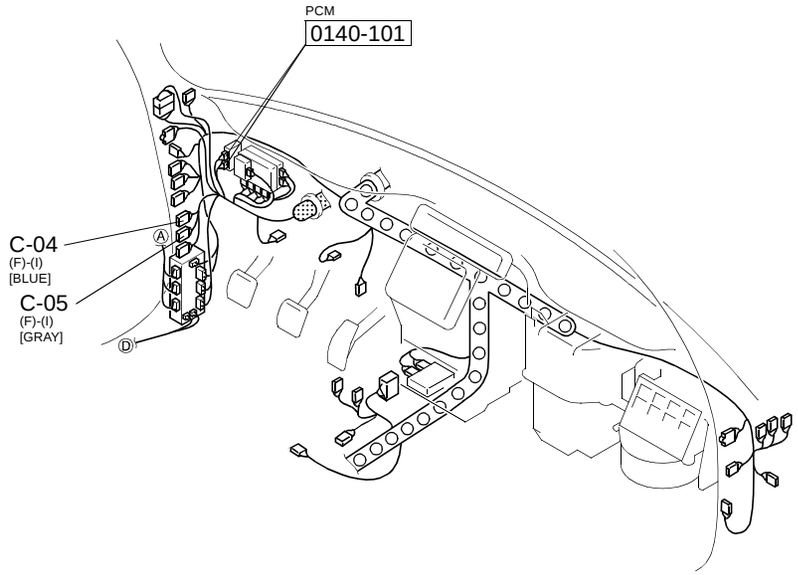

@: L8
∗: VACANT

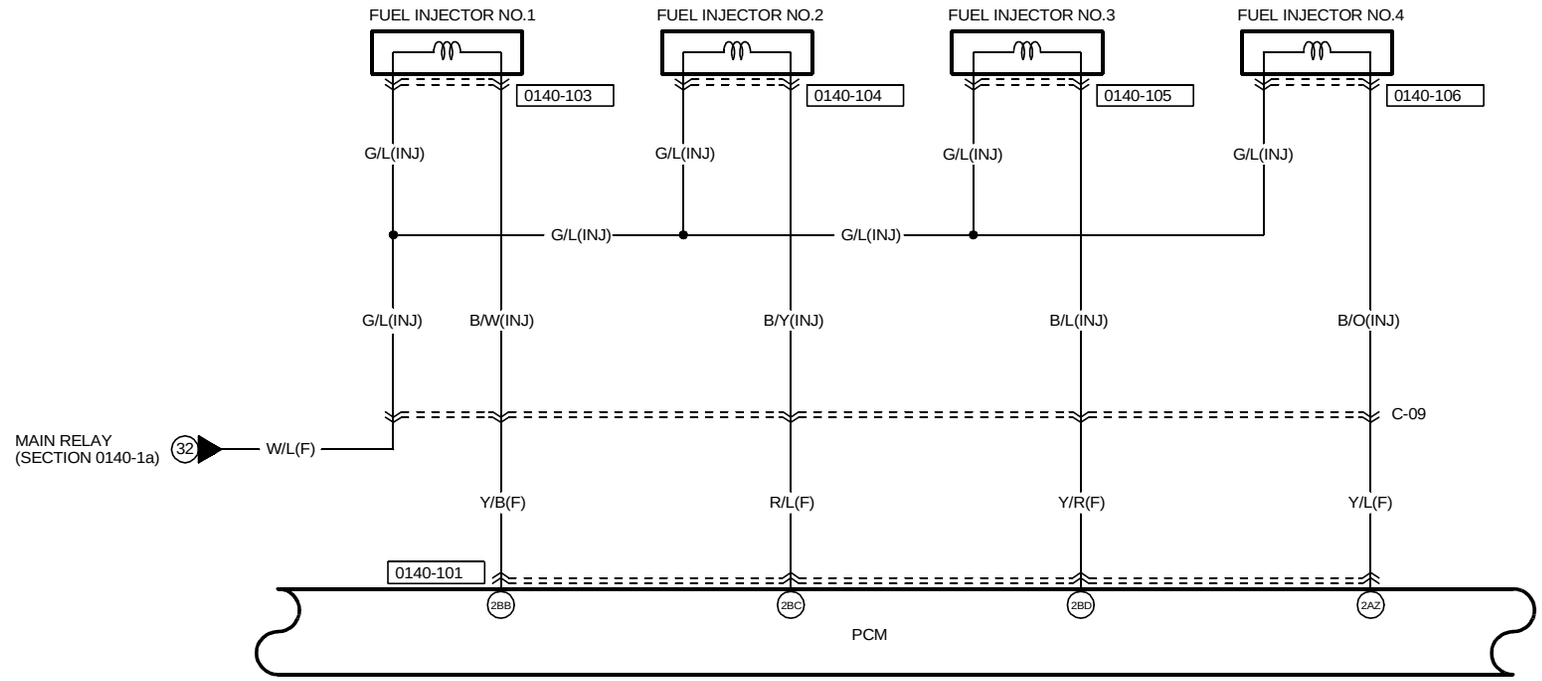

0140-101
PCM(F)

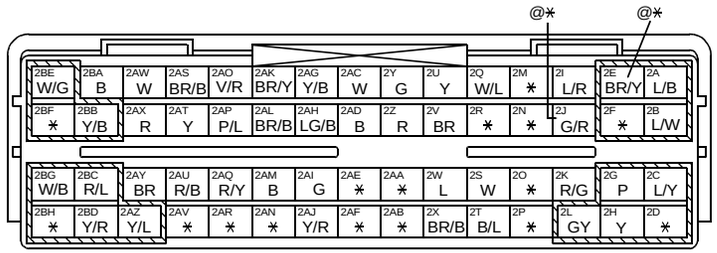

0140-103
FUEL INJECTOR NO.1(INJ)

0140-104
FUEL INJECTOR NO.2(INJ)

0140-105
FUEL INJECTOR NO.3(INJ)

0140-106
FUEL INJECTOR NO.4(INJ)

HARNESS SYMBOL : (F) (E) (D) (R)

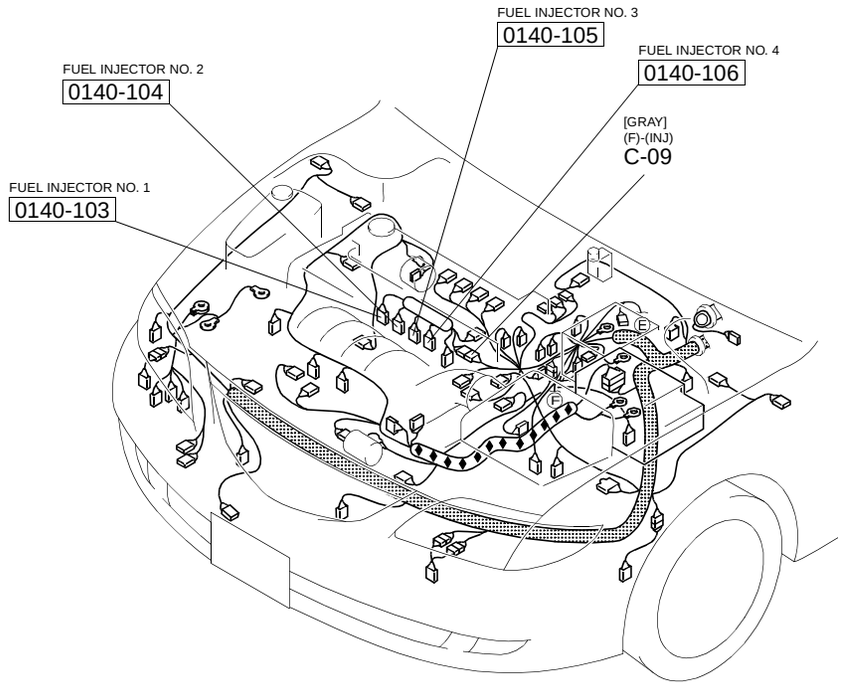

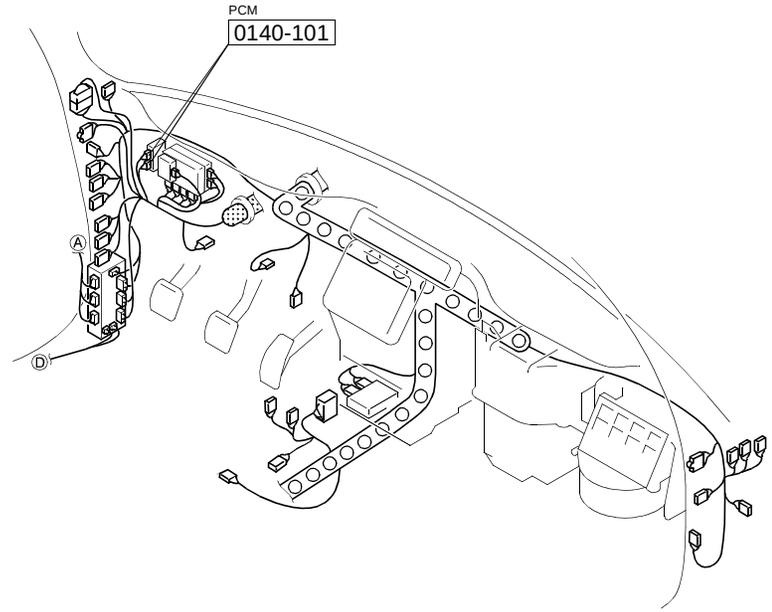

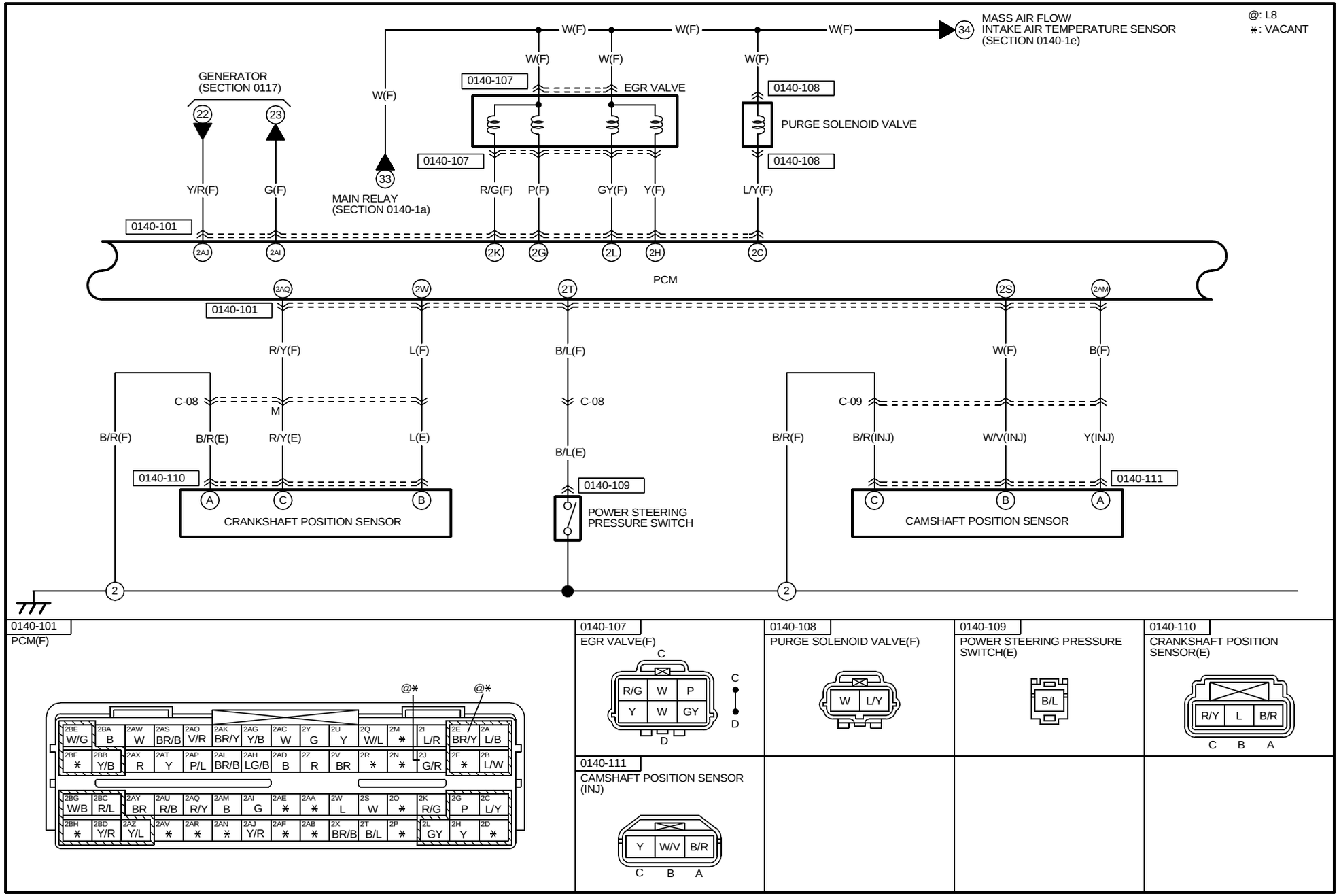

0140-101
PCM(F)

0140-107
EGR VALVE(F)

0140-108
PURGE SOLENOID VALVE(F)

0140-109
POWER STEERING PRESSURE SWITCH(E)

0140-110
CRANKSHAFT POSITION SENSOR(E)

0140-111
CAMSHAFT POSITION SENSOR (INJ)

HARNESS SYMBOL : (F) (E) (D) (R)

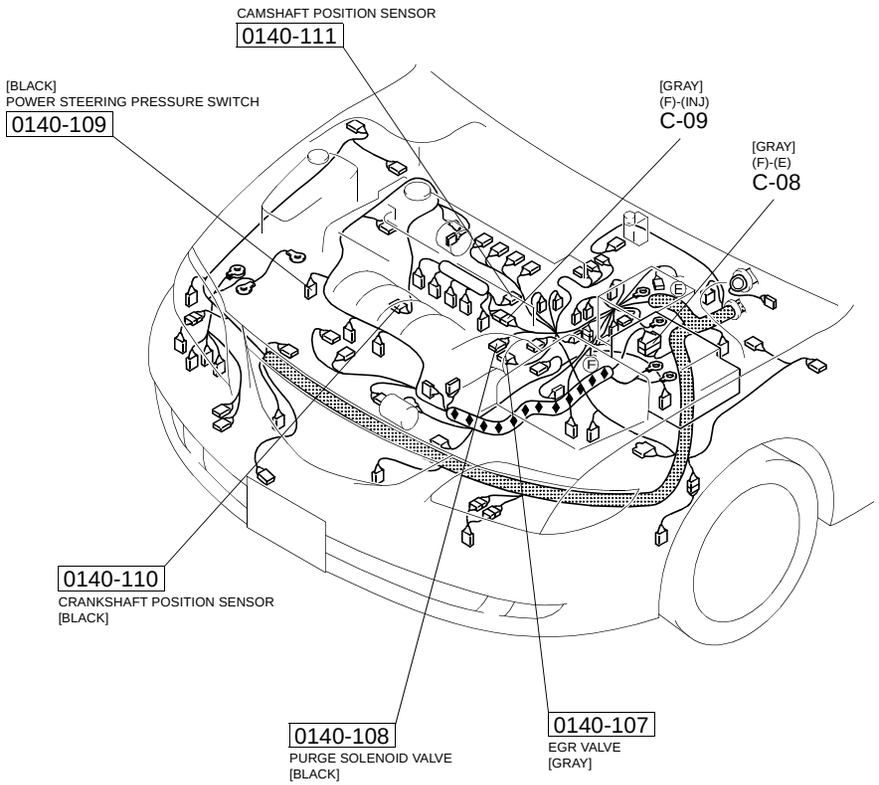

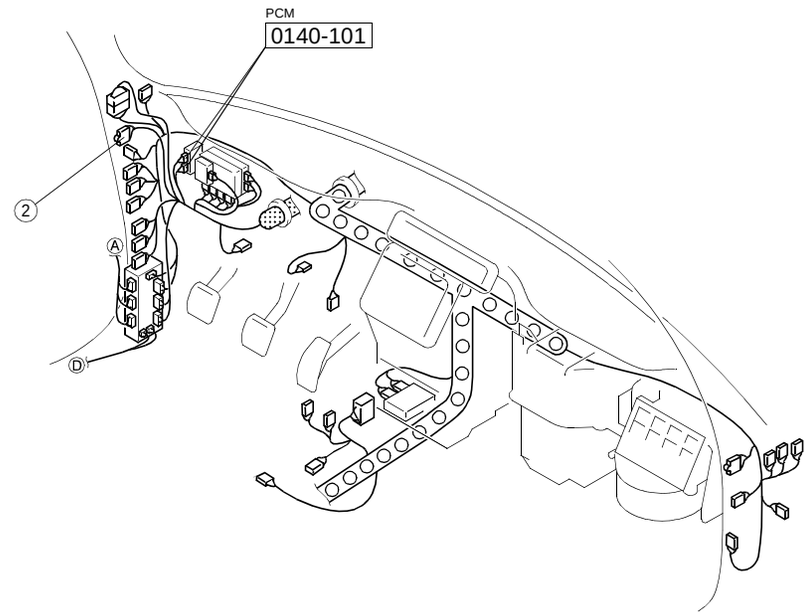

@: L8 ⁎: VACANT

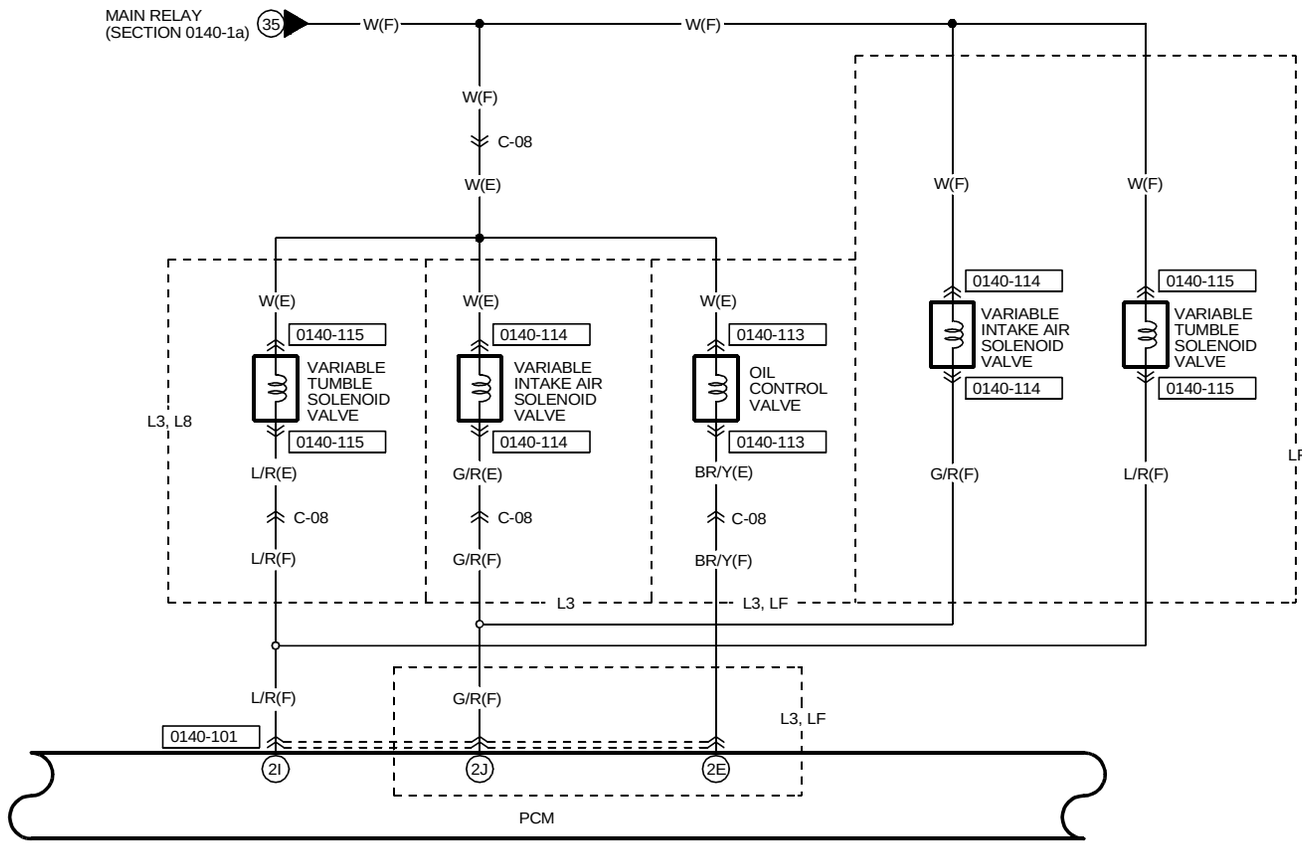

0140-101

PCM(F)

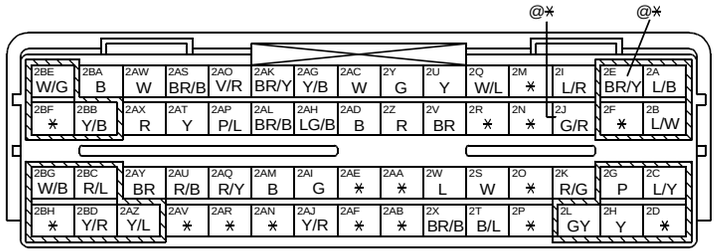

0140-113

OIL CONTROL VALVE(E)

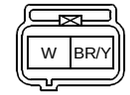

(L3, LF)

0140-114

VARIABLE INTAKE AIR SOLENOID VALVE

(F)

(LF)

(E)

(L3)

0140-115

VARIABLE TUMBLE SOLENOID VALVE
(F) ← LF
(E) ← L3, L8

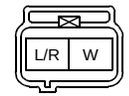

HARNESS SYMBOL : (F) (E) (D) (R)

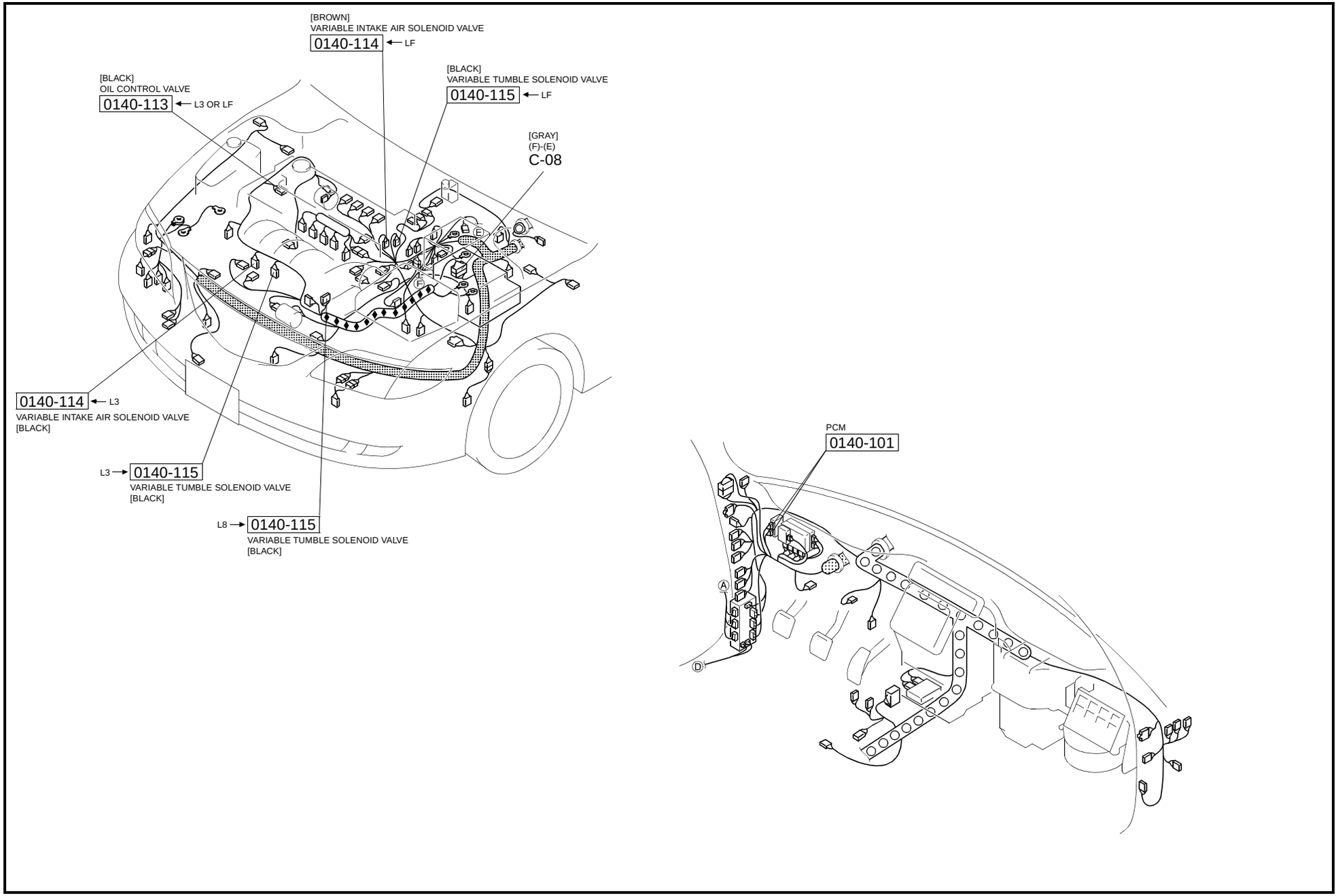

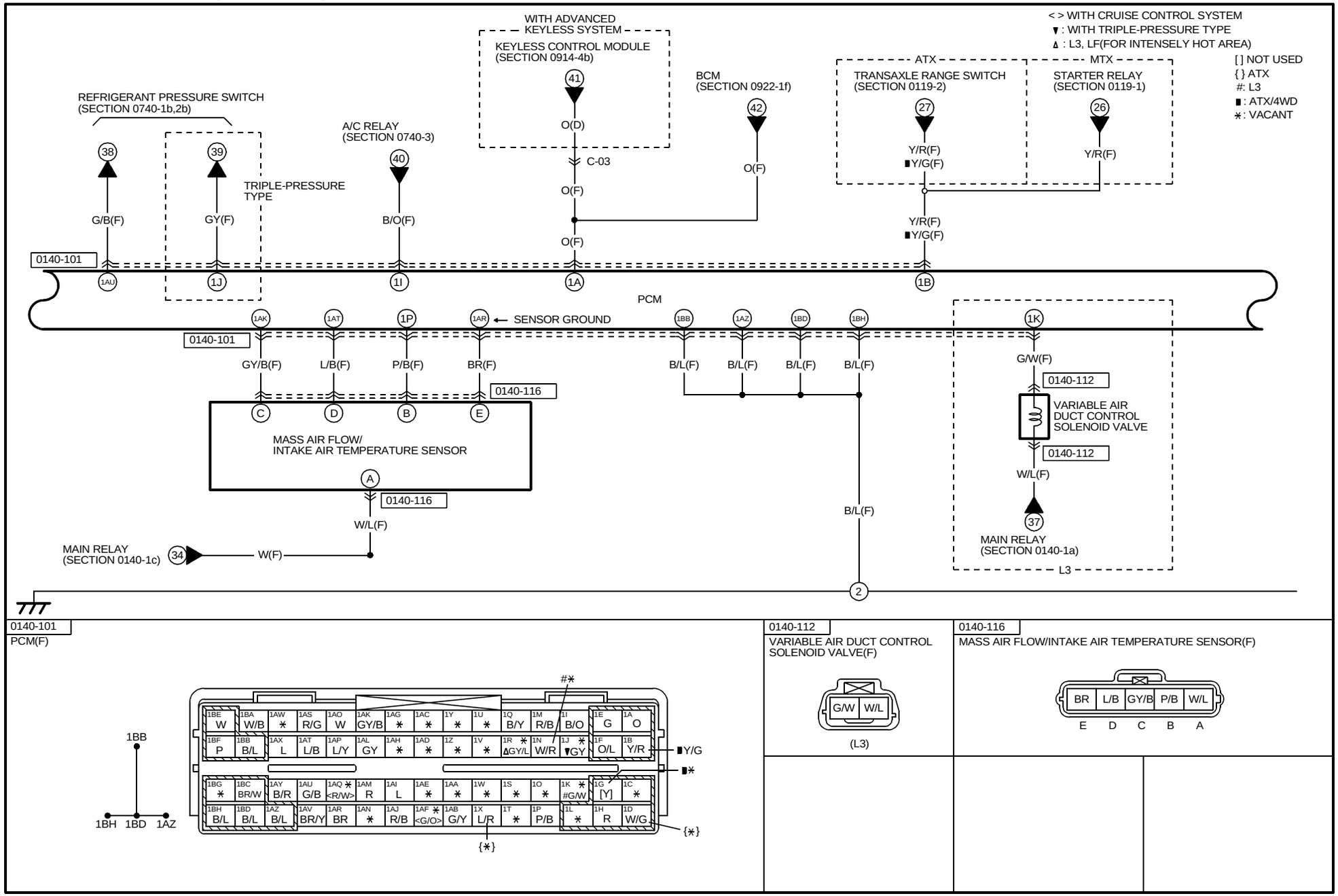

0140-101

PCM(F)

0140-112

VARIABLE AIR DUCT CONTROL SOLENOID VALVE(F)

(L3)

0140-116

MASS AIR FLOW/INTAKE AIR TEMPERATURE SENSOR(F)

HARNESS SYMBOL : (F) (E) (D) (R)

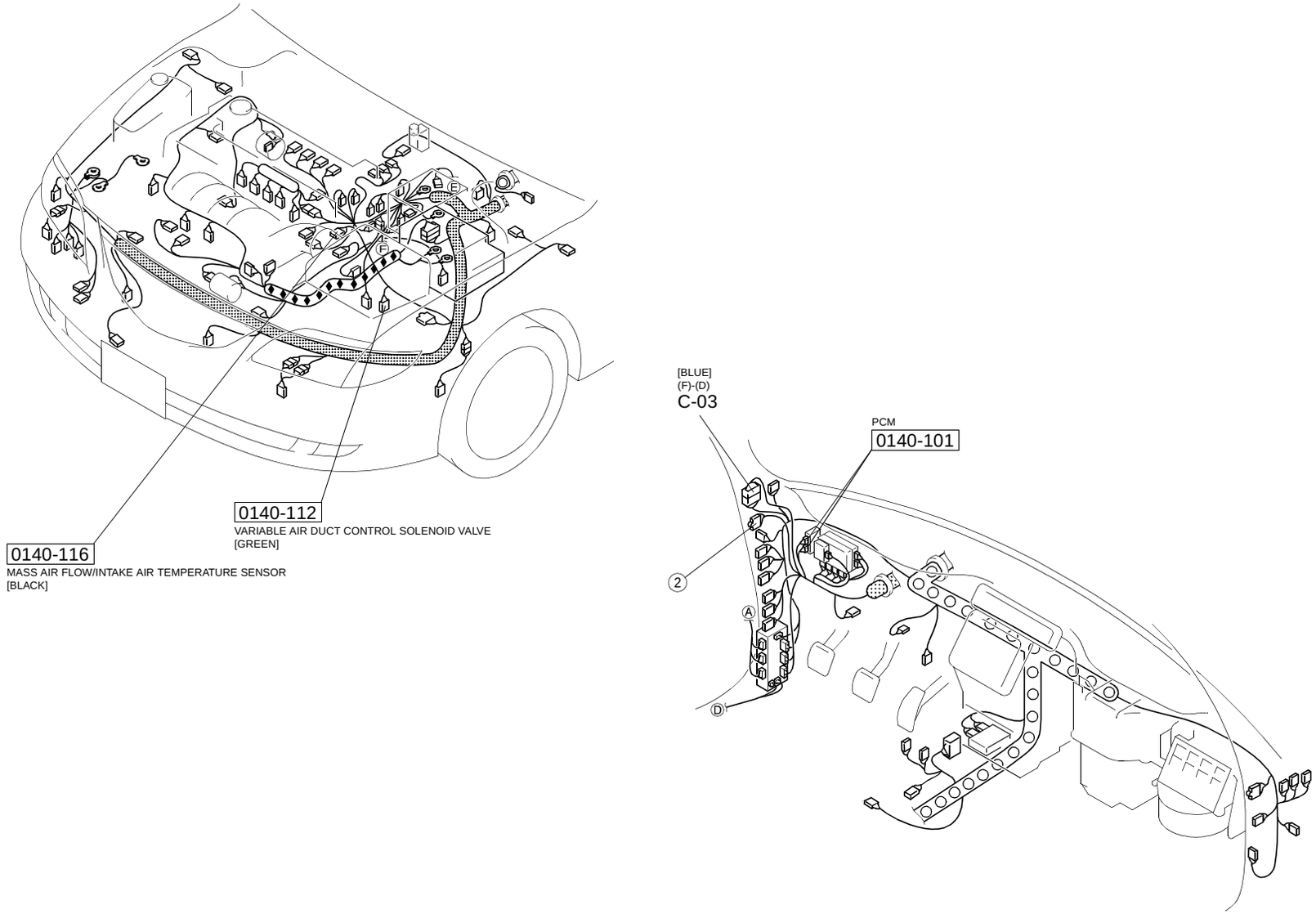

@: L8
&: WITH PCM 2Y,2AS TERMINAL
∗: VACANT

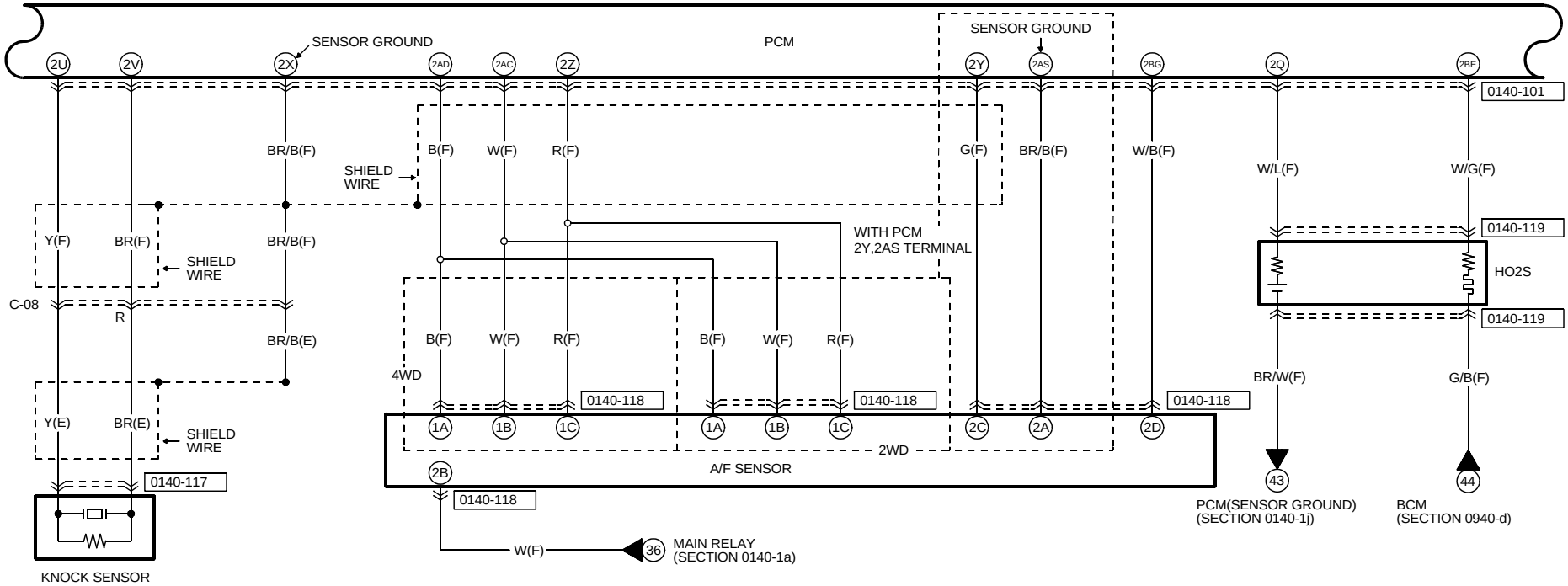

0140-101
PCM(F)

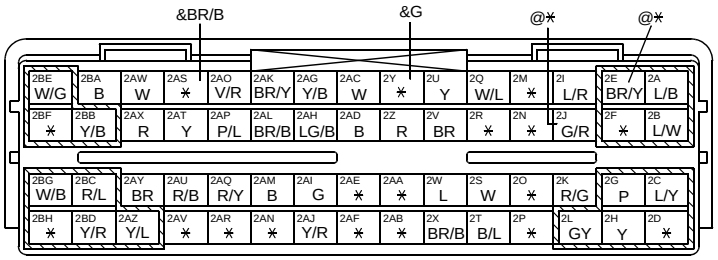

0140-117
KNOCK SENSOR(E)

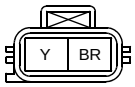

0140-118
A/F SENSOR(F)

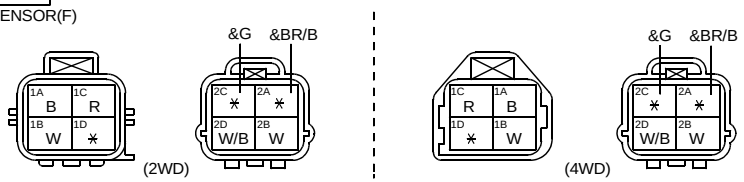

0140-119
HO2S(F)

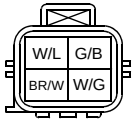

https://www.MyCarManual.com

HARNESS SYMBOL : (F) (E) (D) (R)

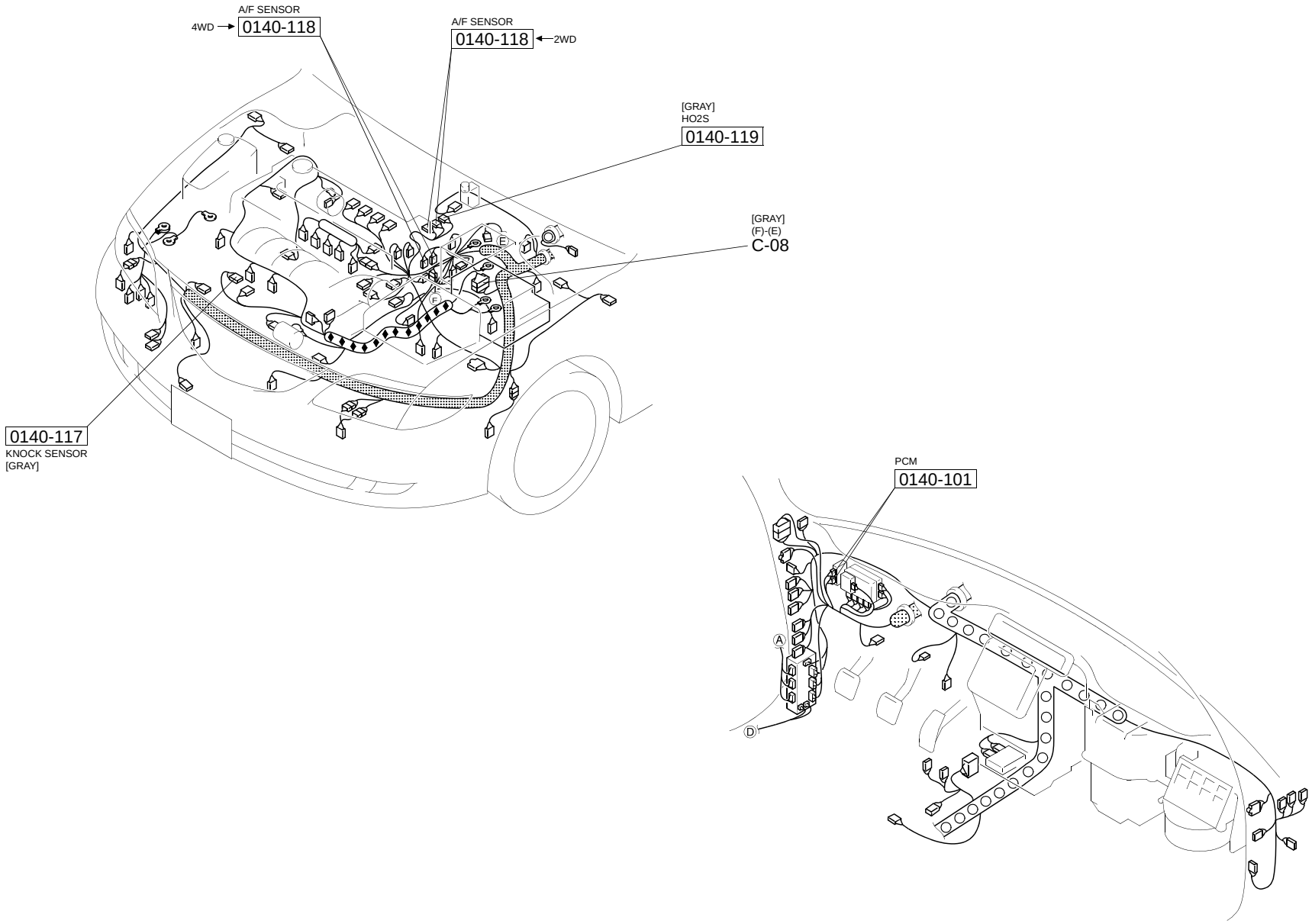

https://www.MyCarManual.com

@: L8
∗: VACANT

IGNITION COIL NO.1
NO.1
IGNITER
0140-120

IGNITION COIL NO.2
NO.2
IGNITER
0140-121

IGNITION COIL NO.3
NO.3
IGNITER
0140-122

IGNITION COIL NO.4
NO.4
IGNITER
0140-123

IGNITION SWITCH(IG1)
(SECTION 0140-1a)
49

B(F) B/L(F) B/W(F)
W(F) B/L(F) B/W(F)
R(F) B/L(F) B/W(F)
Y(F) B/L(F) B/W(F)
B/R(F)

B/L(F)
B/W(F)

0140-101
2BA 2AW 2AX 2AT
PCM

B/W(F) B/L(F)

0140-124
CONDENSER

17

0140-101
PCM(F)

@∗ @∗

2BE W/G	2BA B	2AW W	2AS BR/B	2AO V/R	2AK BR/Y	2AG Y/B	2AC W	2Y G	2U Y	2Q W/L	2M ∗	2I L/R	2E BR/Y	2A L/B	
2BF ∗	2BB Y/B	2AX R	2AT Y	2AP P/L	2AL BR/B	2AH LG/B	2AD B	2Z R	2V BR	2R ∗	2N ∗	2J G/R	2F ∗	2B L/W	
2BG W/B	2BC R/L	2AY BR	2AU R/B	2AQ R/Y	2AM B	2AI G	2AE ∗	2AA ∗	2W L	2S W	2O ∗	2K R/G	2G P	2C L/Y	
2BH ∗	2BD Y/R	2AZ Y/L	2AV ∗	2AR ∗	2AN ∗	2AJ Y/R	2AF ∗	2AB ∗	2X BR/B	2T B/L	2P ∗	2L GY	2H Y	2D ∗	

0140-120
IGNITION COIL NO.1(F)

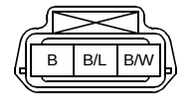

0140-121
IGNITION COIL NO.2(F)

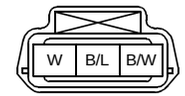

0140-122
IGNITION COIL NO.3(F)

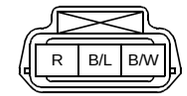

0140-123
IGNITION COIL NO.4(F)

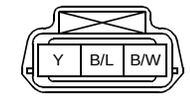

0140-124
CONDENSER(F)

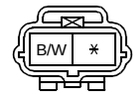

HARNESS SYMBOL : (F) (E) (D) (R)

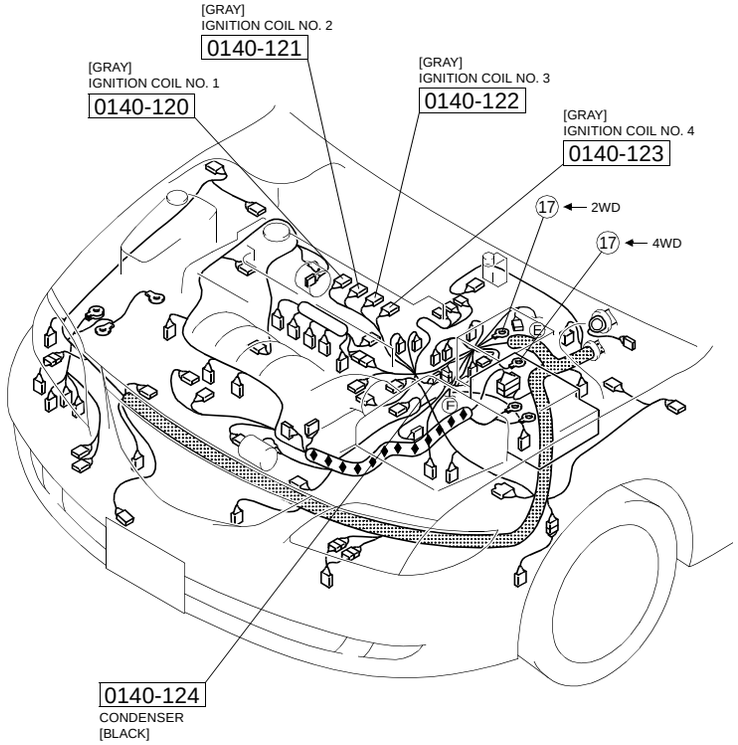

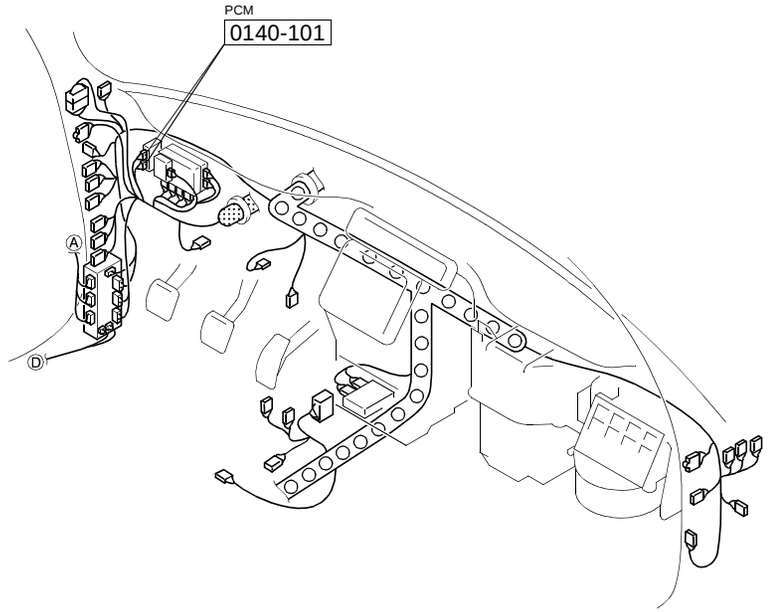

@: L8
∗: VACANT

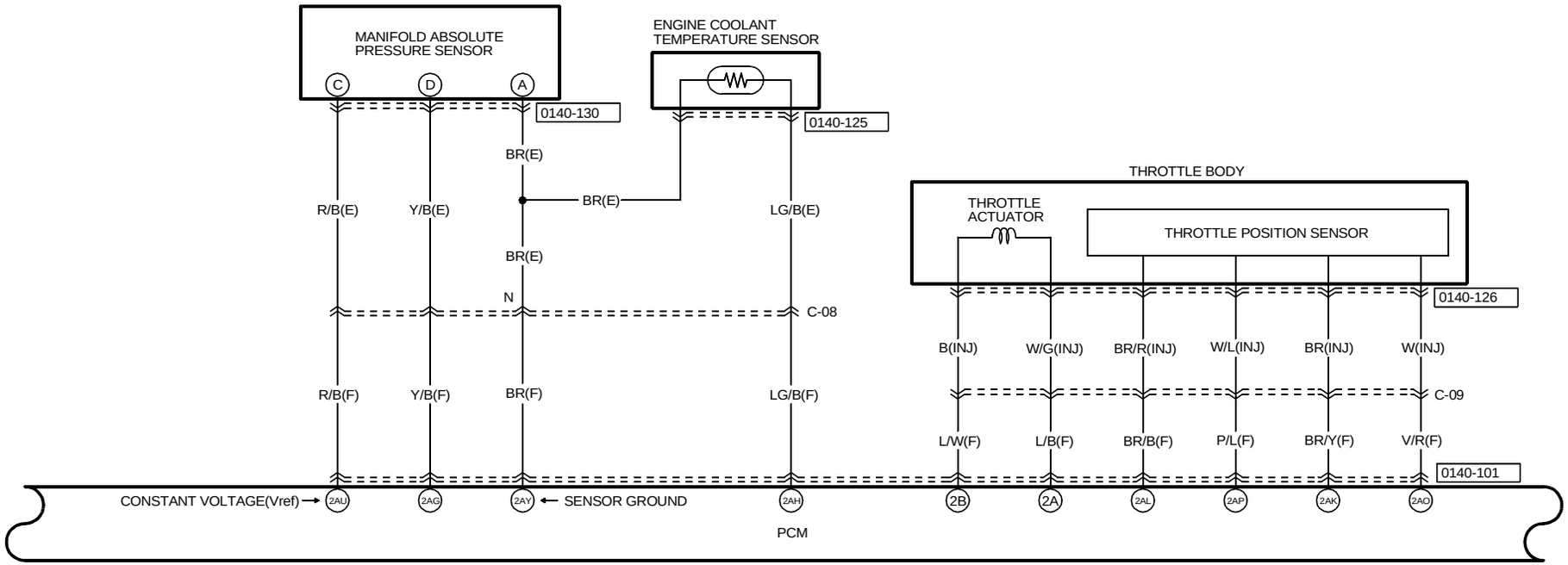

0140-101
PCM(F)

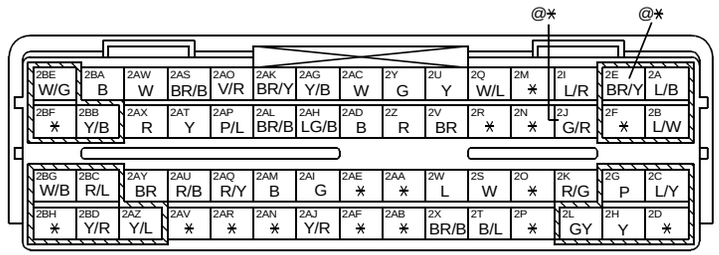

0140-125
ENGINE COOLANT TEMPERATURE SENSOR(E)

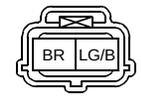

0140-126
THROTTLE BODY(INJ)

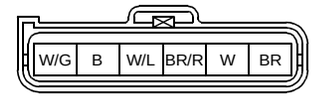

0140-130
MANIFOLD ABSOLUTE PRESSURE SENSOR(E)

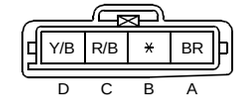

HARNESS SYMBOL : (F) (E) (D) (R)

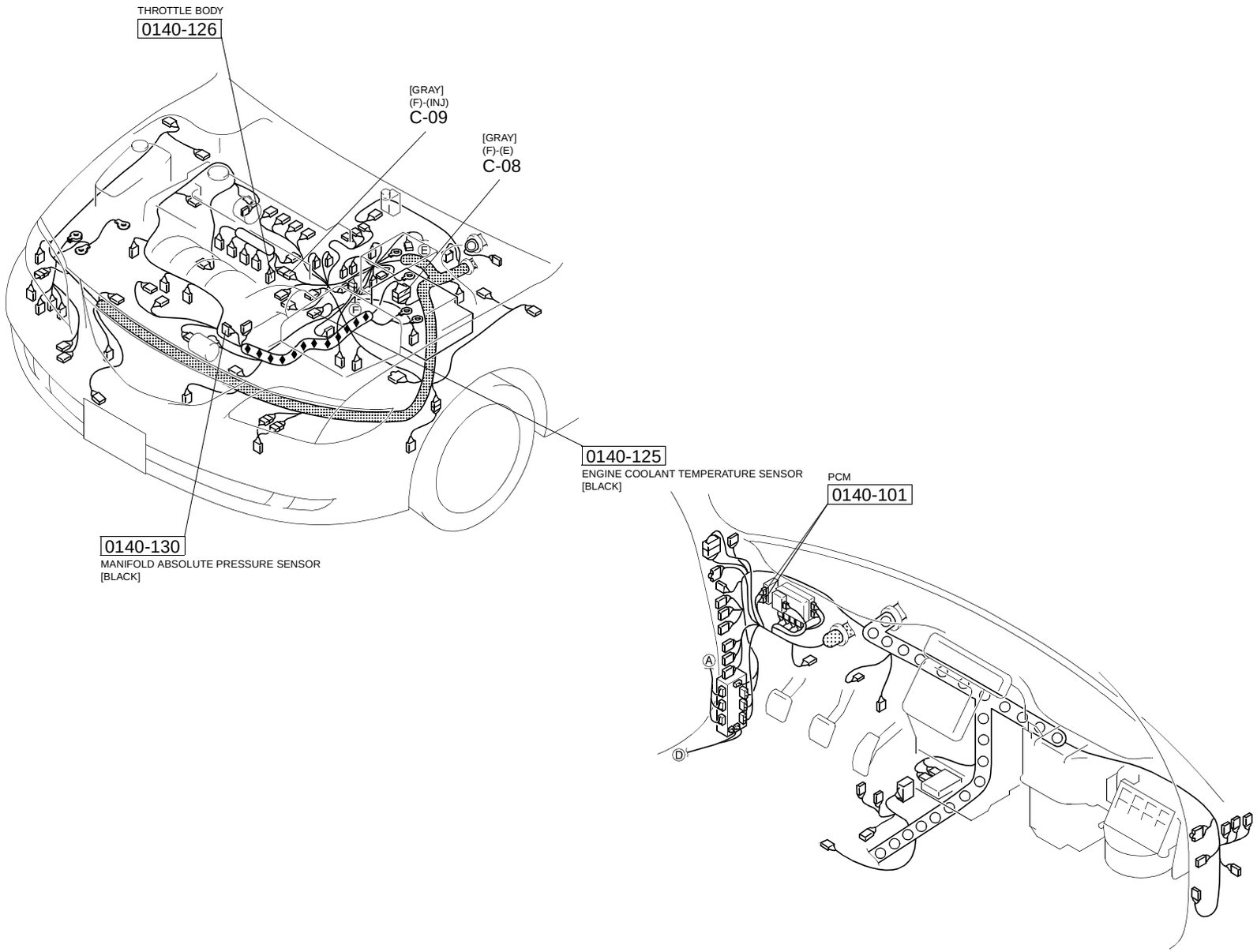

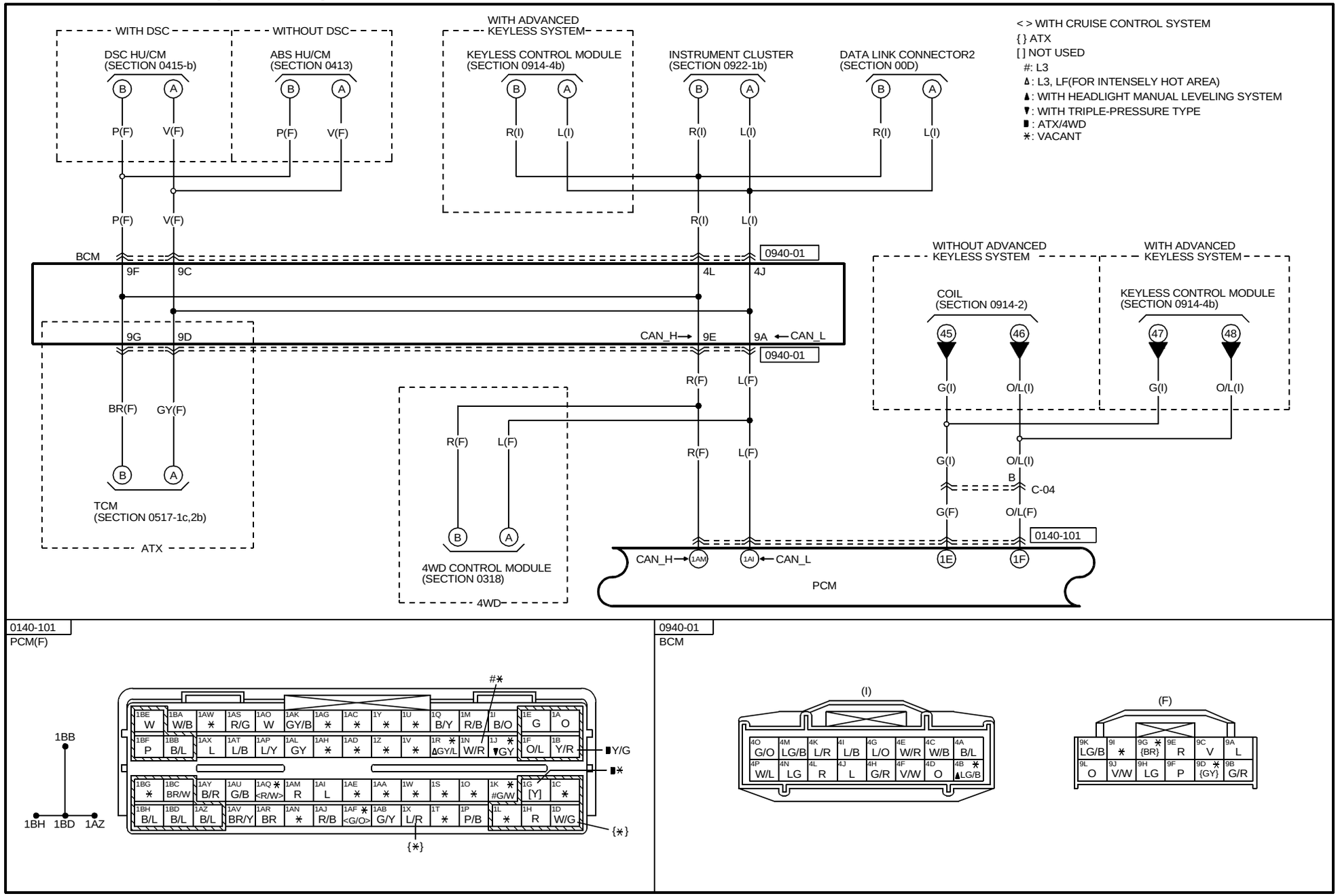
WITH DSC
WITHOUT DSC
DSC HU/CM
(SECTION 0415-b)
ABS HU/CM
(SECTION 0413)
WITH ADVANCED
KEYLESS SYSTEM
KEYLESS CONTROL MODULE
(SECTION 0914-4b)
INSTRUMENT CLUSTER
(SECTION 0922-1b)
DATA LINK CONNECTOR2
(SECTION 00D)
< > WITH CRUISE CONTROL SYSTEM
{ } ATX
[ ] NOT USED
#: L3
: L3, LF(FOR INTENSELY HOT AREA)
: WITH HEADLIGHT MANUAL LEVELING SYSTEM
: WITH TRIPLE-PRESSURE TYPE
: ATX/4WD
: VACANT
P(F)
V(F)
R(I)
L(I)
BCM
9F
9C
4L
4J
0940-01
9G
9D
CAN_H
9E
9A
CAN_L
BR(F)
GY(F)
R(F)
L(F)
TCM
(SECTION 0517-1c,2b)
ATX
4WD CONTROL MODULE
(SECTION 0318)
4WD
WITHOUT ADVANCED
KEYLESS SYSTEM
WITH ADVANCED
KEYLESS SYSTEM
COIL
(SECTION 0914-2)
KEYLESS CONTROL MODULE
(SECTION 0914-4b)
45
46
47
48
G(I)
O/L(I)
B
C-04
G(F)
O/L(F)
0140-101
1AM
1AI
1E
1F
PCM
0140-101
PCM(F)
#
1BB
1BH
1BD
1AZ
{}
0940-01
BCM
(I)
(F)

HARNESS SYMBOL : (F) (E) (D) (R)

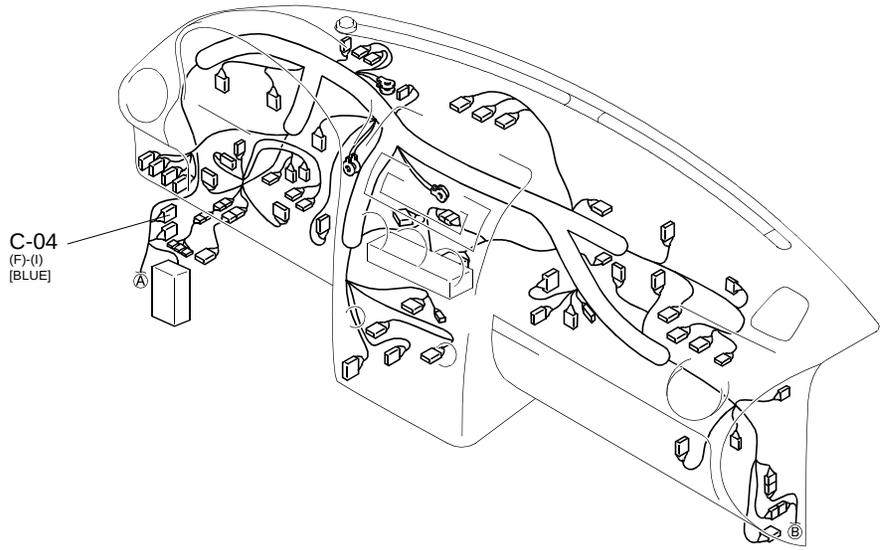

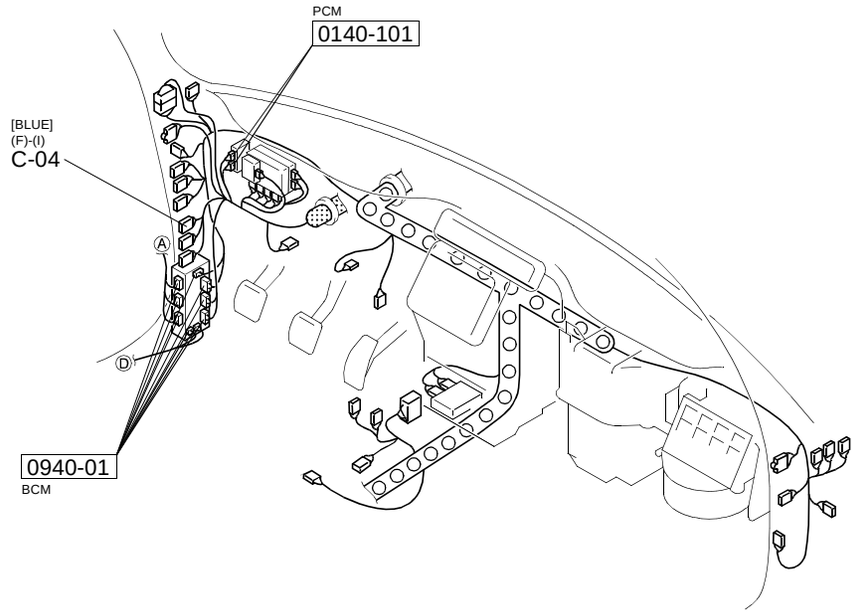

< > WITH CRUISE CONTROL SYSTEM
▼: WITH TRIPLE-PRESSURE TYPE
Δ: L3, LF(FOR INTENSELY HOT AREA)
{ } ATX
[ ] NOT USED
#: L3
■: ATX/4WD
✳: VACANT

EXCEPT L3
L3, LF(FOR INTENSELY HOT AREA)
WITH CRUISE CONTROL SYSTEM

FUEL PUMP RELAY (SECTION 0114-1) — 18 — R(F)
COOLING FAN RELAY (SECTION 0112-2,3) — 31 — W/R(F)
COOLING FAN RELAY (SECTION 0112-1,3) — 12 — GY/L(F)
BCM (SECTION 0918-8a) — 50 — G/Y(F)
BRAKE SWITCH 2 (SECTION 0120) — 30 — G/O(F)
CRUISE CONTROL SWITCH (SECTION 0120) — 29 — R/W(F)

0140-101: 1H, 1N, 1R, 1AB, 1AF, 1AQ

PCM

CONSTANT VOLTAGE(Vref) — 1AJ
SENSOR GROUND — 1AV, 1AP, 1AS, 1AO, 1AL
SENSOR GROUND — 1BC
1M, 1X, 1D

0140-101: R/B(F), BR/Y(F), L/Y(F), R/G(F), W(F), GY(F)
D — C-03
0140-129: R/B(D), BR(D), L/Y(D), R/G(D), W(D), GY(D)
0140-129: A, B, C, E, F, D
ACCELERATOR PEDAL POSITION SENSOR

R/B(F) — 11 — COOLING FAN RELAY NO.2 (SECTION 0112-1,2,3)
BR/W(F) — 43 — HO2S (SECTION 0140-1f)

L/R(F) — 0140-127 — NEUTRAL SWITCH — 0140-127 — B(F)
W/G(F) — 0140-128 — CLUTCH PEDAL POSITION SWITCH — 0140-128 — B(F)
B(F) — 2 — MTX

0140-101
PCM(F)

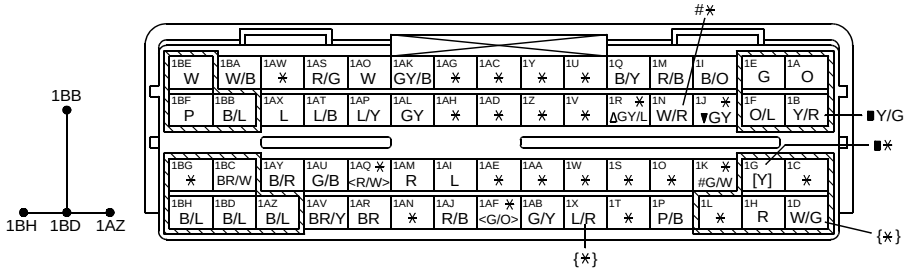

0140-127
NEUTRAL SWITCH(F)

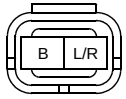

(MTX)

0140-128
CLUTCH PEDAL POSITION SWITCH(F)

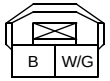

(MTX)

0140-129
ACCELERATOR PEDAL POSITION SENSOR(D)

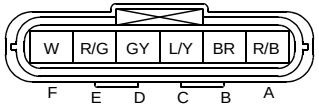

https://www.MyCarManual.com

HARNESS SYMBOL : (F) (E) (D) (R)

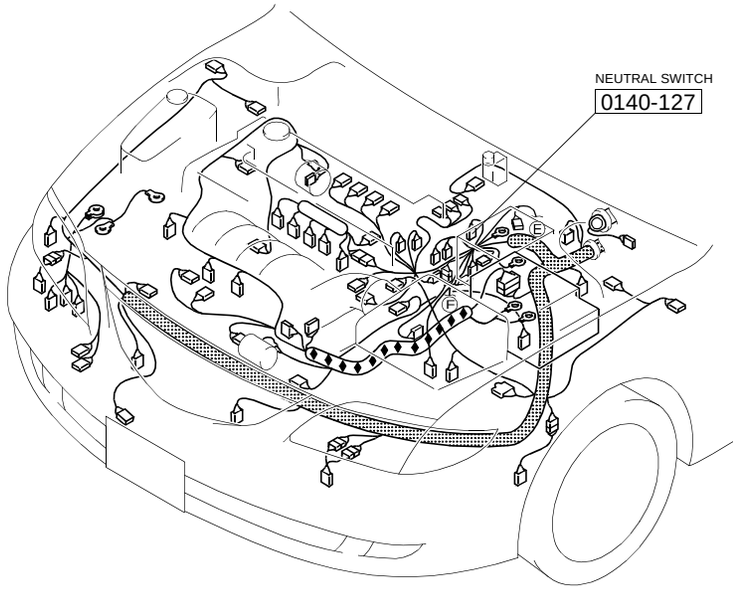

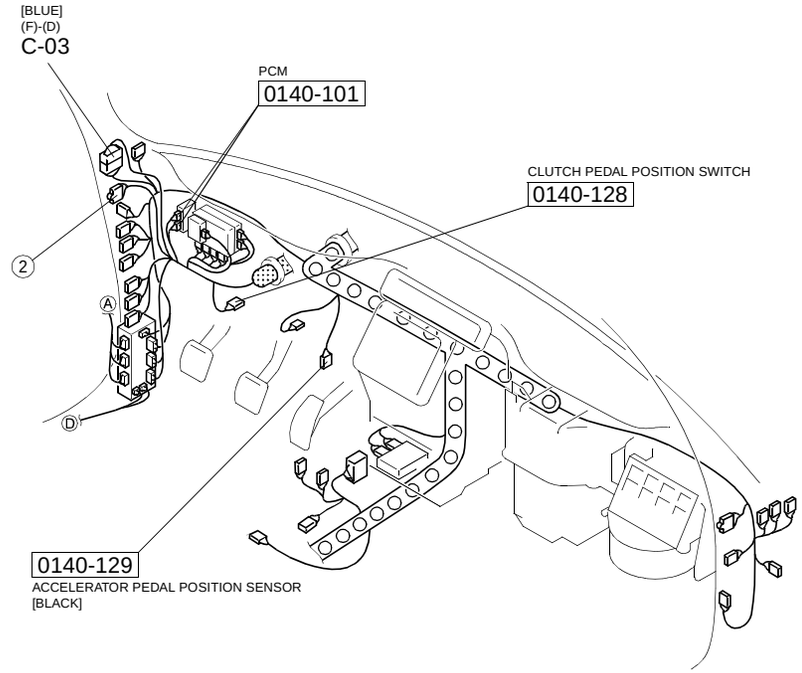

CONTROL SYSTEM (MZR-CD (RF Turbo))

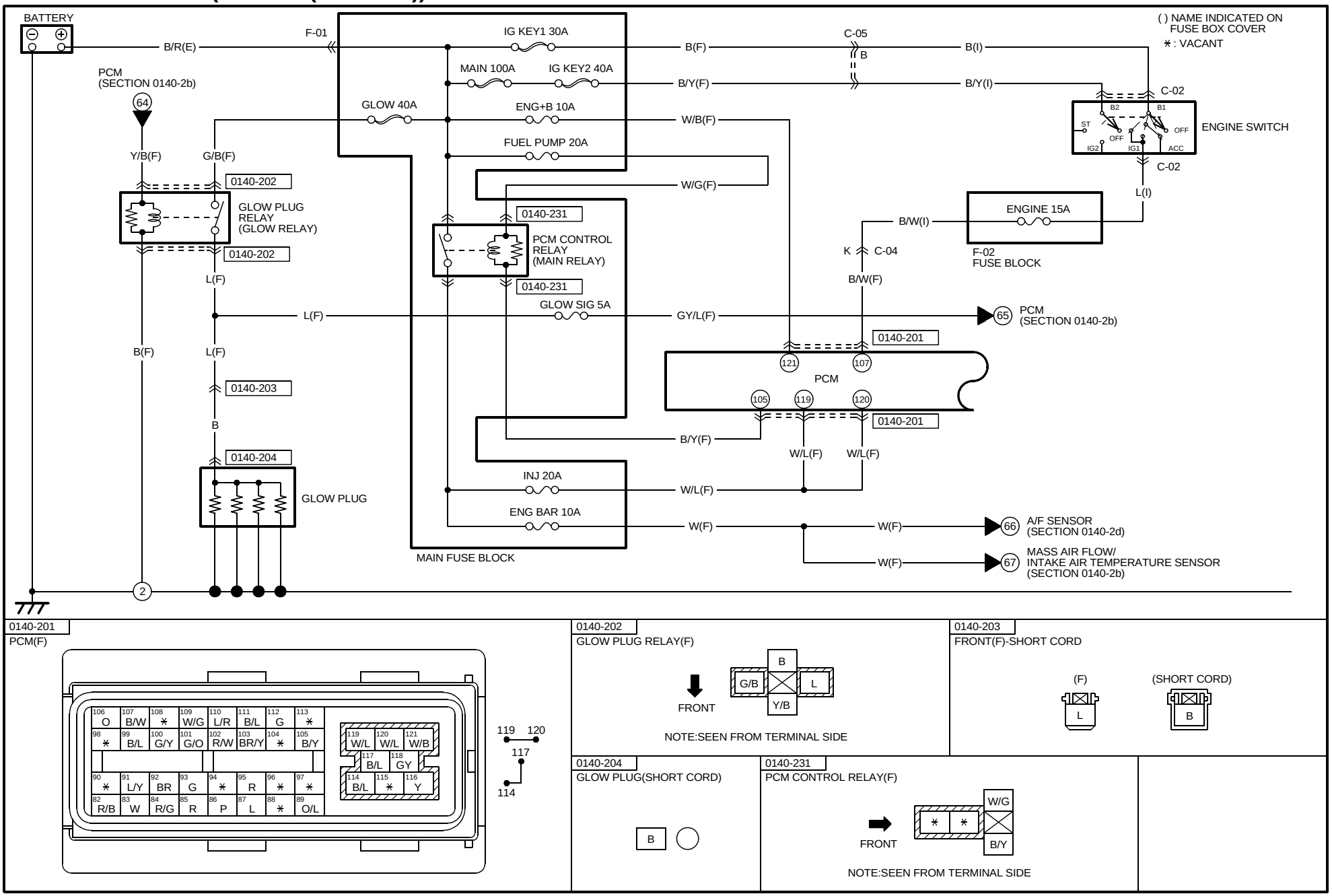

https://www.MyCarManual.com

HARNESS SYMBOL : (F) (E) (D) (R)

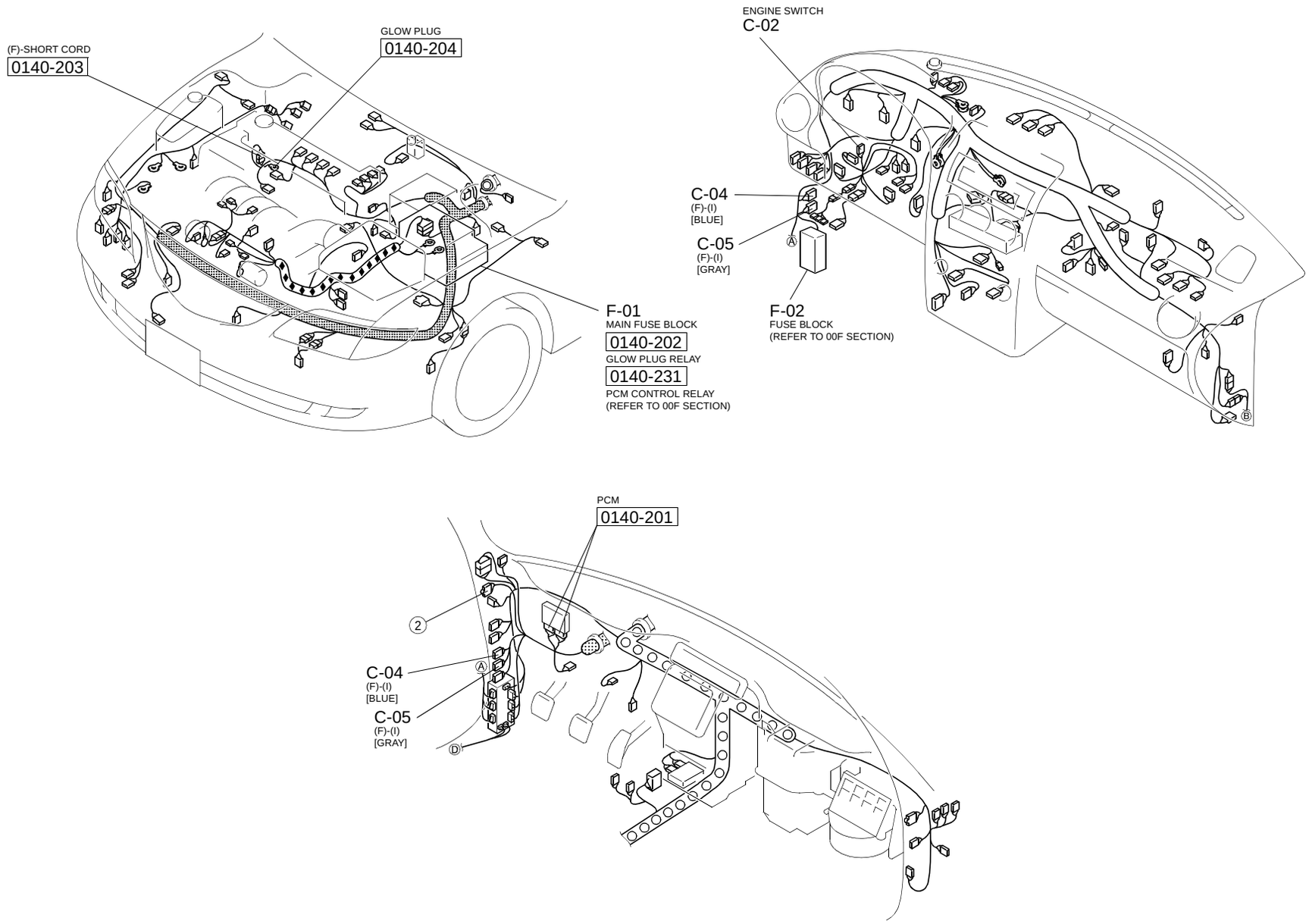

< > NOT USED
⁎ : VACANT

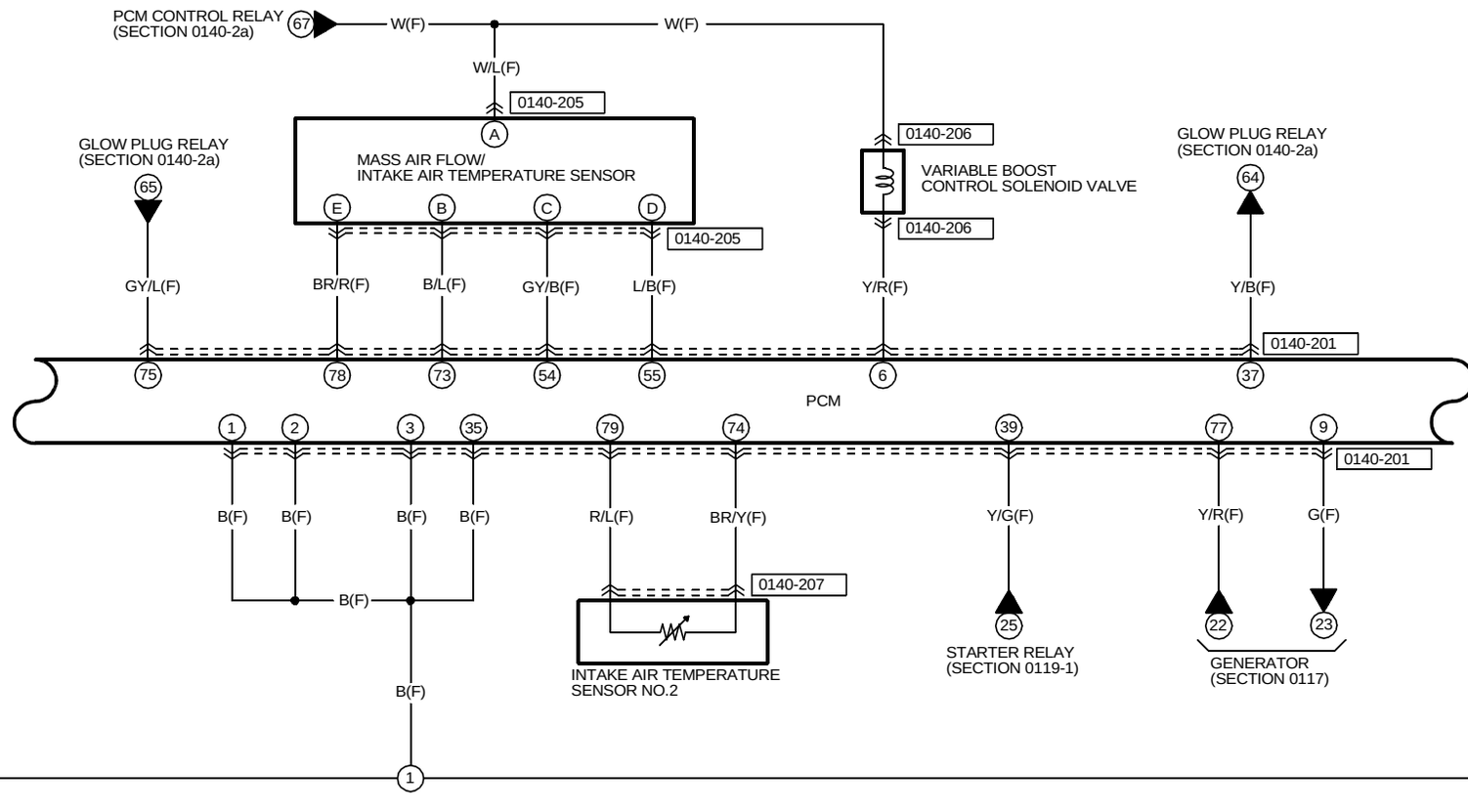

0140-201
PCM(F)

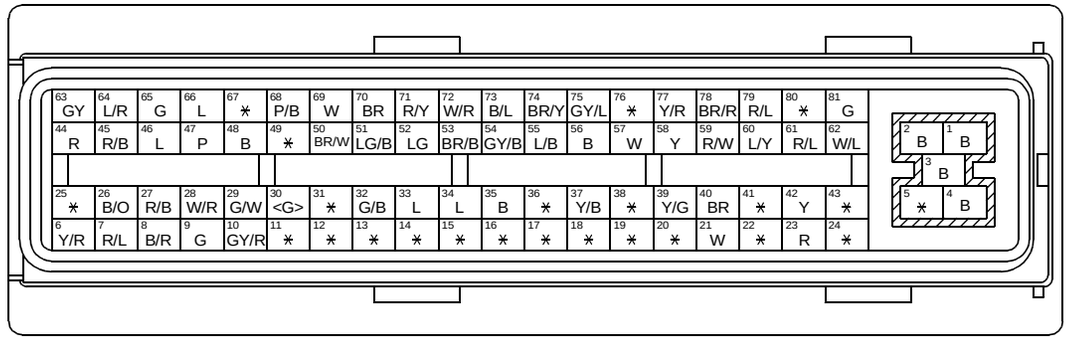

0140-205
MASS AIR FLOW/INTAKE AIR TEMPERATURE SENSOR(F)

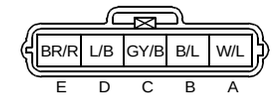

0140-206
VARIABLE BOOST CONTROL SOLENOID VALVE(F)

0140-207
INTAKE AIR TEMPERATURE SENSOR NO.2(F)

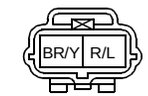

HARNESS SYMBOL : (F) (E) (D) (R)

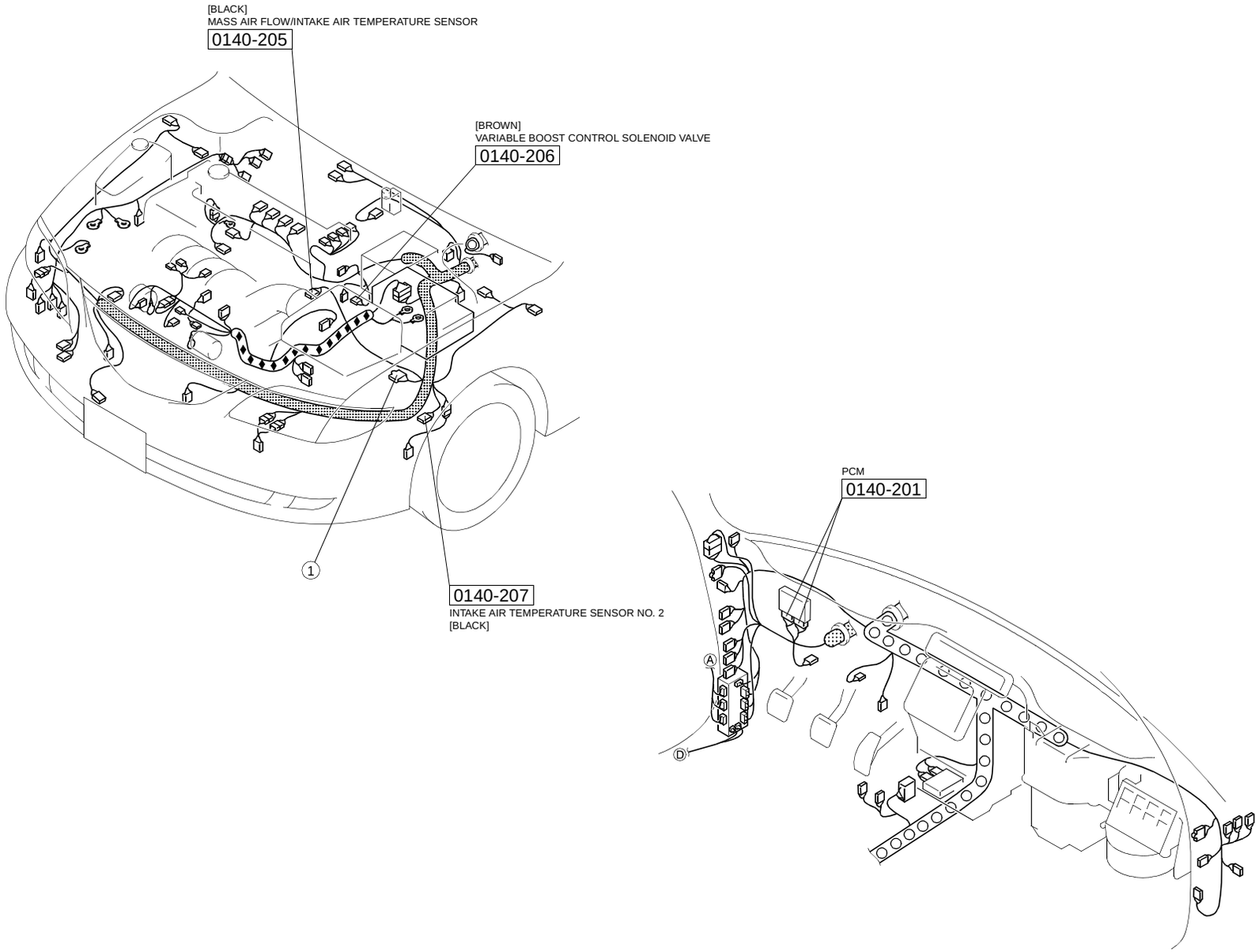

< > NOT USED
*: VACANT

FUEL INJECTOR NO.1
FUEL INJECTOR NO.2
FUEL INJECTOR NO.3
FUEL INJECTOR NO.4

0140-208
0140-209
0140-210
0140-211

SHIELD WIRE
B(F)
Y(F)
W(F)
R(F)
BR(F)

0140-201

CONSTANT VOLTAGE(Vref)
PCM

GY(F)
B/O(F)
R/B(F)
W/R(F)
G/B(F)
L(F)

ACCELERATOR PEDAL POSITION SENSOR (SECTION 0140-2d)
A/C RELAY (SECTION 0740-3)
COOLING FAN RELAY (SECTION 0112-2)
REFRIGERANT PRESSURE SWITCH (SECTION 0740-2b)
A/F SENSOR (SECTION 0140-2d)

0140-201
PCM(F)

63 GY	64 L/R	65 G	66 L	67 *	68 P/B	69 W	70 BR	71 R/Y	72 W/R	73 B/L	74 BR/Y	75 GY/L	76 *	77 Y/R	78 BR/R	79 R/L	80 *	81 G					
44 R	45 R/B	46 L	47 P	48 B	49 *	50 BR/W	51 LG/B	52 LG	53 BR/B	54 GY/B	55 L/B	56 B	57 W	58 Y	59 R/W	60 L/Y	61 R/L	62 W/L					
25 *	26 B/O	27 R/B	28 W/R	29 G/W	30 <G>	31 *	32 G/B	33 L	34 L	35 B	36 *	37 Y/B	38 *	39 Y/G	40 BR	41 *	42 Y	43 *					
6 Y/R	7 R/L	8 B/R	9 G	10 GY/R	11 *	12 *	13 *	14 *	15 *	16 *	17 *	18 *	19 *	20 *	21 W	22 *	23 R	24 *					

2 B 1 B
3 B
5 * 4 B

2 1
3

0140-208
FUEL INJECTOR NO.1(F)
B Y

0140-209
FUEL INJECTOR NO.2(F)
B W

0140-210
FUEL INJECTOR NO.3(F)
B R

0140-211
FUEL INJECTOR NO.4(F)
B BR

https://www.MyCarManual.com

HARNESS SYMBOL : (F) (E) (D) (R)

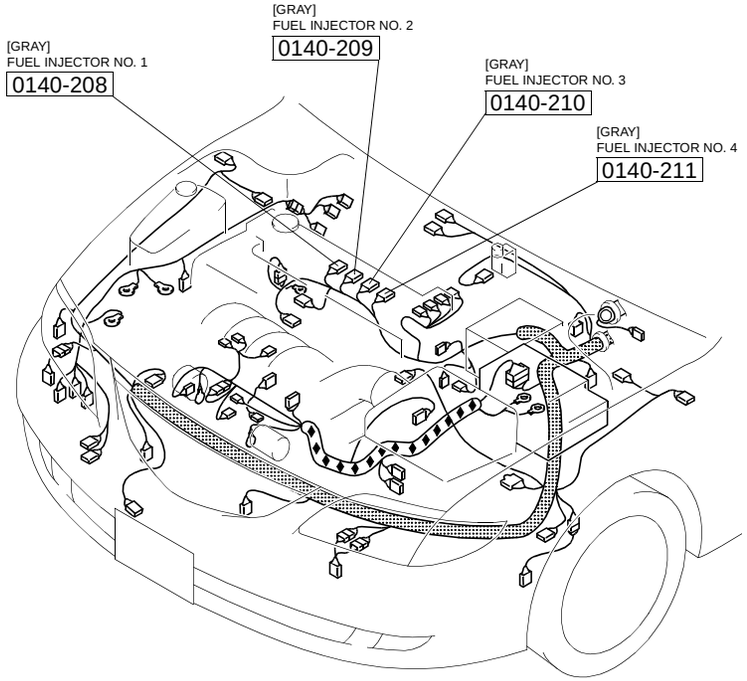

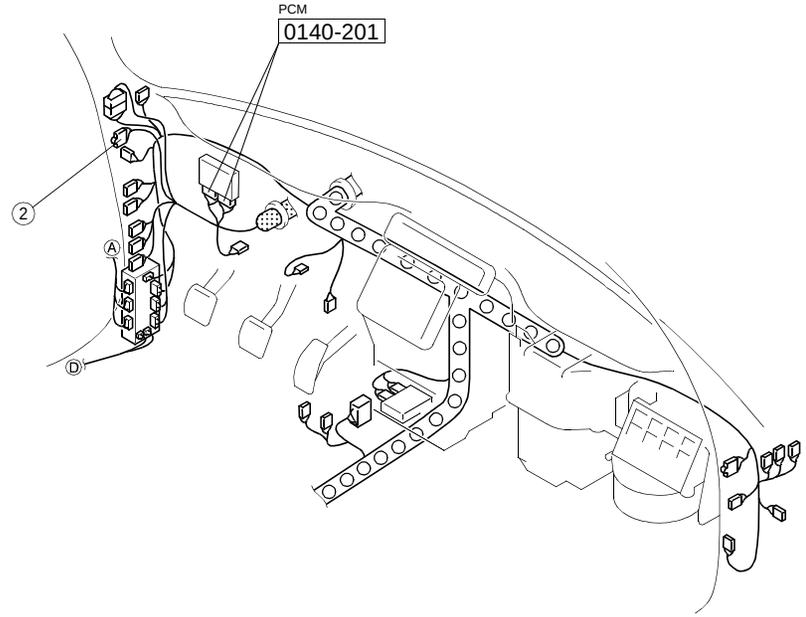

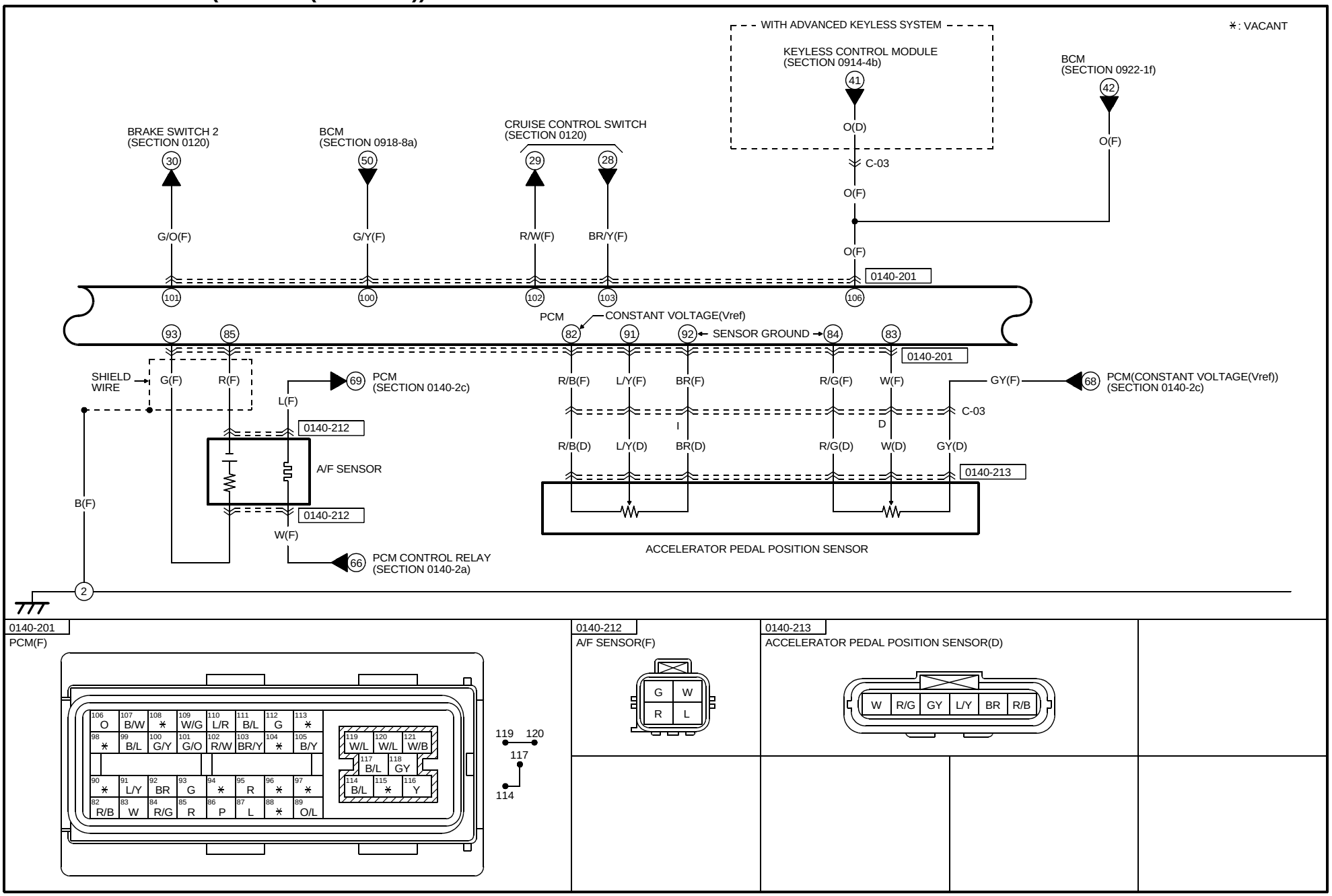

0140-201

PCM(F)

0140-212

A/F SENSOR(F)

0140-213

ACCELERATOR PEDAL POSITION SENSOR(D)

https://www.MyCarManual.com

HARNESS SYMBOL : (F) (E) (D) (R)

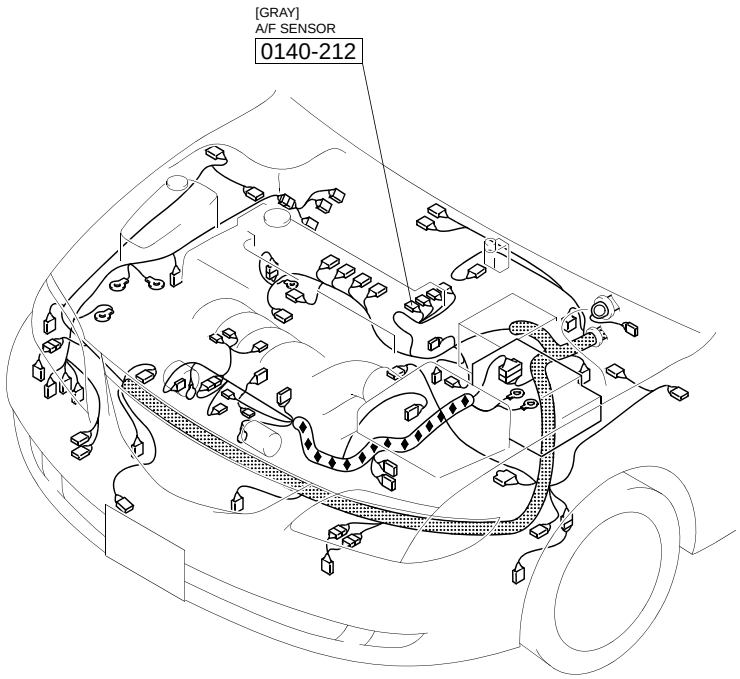

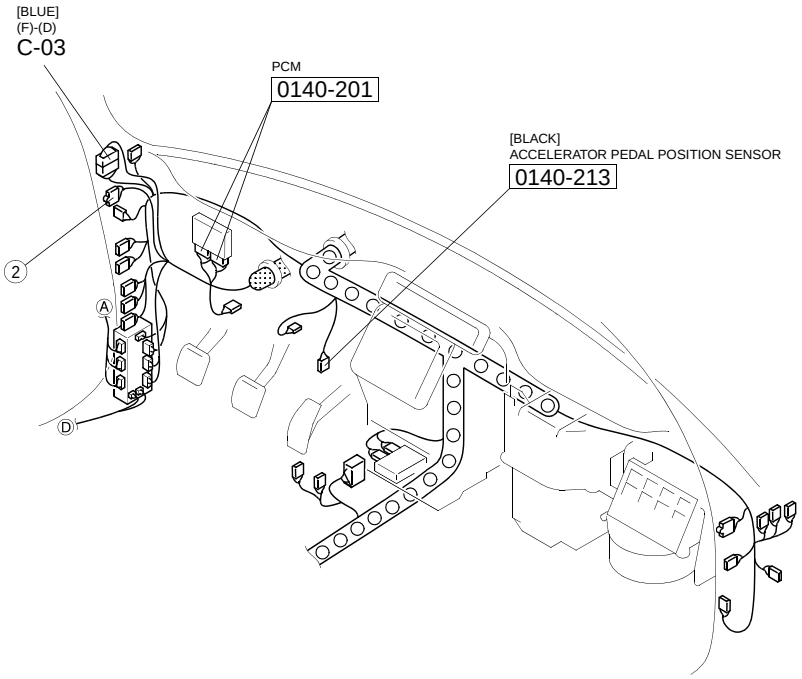

91
https://www.MyCarManual.com

< > NOT USED
✳ : VACANT

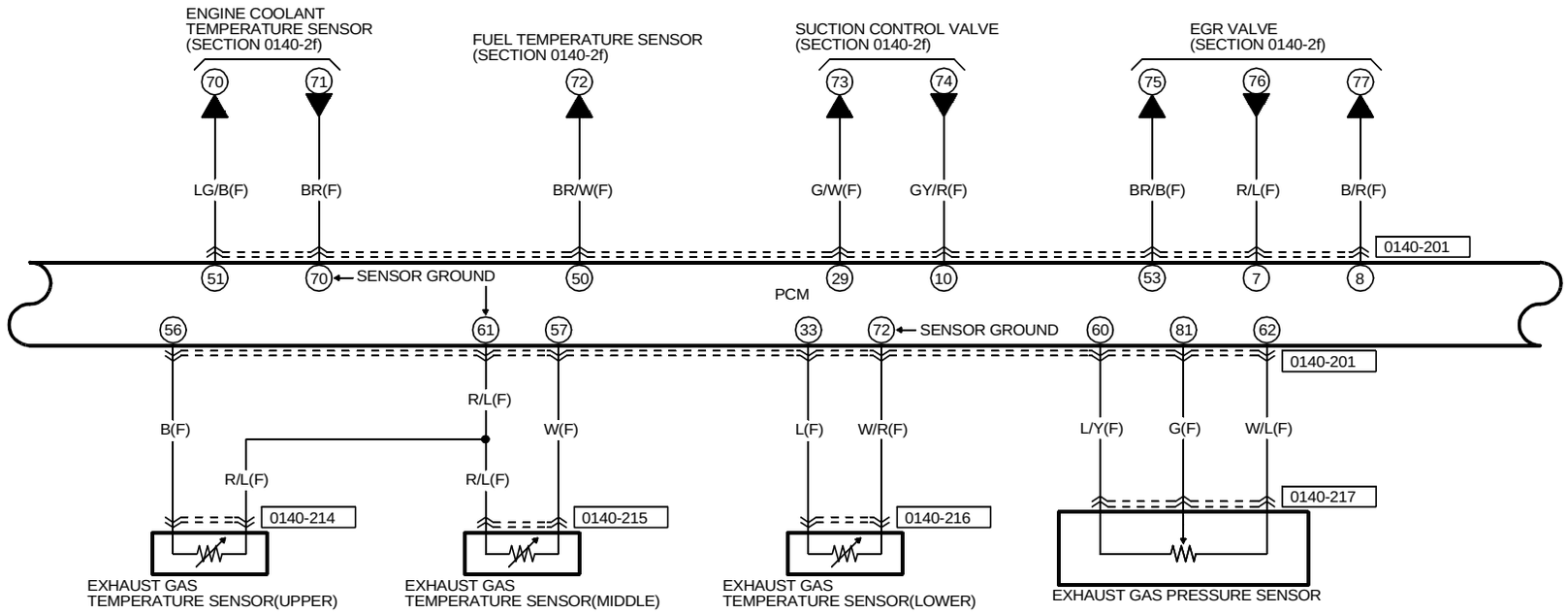

0140-201
PCM(F)

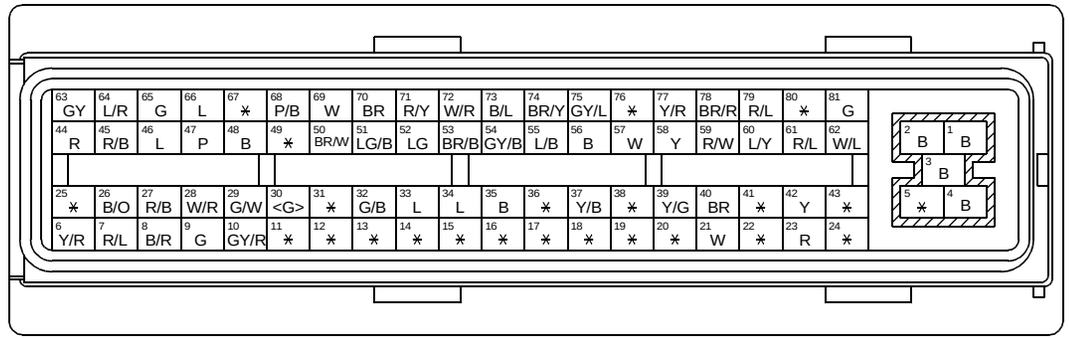

0140-214
EXHAUST GAS TEMPERATURE SENSOR(UPPER)(F)

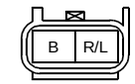

0140-215
EXHAUST GAS TEMPERATURE SENSOR(MIDDLE)(F)

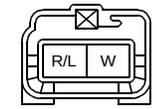

0140-216
EXHAUST GAS TEMPERATURE SENSOR(LOWER)(F)

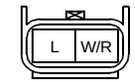

0140-217
EXHAUST GAS PRESSURE SENSOR(F)

HARNESS SYMBOL : (F) (E) (D) (R)

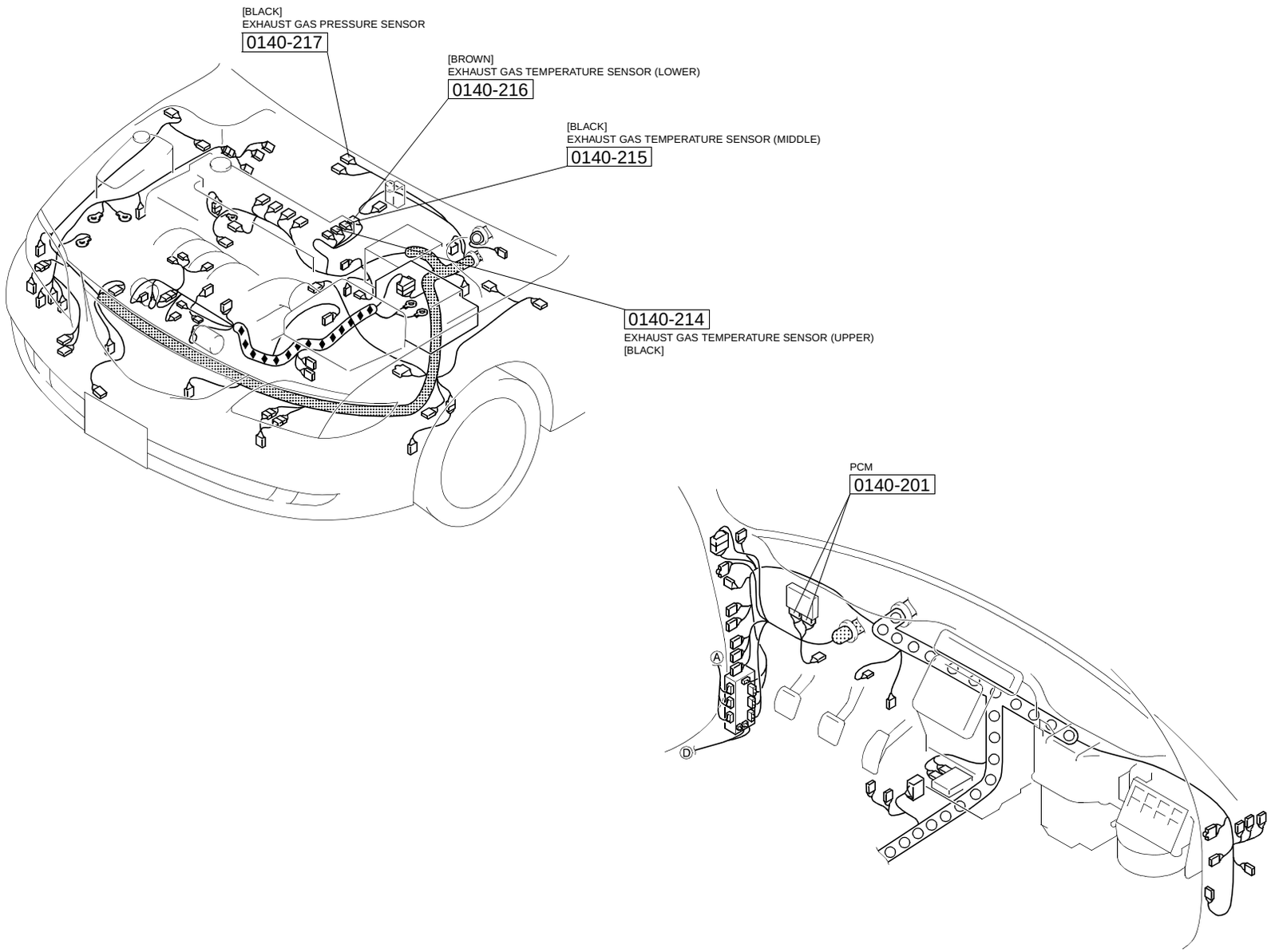

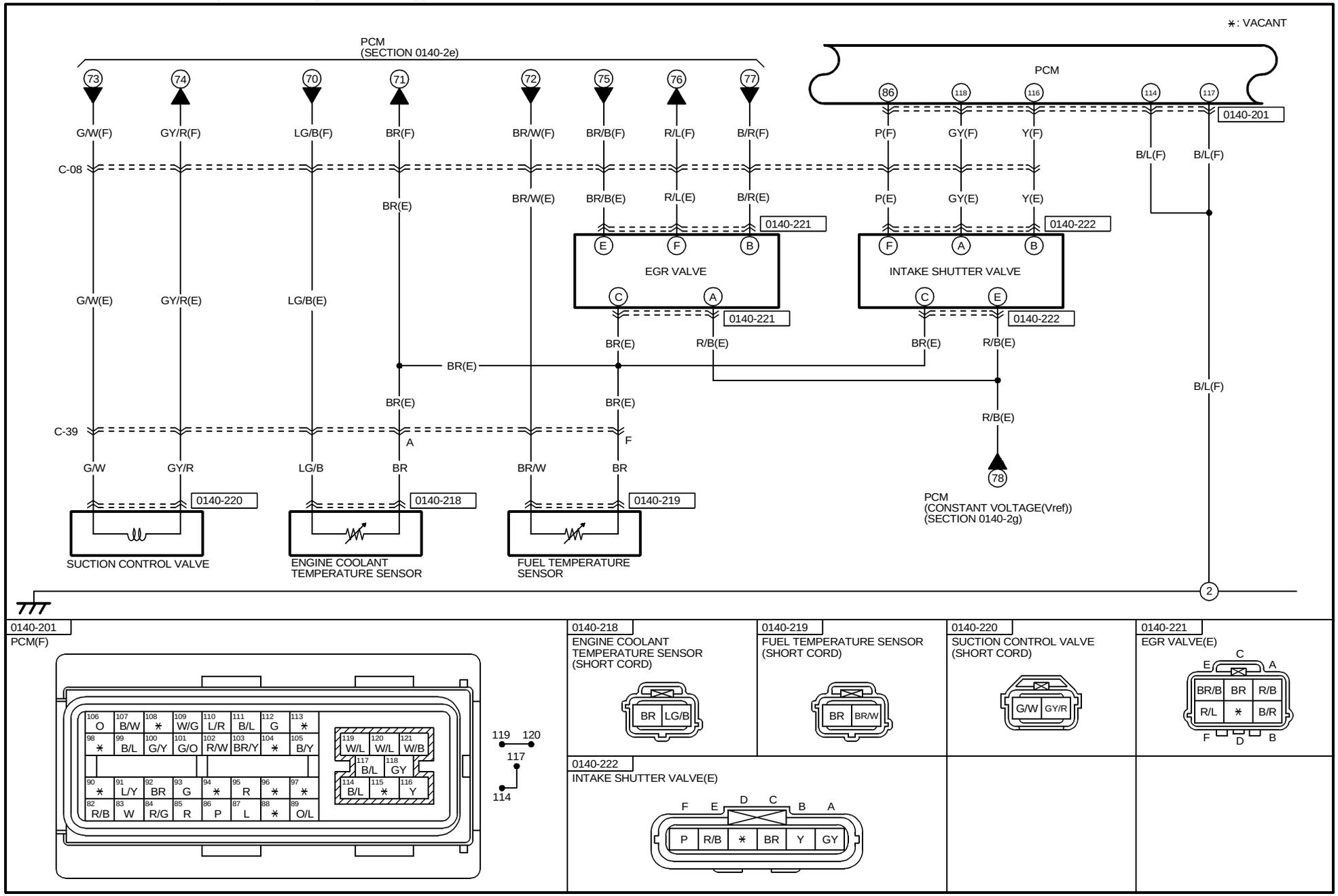

0140-201
PCM(F)

0140-218
ENGINE COOLANT
TEMPERATURE SENSOR
(SHORT CORD)

0140-219
FUEL TEMPERATURE SENSOR
(SHORT CORD)

0140-220
SUCTION CONTROL VALVE
(SHORT CORD)

0140-221
EGR VALVE(E)

0140-222
INTAKE SHUTTER VALVE(E)

HARNESS SYMBOL : (F) (E) (D) (R)

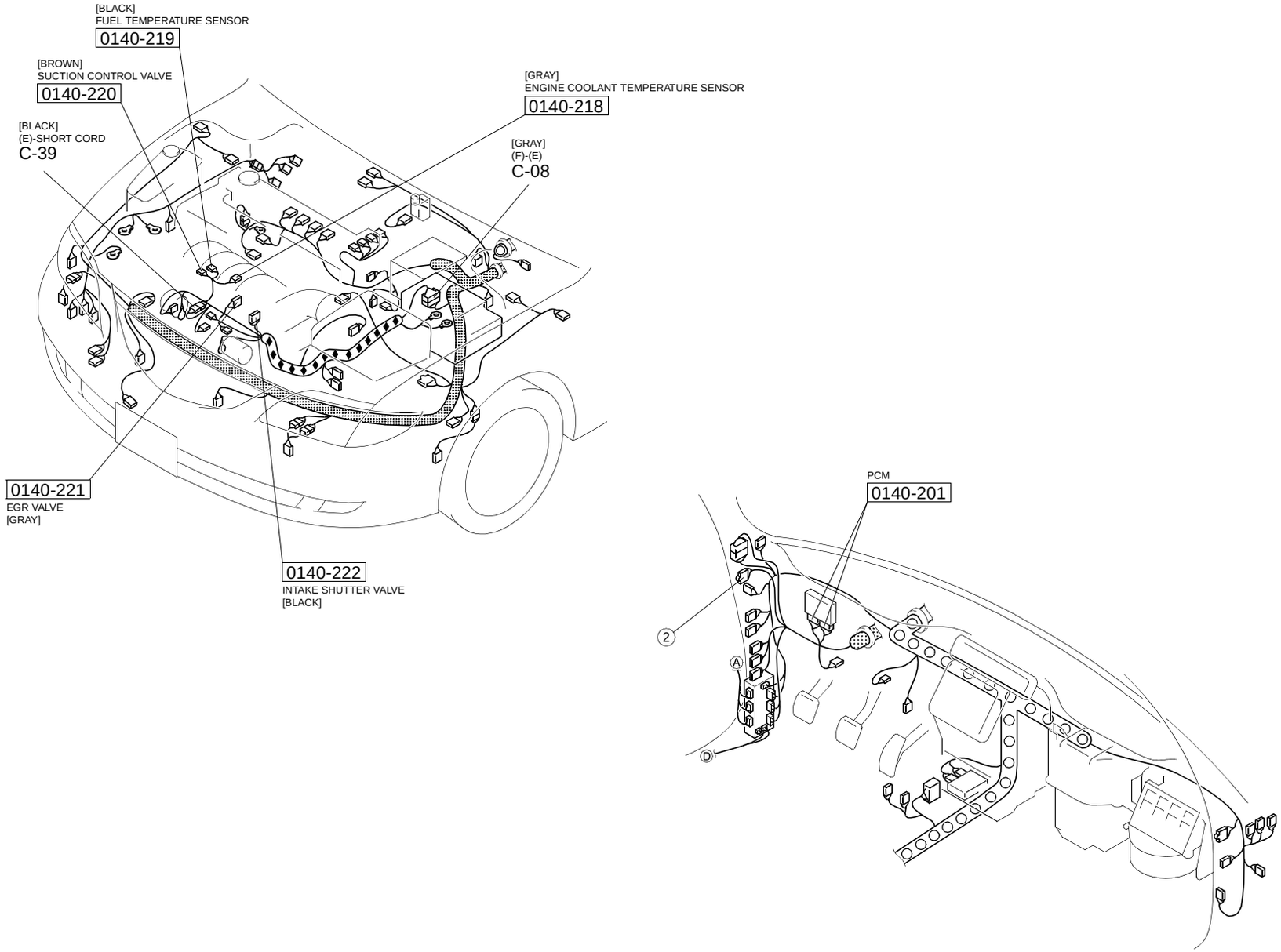

< > NOT USED
∗: VACANT

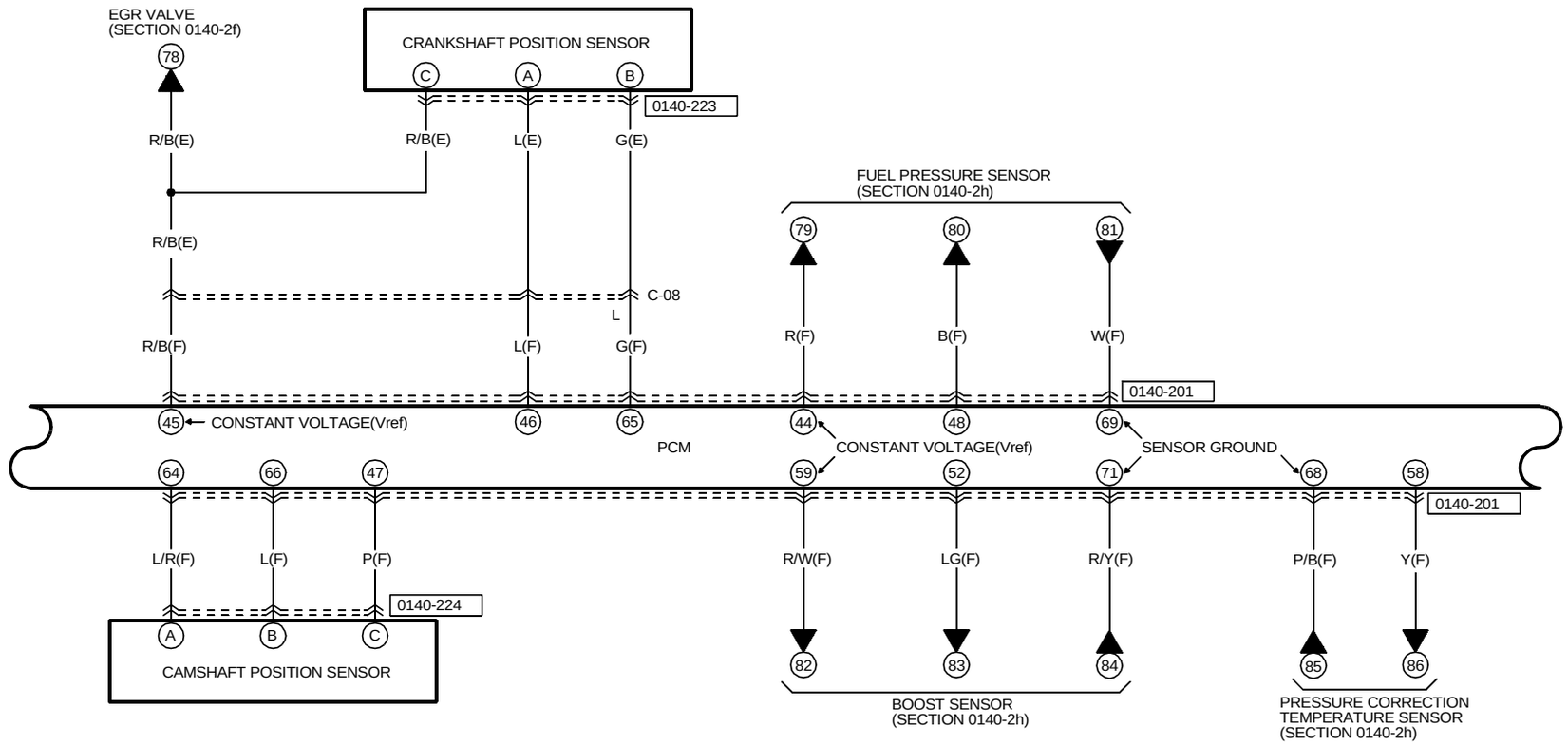

0140-201
PCM(F)

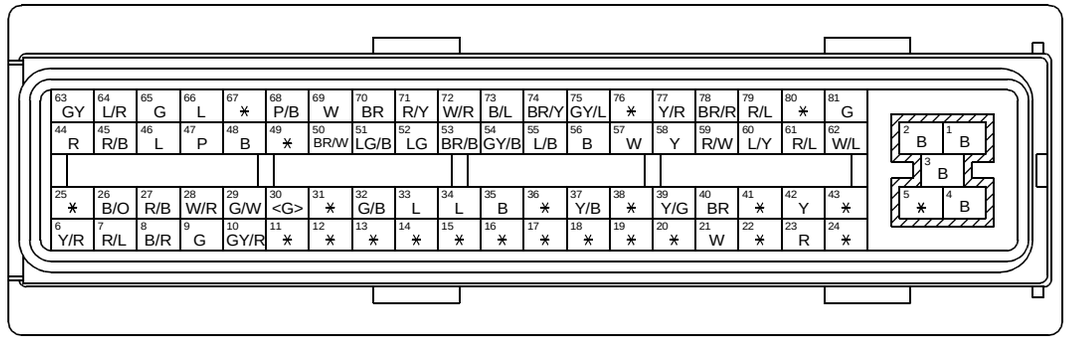

0140-223
CRANKSHAFT POSITION SENSOR(E)

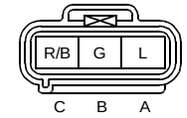

0140-224
CAMSHAFT POSITION SENSOR (F)

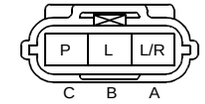

HARNESS SYMBOL : (F) (E) (D) (R)

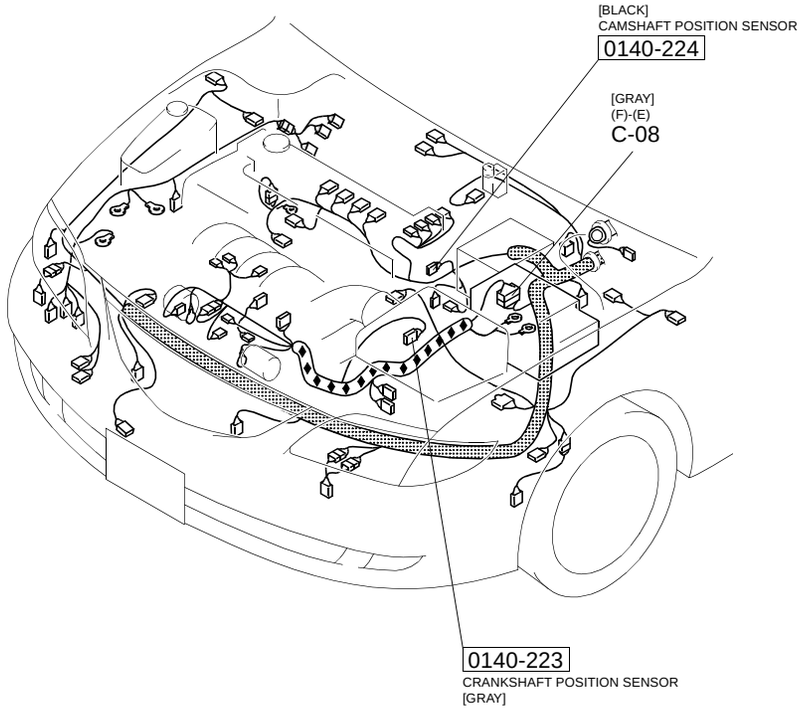

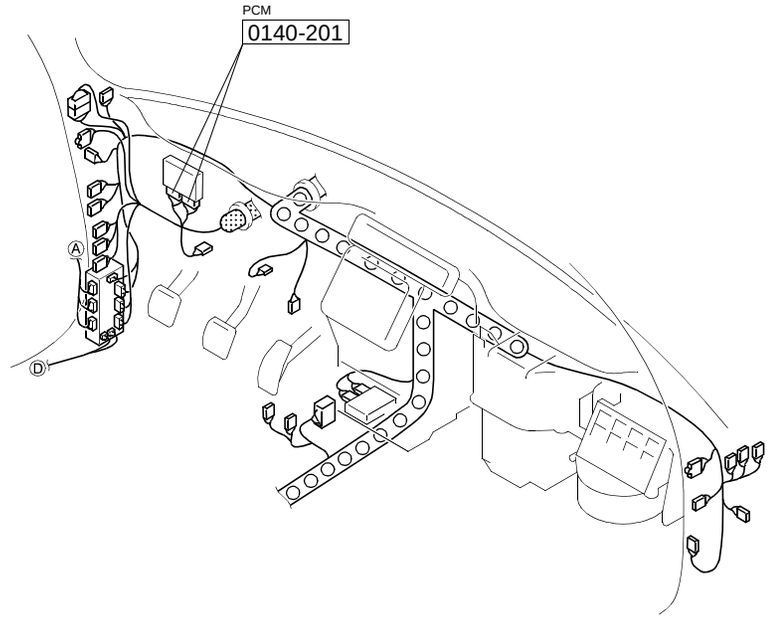

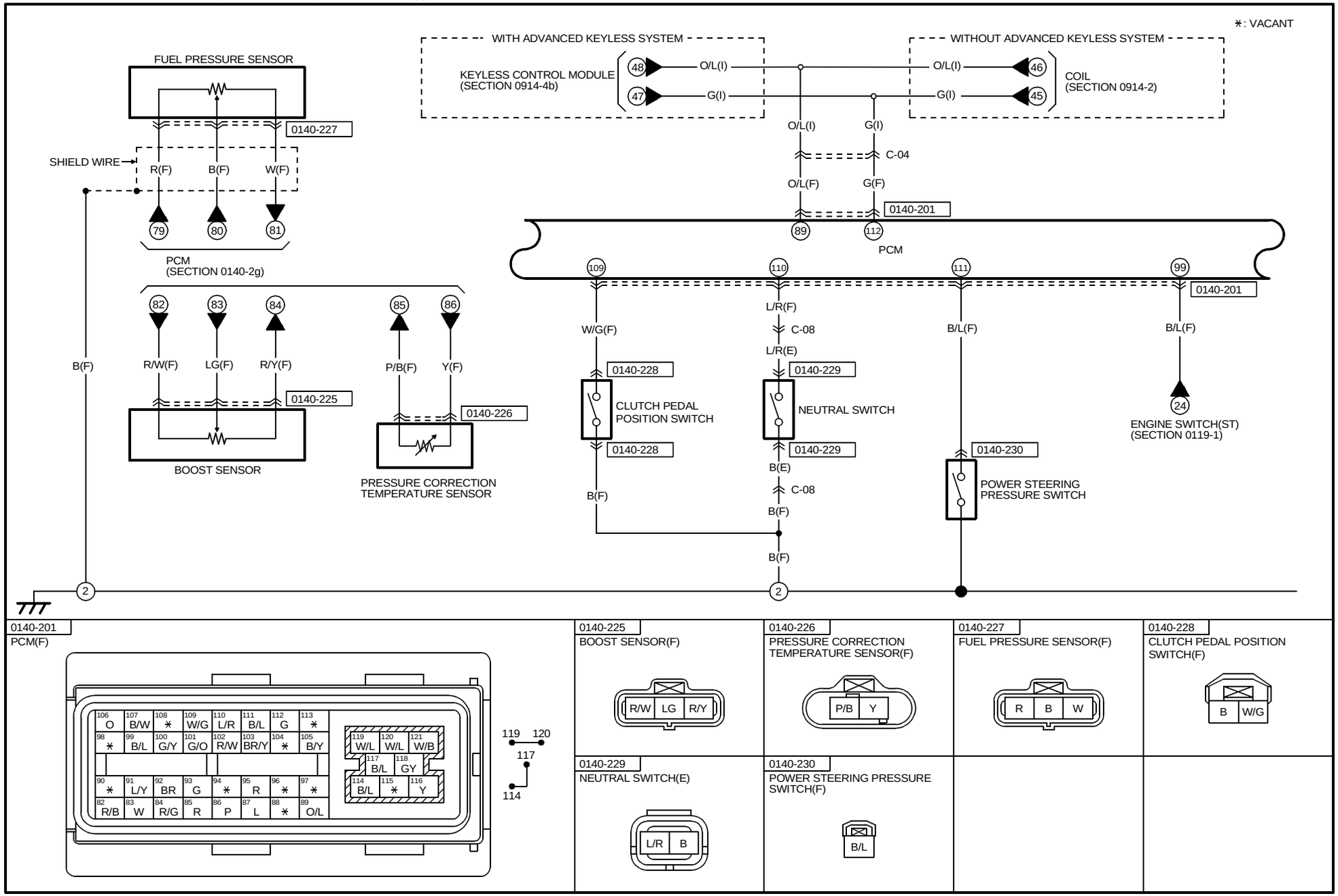

0140-201
PCM(F)

0140-225
BOOST SENSOR(F)

0140-226
PRESSURE CORRECTION TEMPERATURE SENSOR(F)

0140-227
FUEL PRESSURE SENSOR(F)

0140-228
CLUTCH PEDAL POSITION SWITCH(F)

0140-229
NEUTRAL SWITCH(E)

0140-230
POWER STEERING PRESSURE SWITCH(F)

HARNESS SYMBOL : (F) (E) (D) (R)

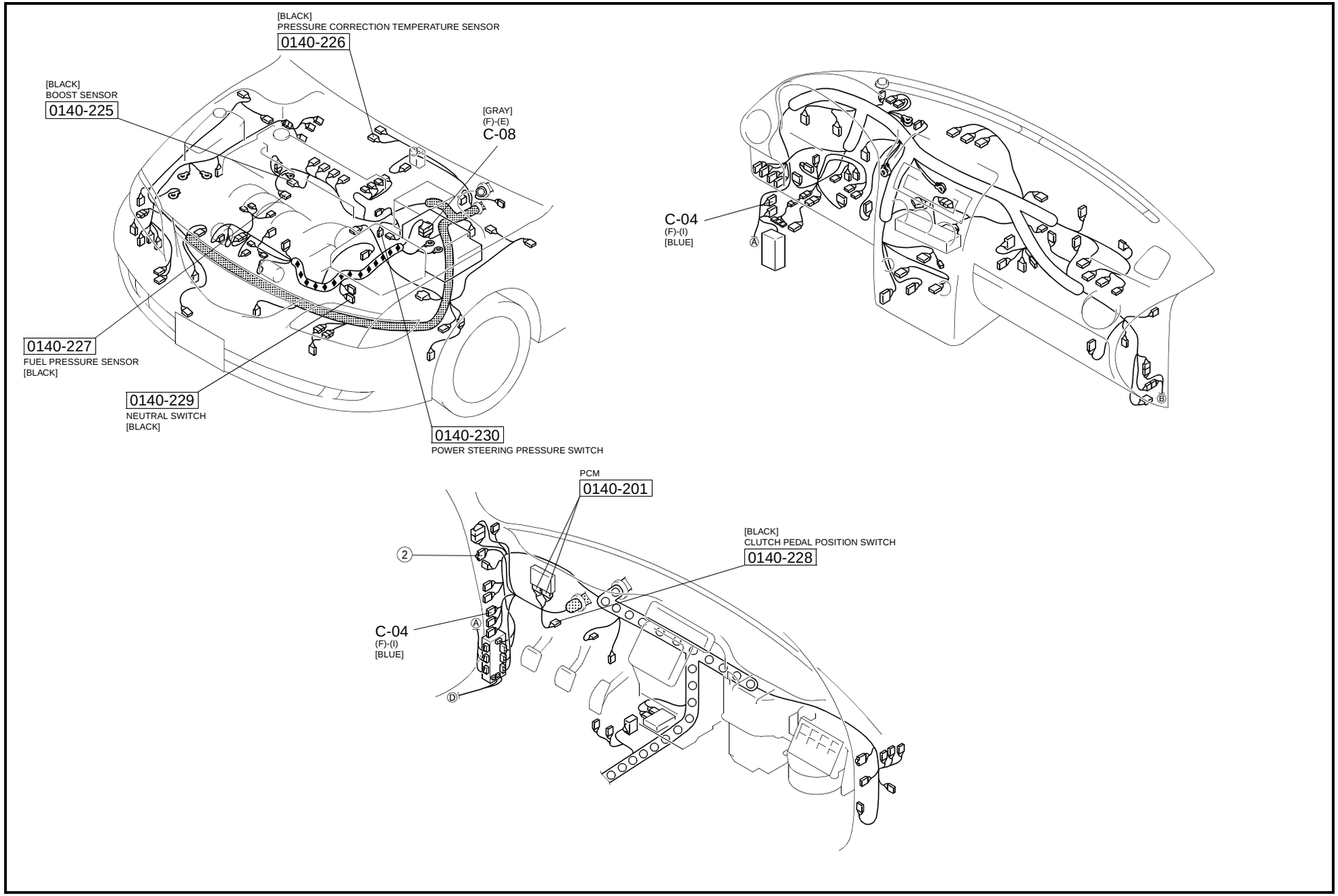

@: WITH HEADLIGHT MANUAL LEVELING SYSTEM
∗: VACANT

ABS HU/CM ← WITHOUT DSC
(SECTION 0413)
DSC HU/CM ← WITH DSC
(SECTION 0415-b)

INSTRUMENT CLUSTER
(SECTION 0922-1b)

DATA LINK CONNECTOR2
(SECTION 00D)

WITH ADVANCED KEYLESS SYSTEM
KEYLESS CONTROL MODULE
(SECTION 0914-4b)

B A R(I) L(I) R(I) L(I) R(I) L(I)

P(F) V(F) R(I) L(I) R(I) L(I)

BCM 0940-01
9G 9C 4L 4J

CAN_H → 9E 9A ← CAN_L
0940-01

R(F) L(F)

R(F) L(F) R(F) L(F)

B A

WATER HEATER UNIT
(SECTION 0740-4)

WITH WATER HEATER SYSTEM

0140-201
CAN_H → 95 87 ← CAN_L
PCM

0140-201
PCM(F)

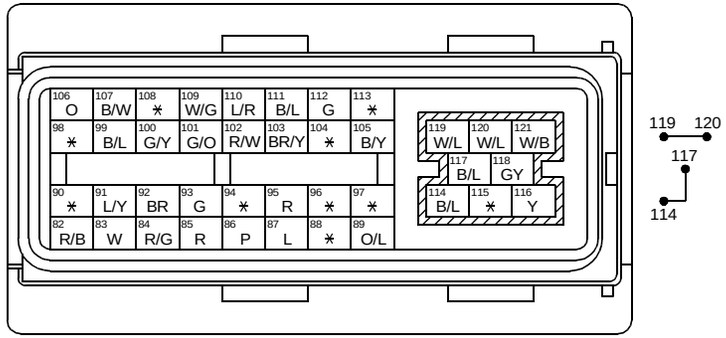

0940-01
BCM

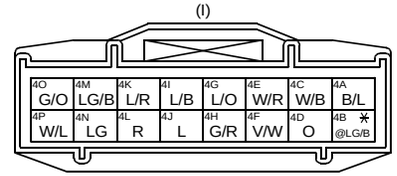

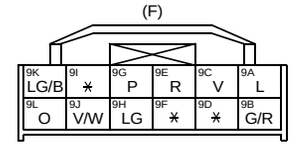

HARNESS SYMBOL : (F) (E) (D) (R)

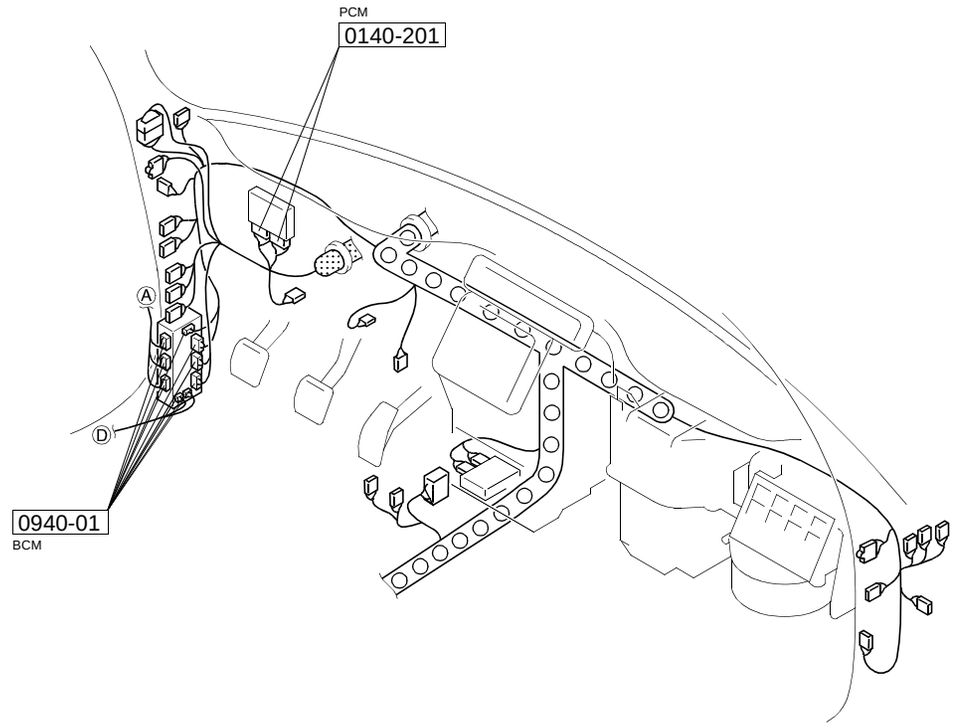

CONTROL SYSTEM (L3 Turbo)

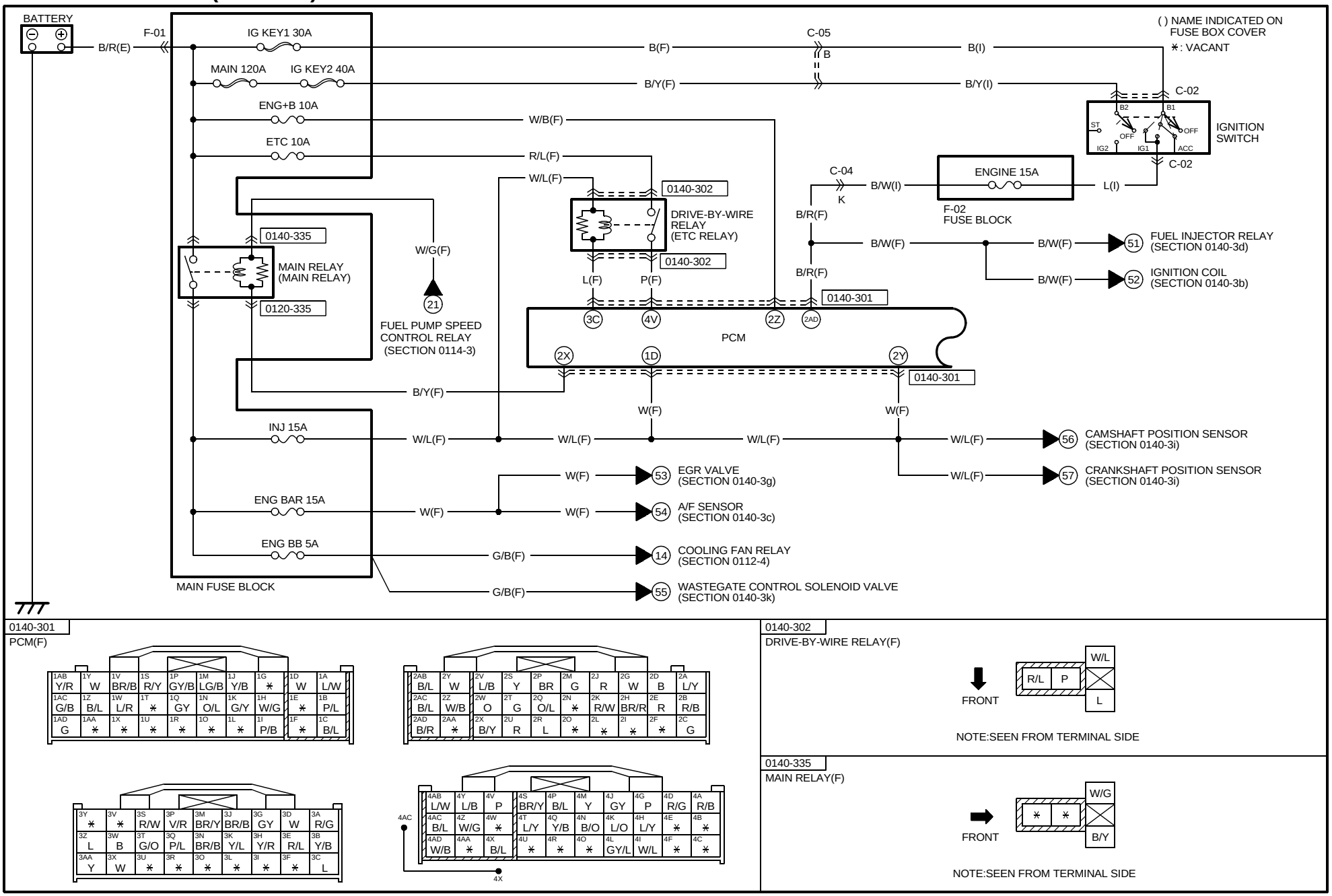

0140-301
PCM(F)

0140-302
DRIVE-BY-WIRE RELAY(F)

NOTE:SEEN FROM TERMINAL SIDE

0140-335
MAIN RELAY(F)

NOTE:SEEN FROM TERMINAL SIDE

https://www.MyCarManual.com

HARNESS SYMBOL : (F) (E) (D) (R)

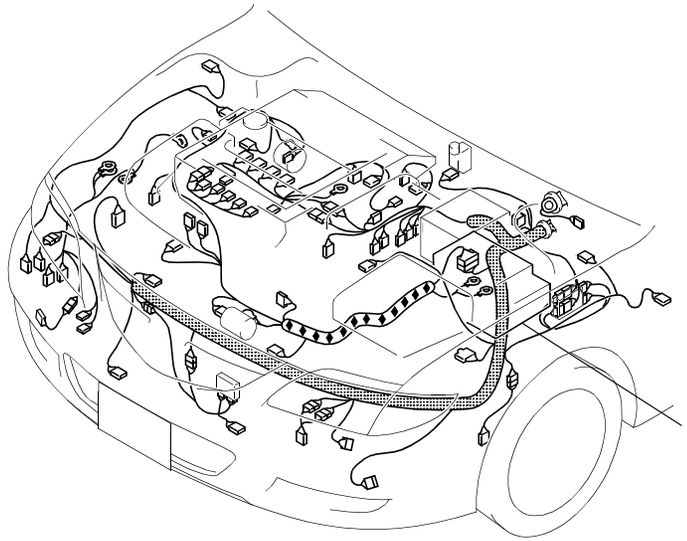

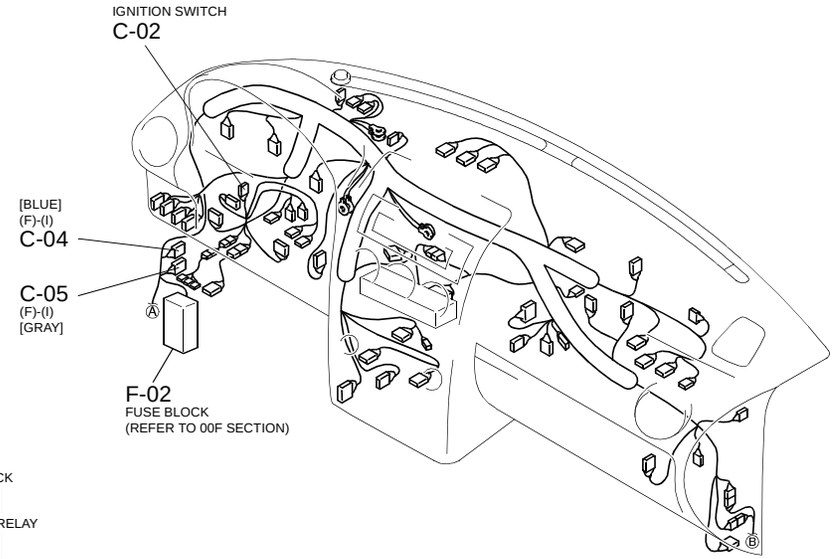

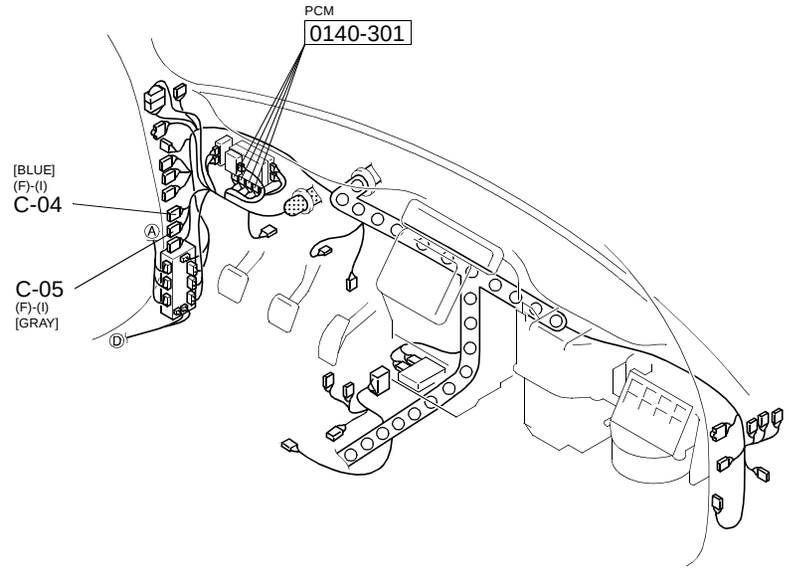

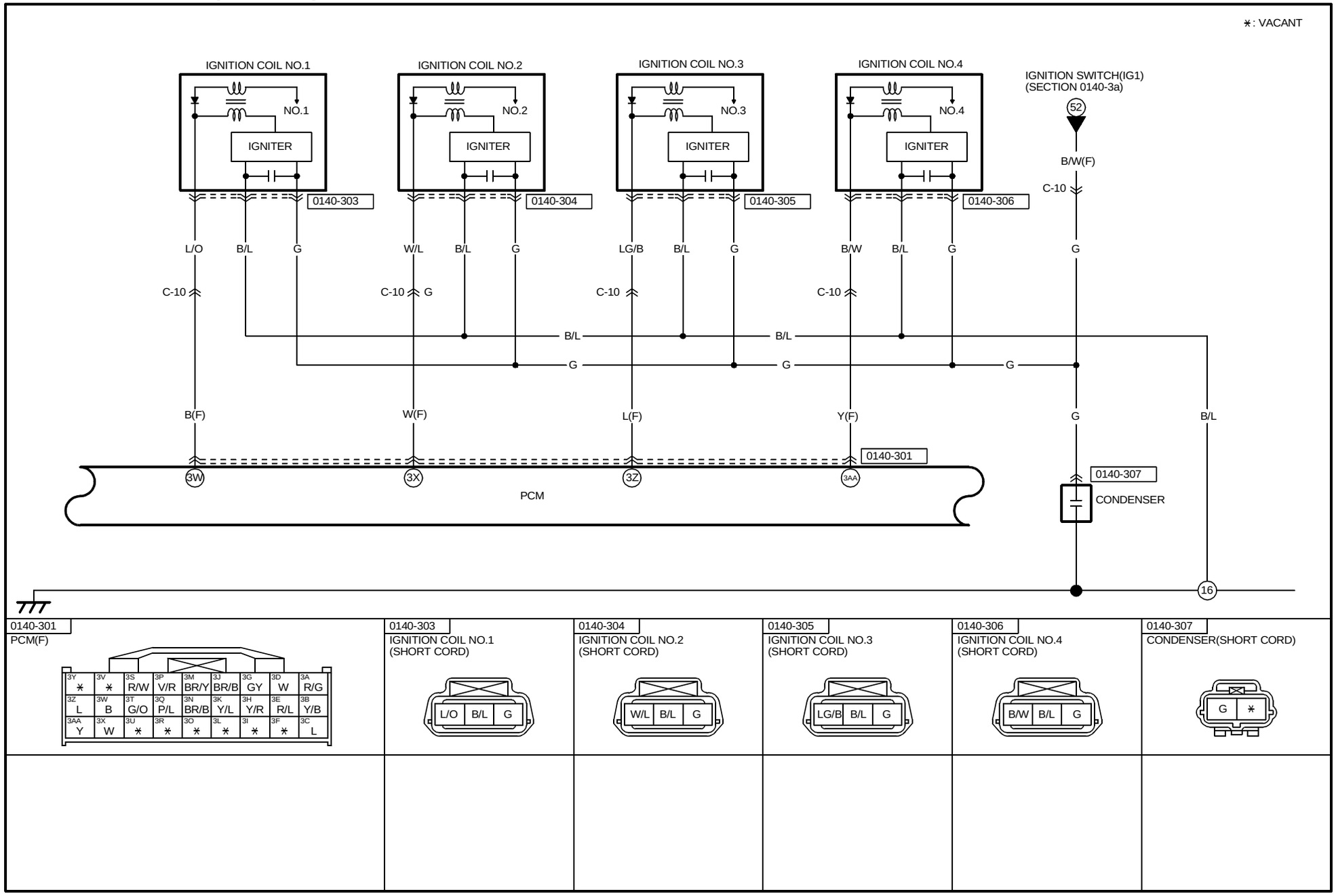

0140-301 PCM(F)	0140-303 IGNITION COIL NO.1 (SHORT CORD)	0140-304 IGNITION COIL NO.2 (SHORT CORD)	0140-305 IGNITION COIL NO.3 (SHORT CORD)	0140-306 IGNITION COIL NO.4 (SHORT CORD)	0140-307 CONDENSER(SHORT CORD)
3Y ∗, 3V ∗, 3S R/W, 3P V/R, 3M BR/Y, 3J BR/B, 3G GY, 3D W, 3A R/G	L/O, B/L, G	W/L, B/L, G	LG/B, B/L, G	B/W, B/L, G	G, ∗
3Z L, 3W B, 3T G/O, 3Q P/L, 3N BR/B, 3K Y/L, 3H Y/R, 3E R/L, 3B Y/B					
3AA Y, 3X W, 3U ∗, 3R ∗, 3O ∗, 3L ∗, 3I ∗, 3F ∗, 3C L					

HARNESS SYMBOL : (F) (E) (D) (R)

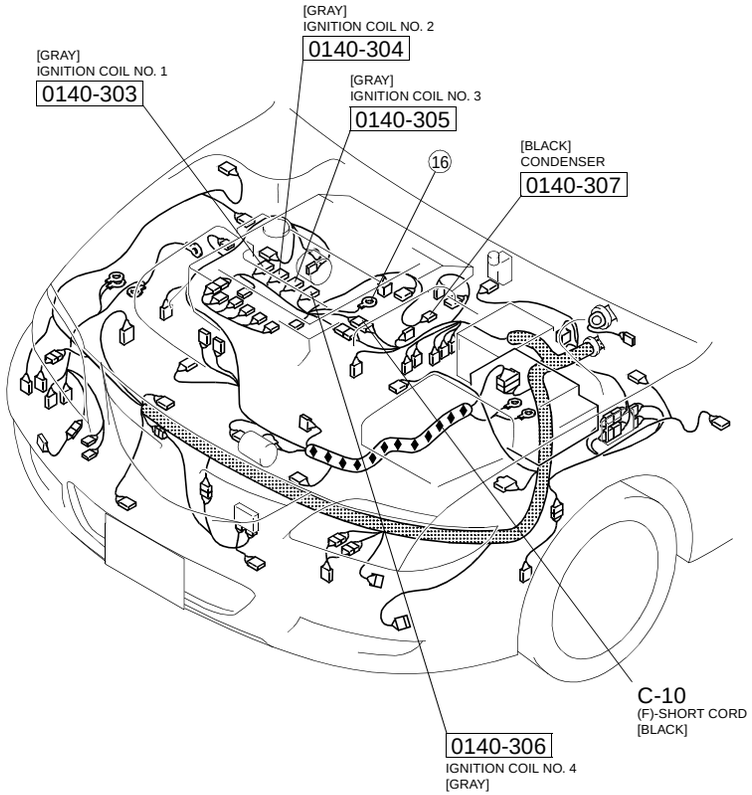

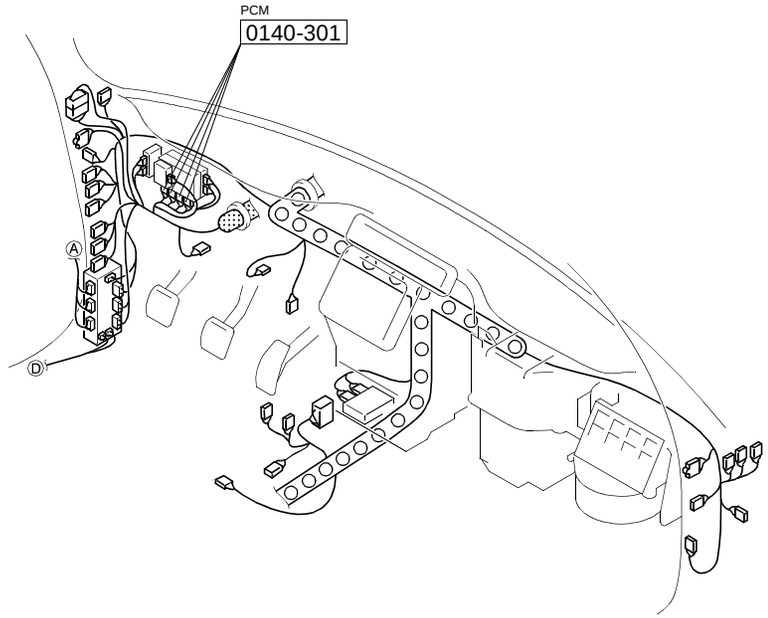

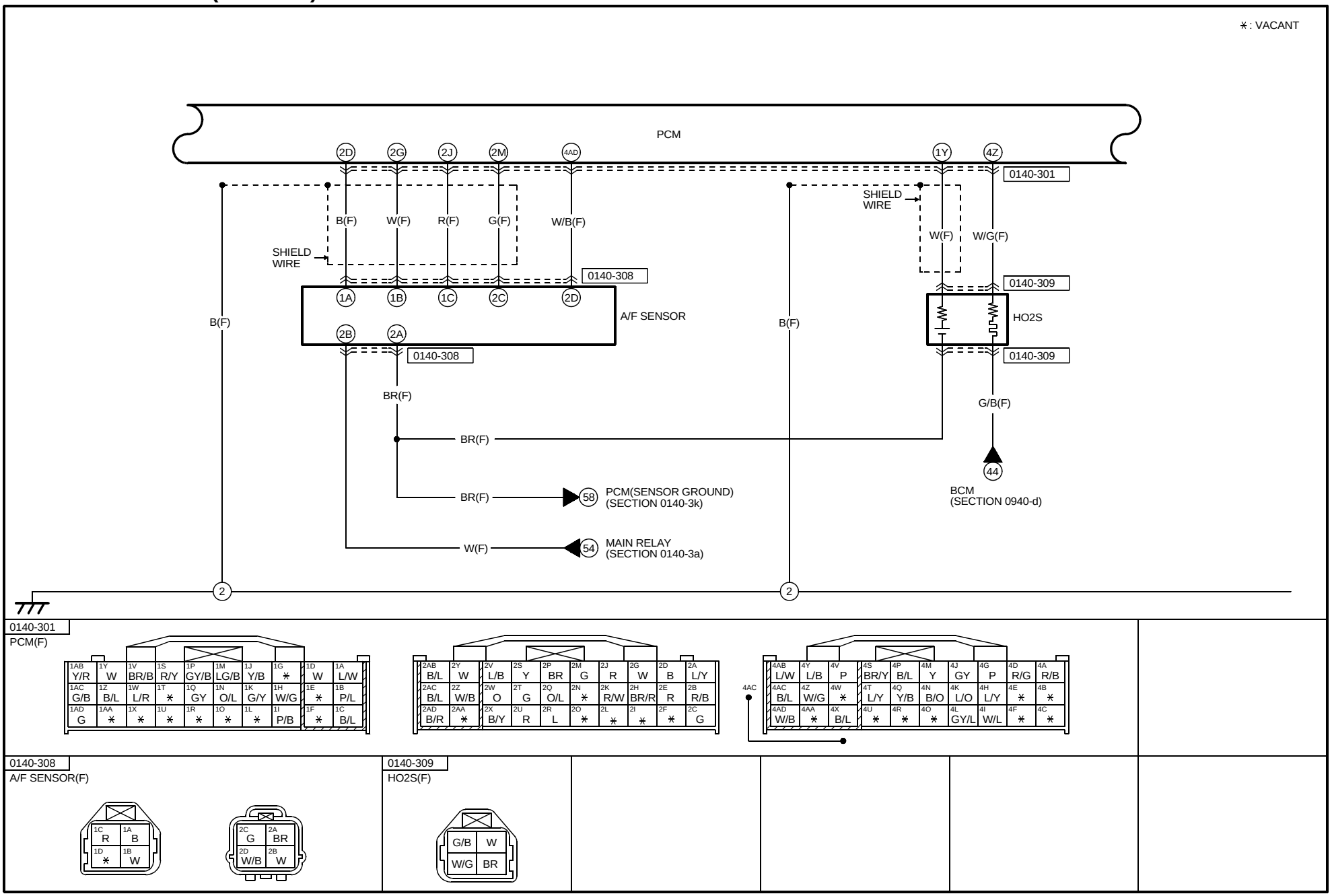

https://www.MyCarManual.com

HARNESS SYMBOL : (F) (E) (D) (R)

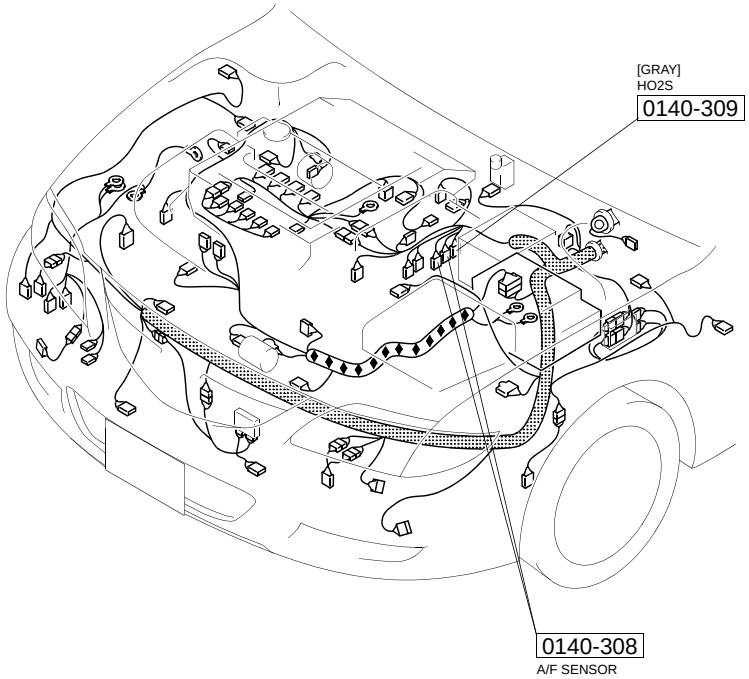

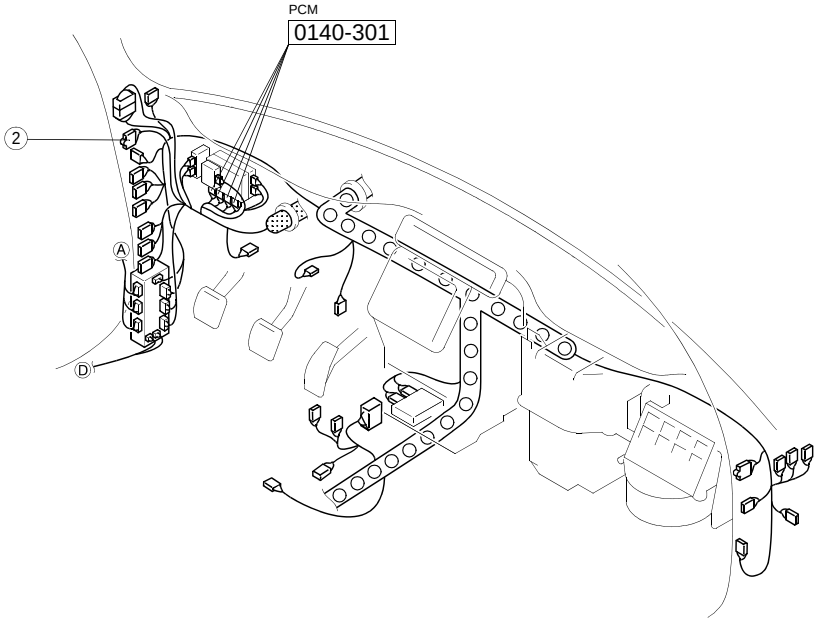

https://www.MyCarManual.com

CONTROL SYSTEM (L3 Turbo)

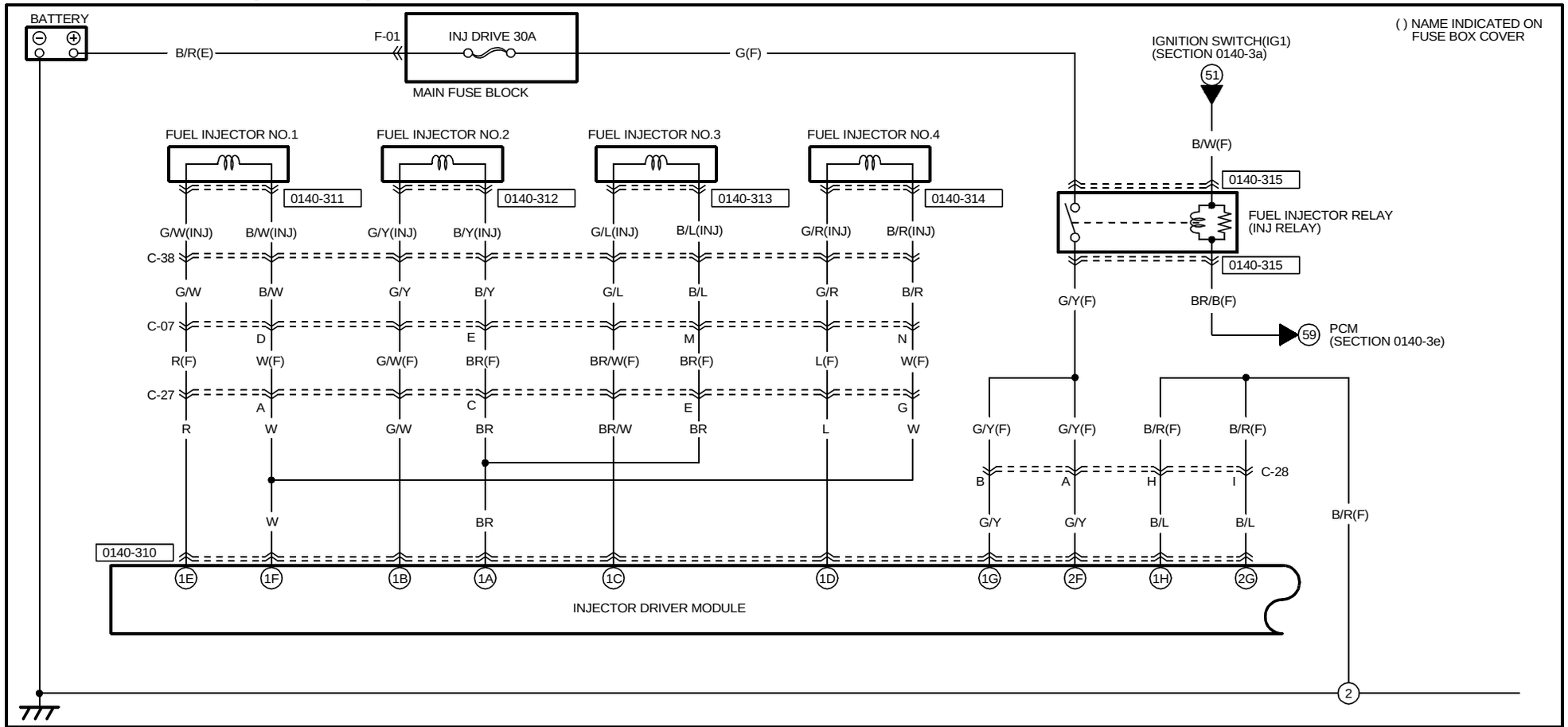

0140-310
INJECTOR DRIVER MODULE(SHORT CORD)

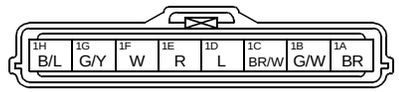

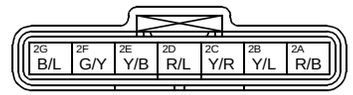

0140-311
FUEL INJECTOR NO.1(INJ)

0140-312
FUEL INJECTOR NO.2(INJ)

0140-313
FUEL INJECTOR NO.3(INJ)

0140-314
FUEL INJECTOR NO.4(INJ)

0140-315
FUEL INJECTOR RELAY(F)

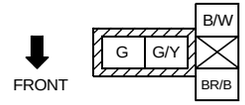

NOTE:SEEN FROM TERMINAL SIDE

HARNESS SYMBOL : (F) (E) (D) (R)

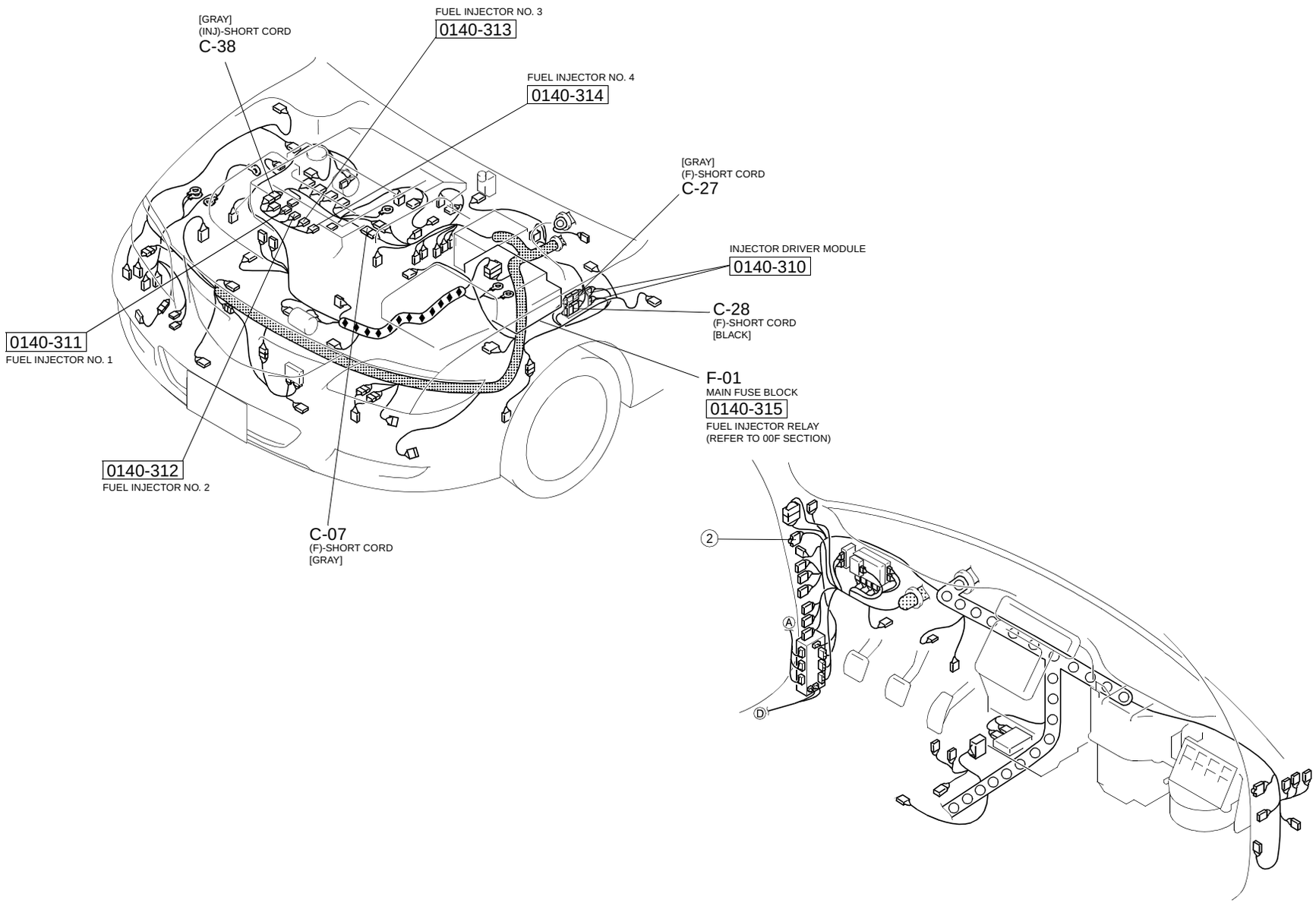

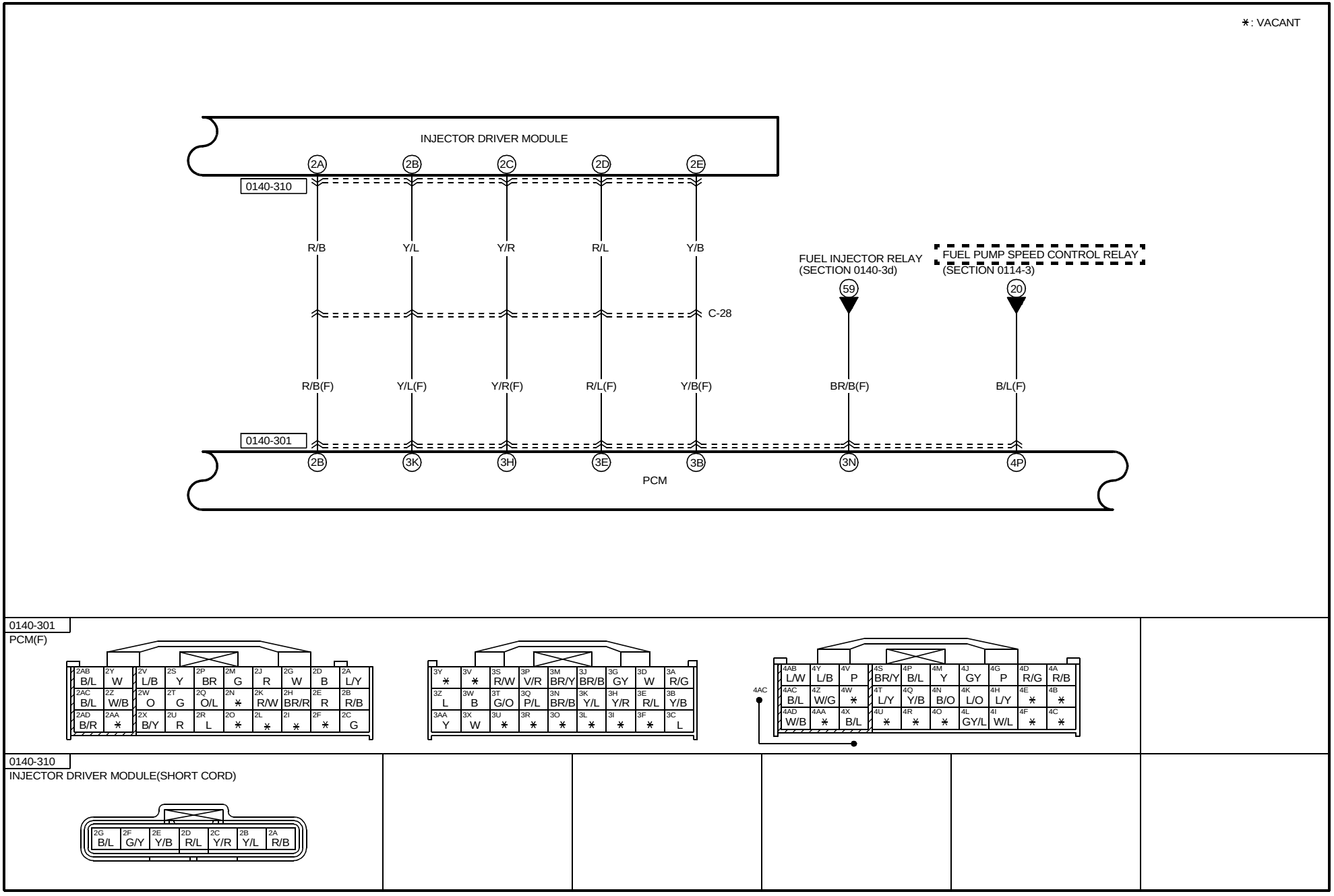

https://www.MyCarManual.com

HARNESS SYMBOL : (F) (E) (D) (R)

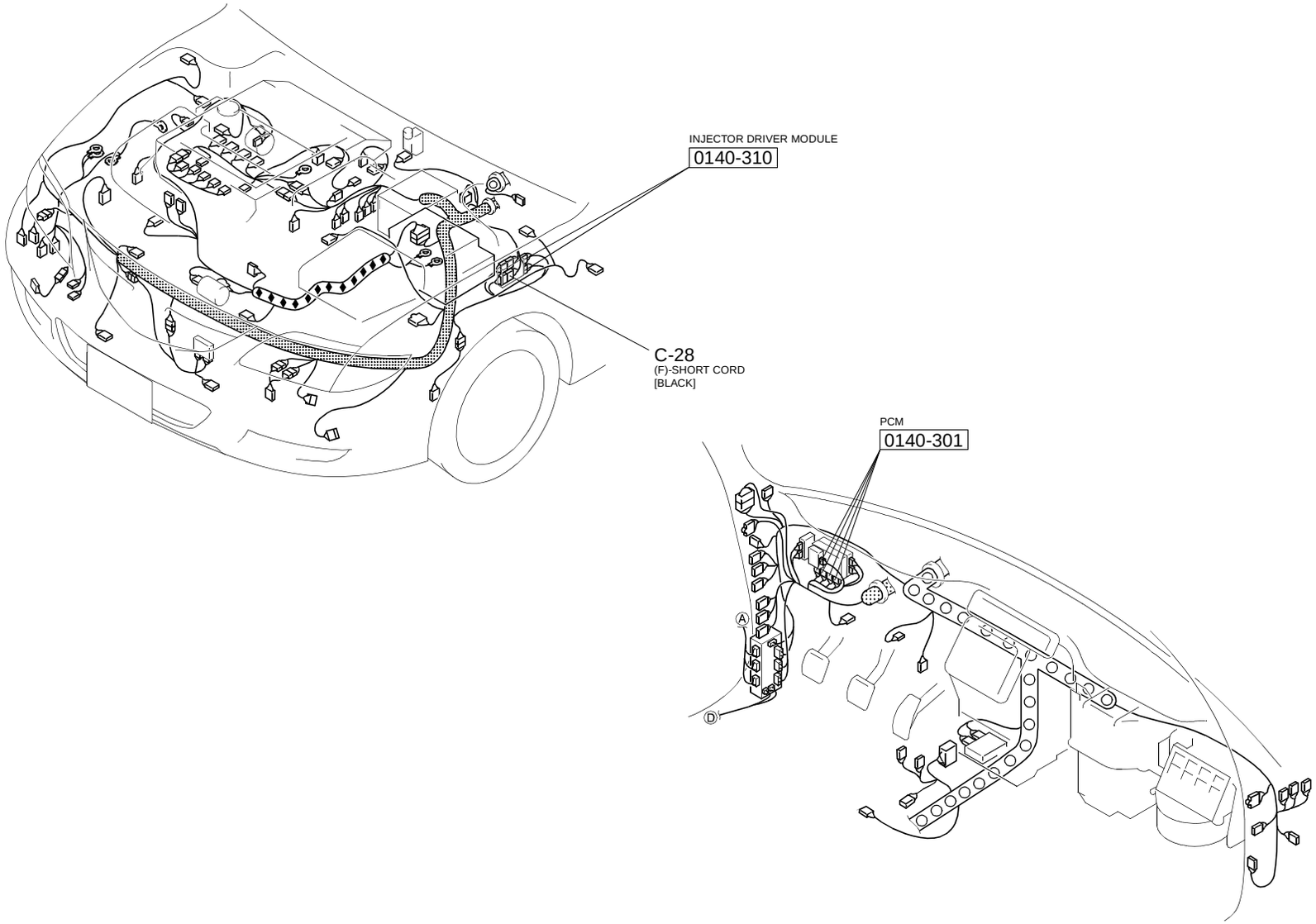

111

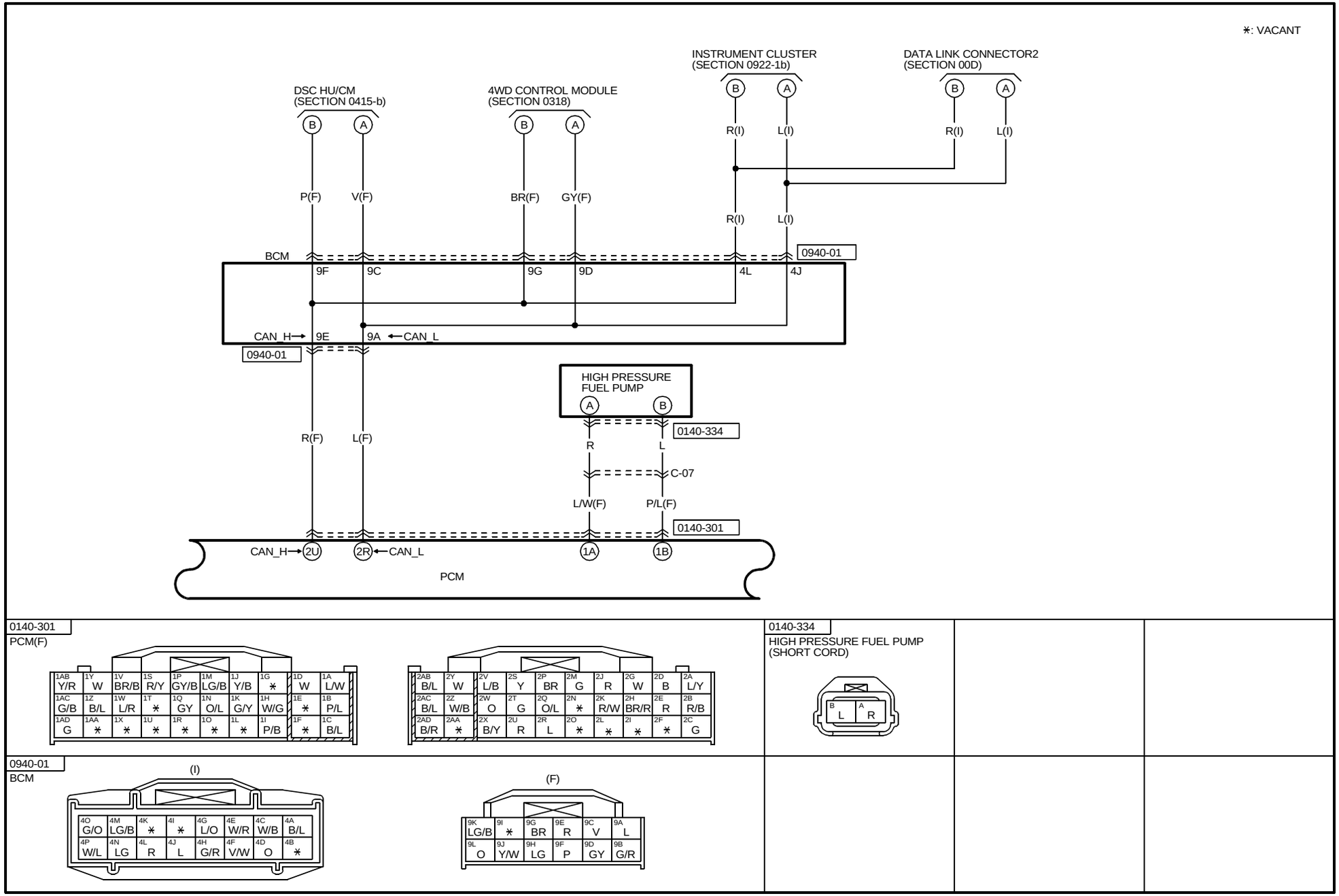
*: VACANT
INSTRUMENT CLUSTER
(SECTION 0922-1b)
DATA LINK CONNECTOR2
(SECTION 00D)
DSC HU/CM
(SECTION 0415-b)
4WD CONTROL MODULE
(SECTION 0318)
B
A
R(I)
L(I)
P(F)
V(F)
BR(F)
GY(F)
BCM
0940-01
9F
9C
9G
9D
4L
4J
CAN_H
9E
9A
CAN_L
HIGH PRESSURE
FUEL PUMP
0140-334
R
L
C-07
R(F)
L(F)
L/W(F)
P/L(F)
0140-301
2U
2R
1A
1B
PCM
0140-301
PCM(F)
0140-334
HIGH PRESSURE FUEL PUMP
(SHORT CORD)
0940-01
BCM
(I)
(F)

HARNESS SYMBOL : (F) (E) (D) (R)

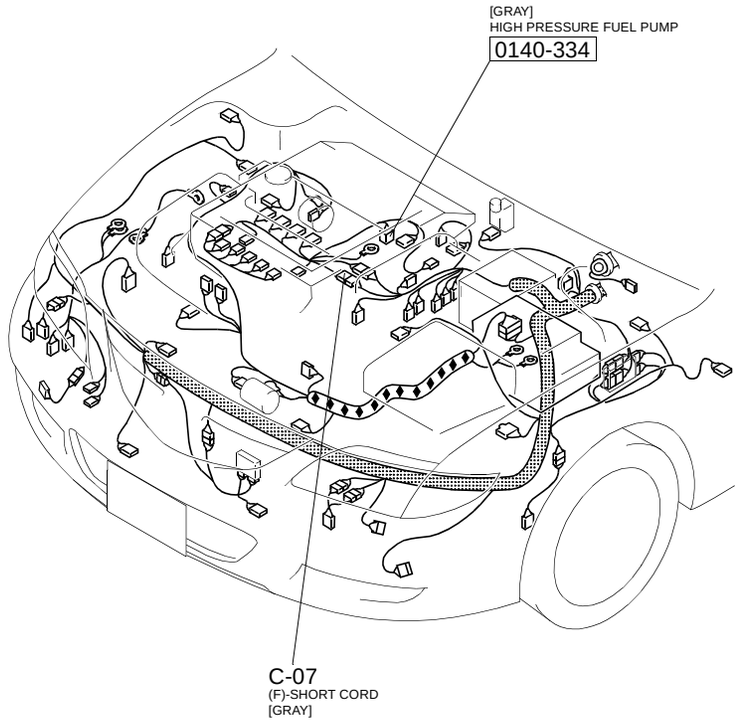

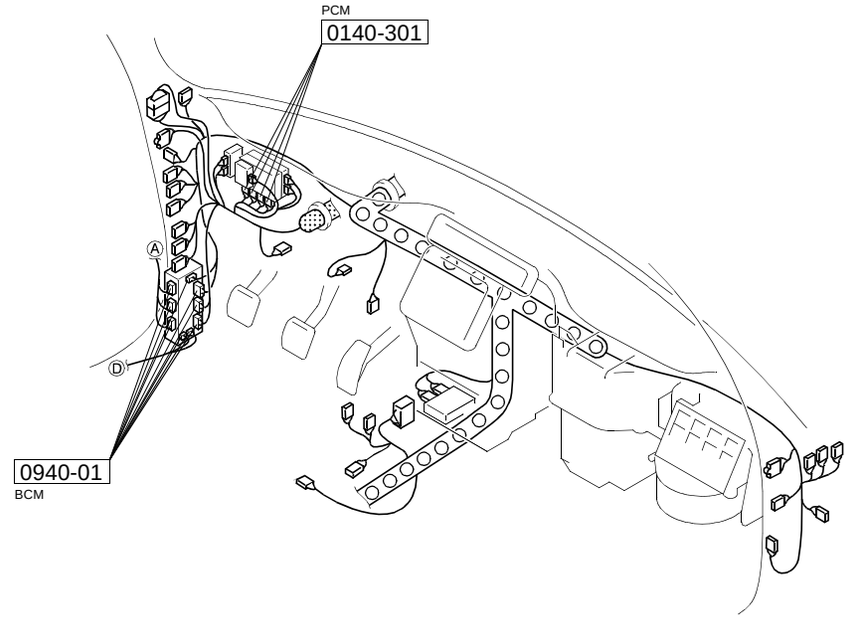

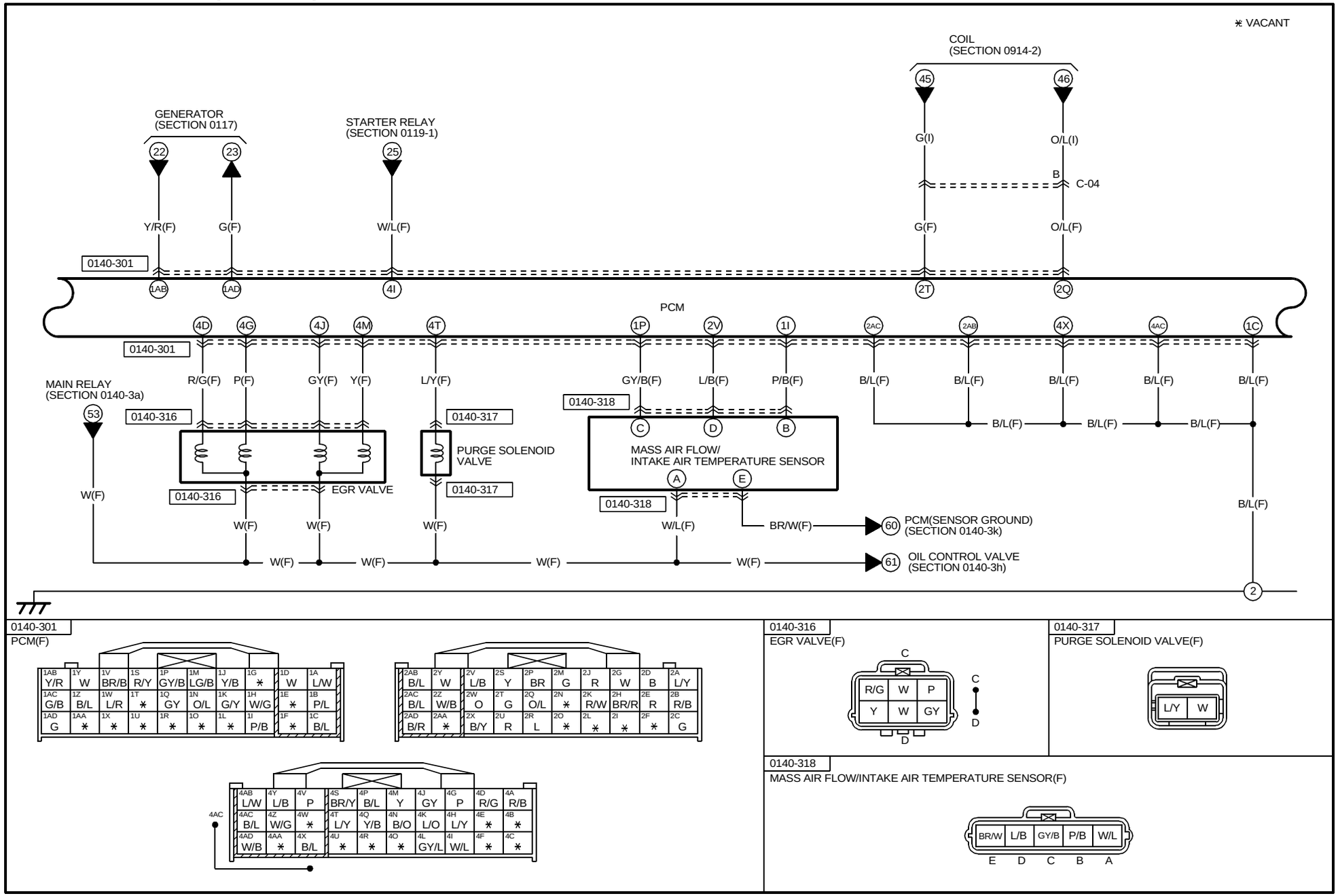
* VACANT
COIL
(SECTION 0914-2)
45
46
G(I)
O/L(I)
B
C-04
GENERATOR
(SECTION 0117)
22
23
STARTER RELAY
(SECTION 0119-1)
25
Y/R(F)
G(F)
W/L(F)
G(F)
O/L(F)
0140-301
1AB
1AD
4I
2T
2Q
PCM
4D
4G
4J
4M
4T
1P
2V
1I
2AC
2AB
4X
4AC
1C
0140-301
MAIN RELAY
(SECTION 0140-3a)
53
R/G(F)
P(F)
GY(F)
Y(F)
L/Y(F)
GY/B(F)
L/B(F)
P/B(F)
B/L(F)
0140-316
0140-317
0140-318
PURGE SOLENOID
VALVE
MASS AIR FLOW/
INTAKE AIR TEMPERATURE SENSOR
C
D
B
A
E
EGR VALVE
W(F)
BR/W(F)
W/L(F)
60
PCM(SENSOR GROUND)
(SECTION 0140-3k)
61
OIL CONTROL VALVE
(SECTION 0140-3h)
2
0140-301
PCM(F)
0140-316
EGR VALVE(F)
0140-317
PURGE SOLENOID VALVE(F)
0140-318
MASS AIR FLOW/INTAKE AIR TEMPERATURE SENSOR(F)
BR/W
L/B
GY/B
P/B
W/L
E
D
C
B
A

HARNESS SYMBOL : (F) (E) (D) (R)

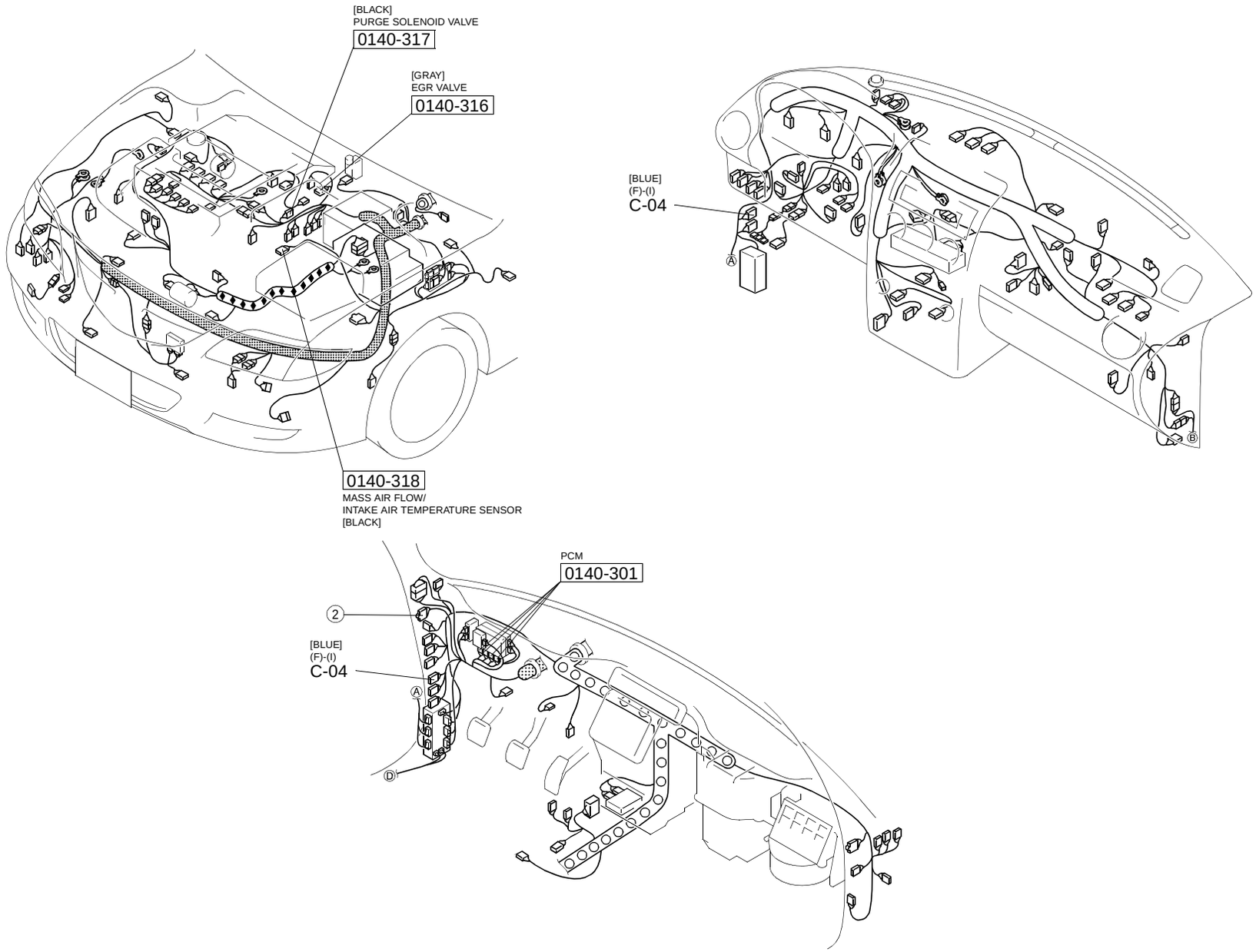

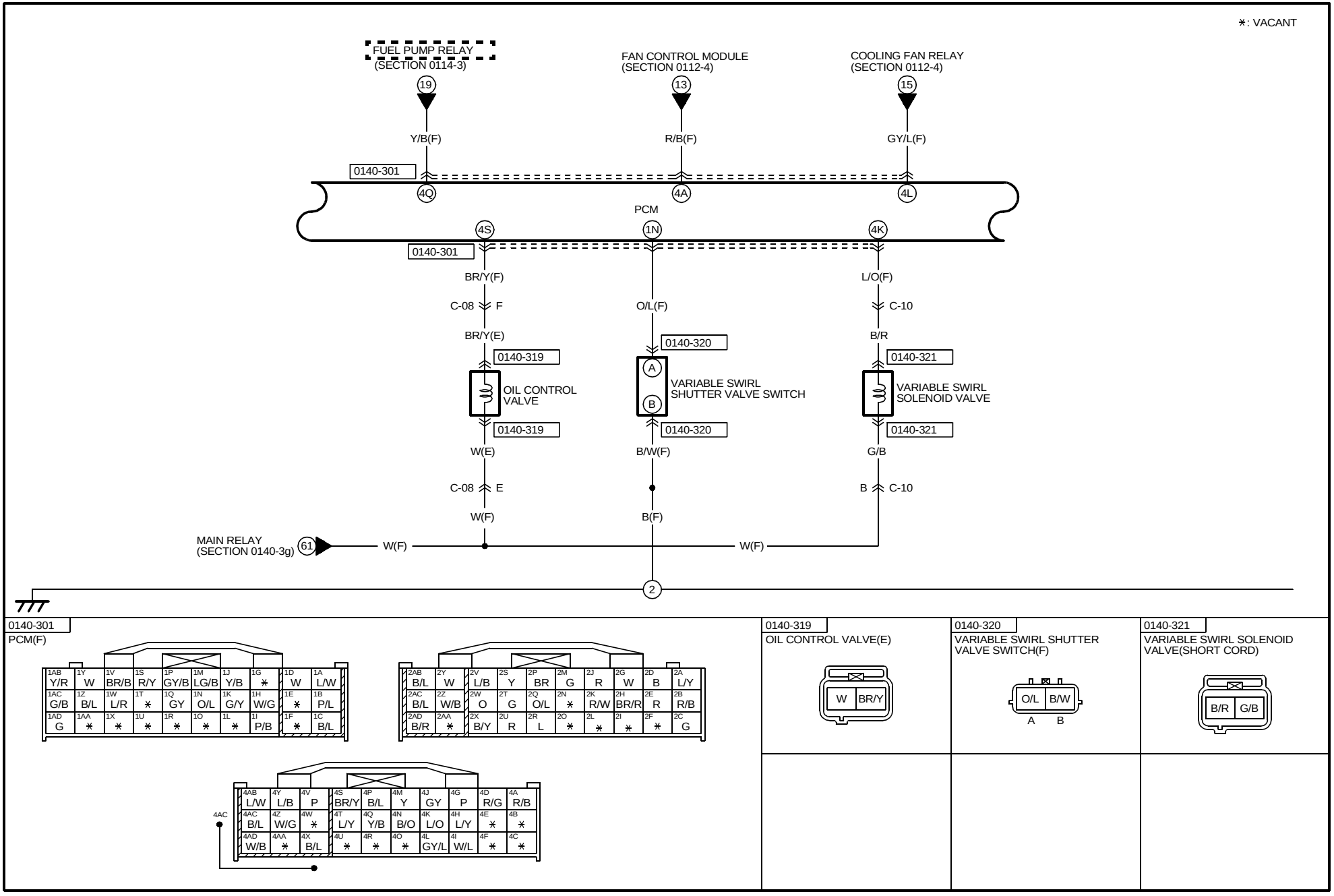

https://www.MyCarManual.com

HARNESS SYMBOL : (F) (E) (D) (R)

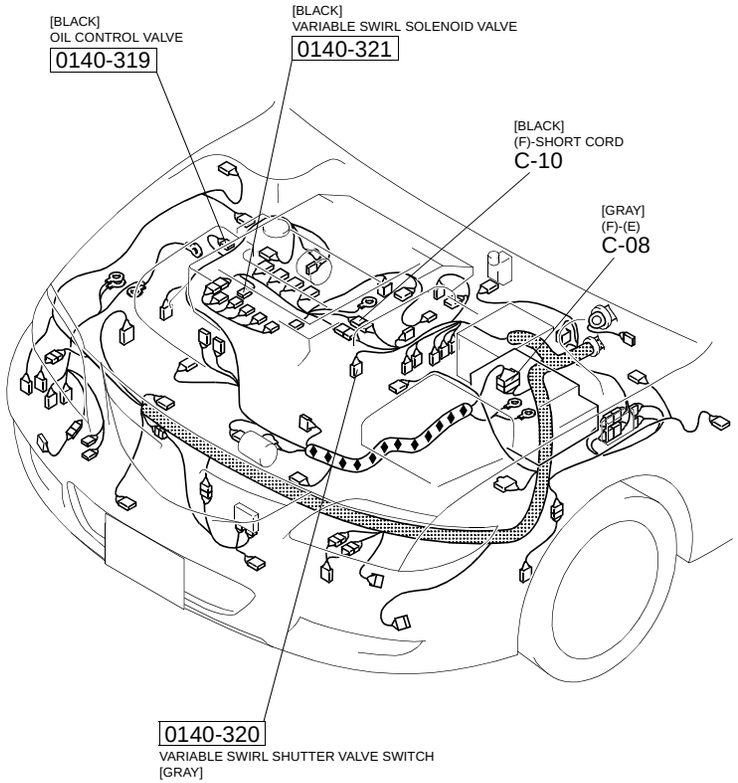

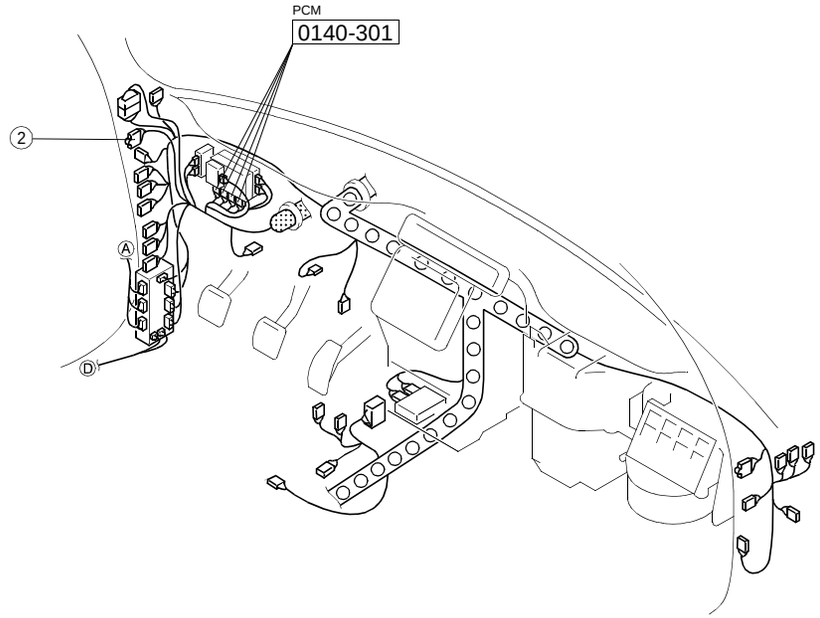

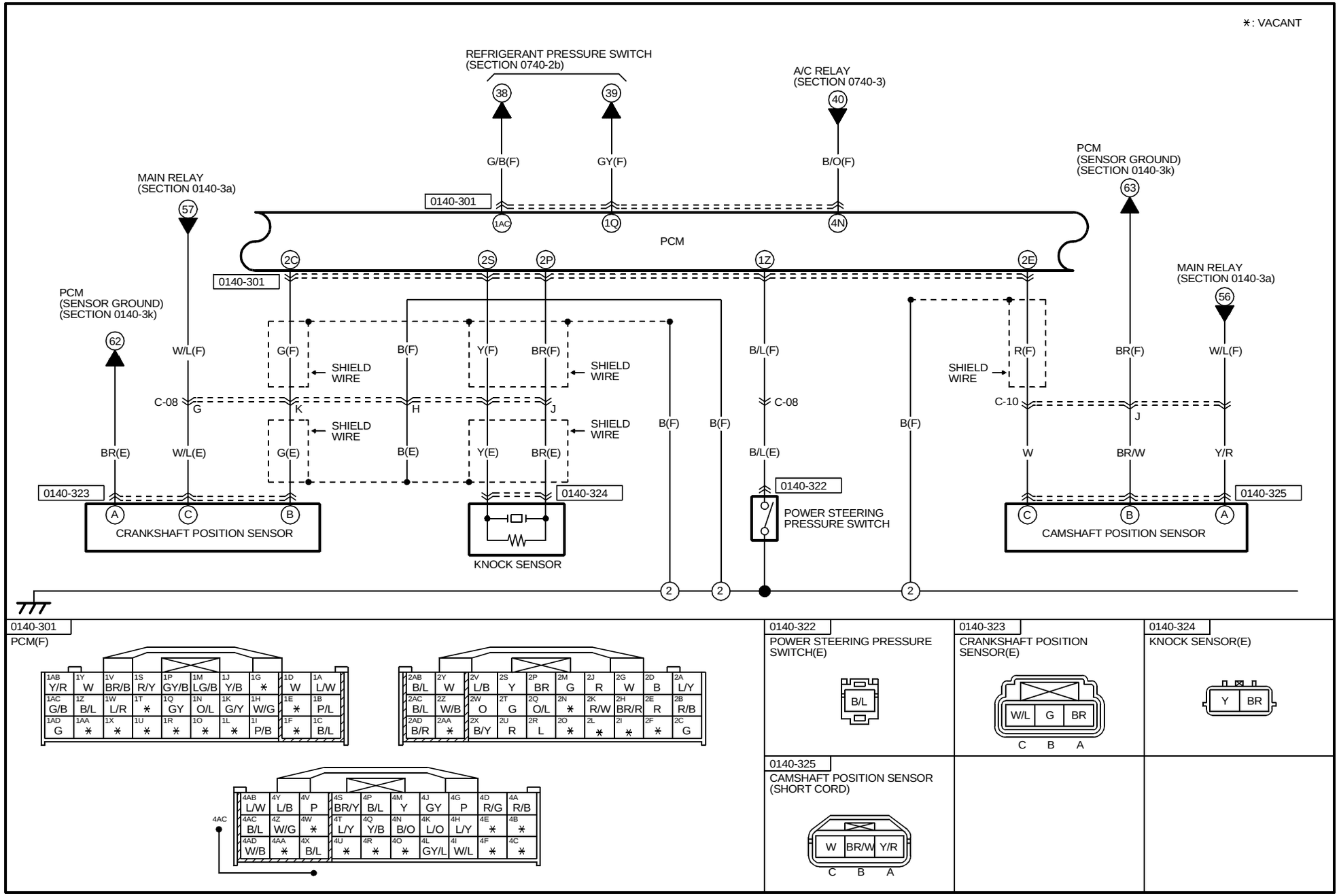
∗: VACANT
REFRIGERANT PRESSURE SWITCH
(SECTION 0740-2b)
A/C RELAY
(SECTION 0740-3)
MAIN RELAY
(SECTION 0140-3a)
PCM
(SENSOR GROUND)
(SECTION 0140-3k)
0140-301
PCM
G/B(F)
GY(F)
B/O(F)
W/L(F)
G(F)
B(F)
Y(F)
BR(F)
B/L(F)
R(F)
BR(F)
W/L(F)
SHIELD WIRE
C-08
C-10
BR(E)
W/L(E)
G(E)
B(E)
Y(E)
BR(E)
B/L(E)
W
BR/W
Y/R
0140-323
0140-324
0140-322
0140-325
CRANKSHAFT POSITION SENSOR
KNOCK SENSOR
POWER STEERING PRESSURE SWITCH
CAMSHAFT POSITION SENSOR
0140-301
PCM(F)
0140-322
POWER STEERING PRESSURE SWITCH(E)
0140-323
CRANKSHAFT POSITION SENSOR(E)
0140-324
KNOCK SENSOR(E)
0140-325
CAMSHAFT POSITION SENSOR (SHORT CORD)

HARNESS SYMBOL : (F) (E) (D) (R)

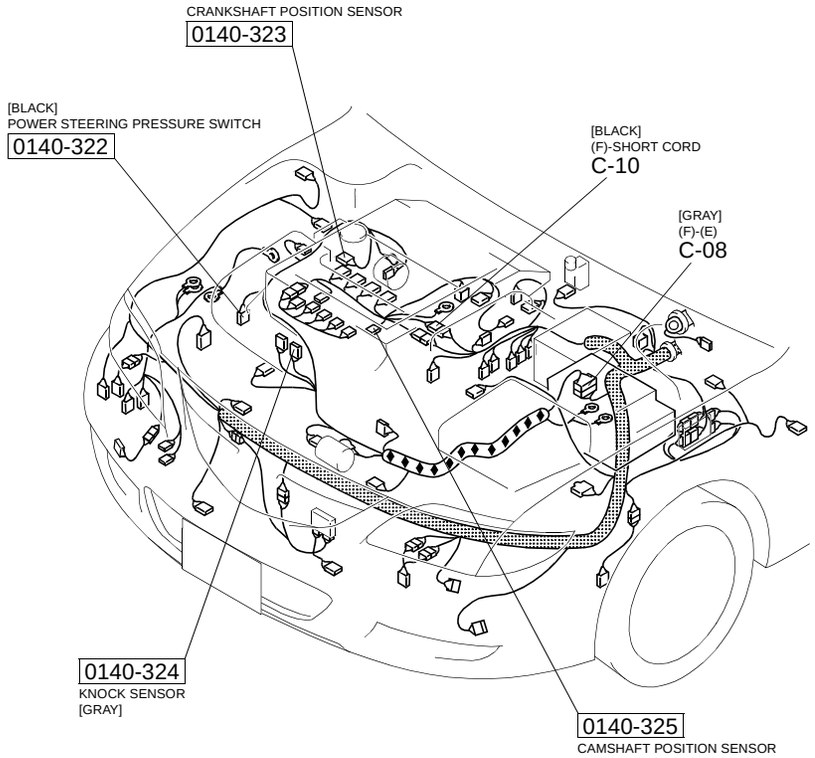

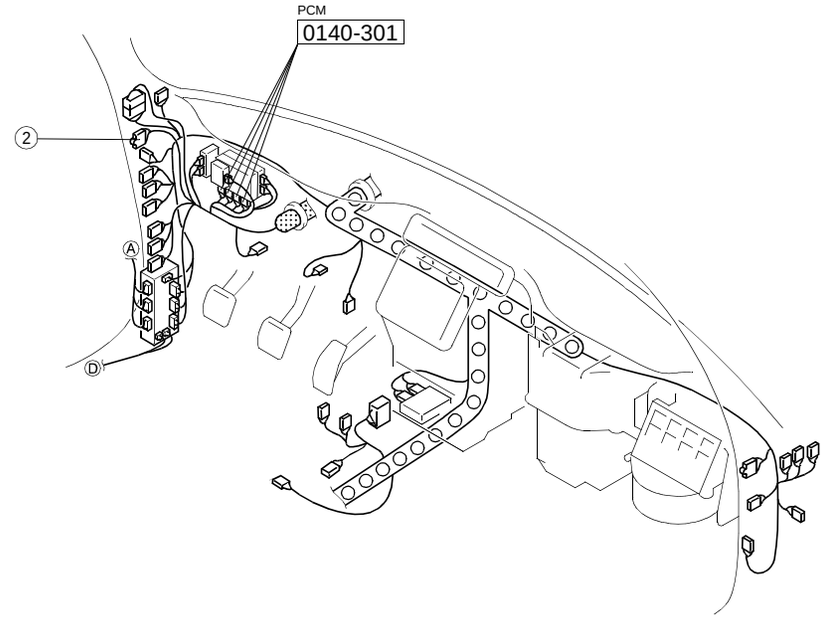

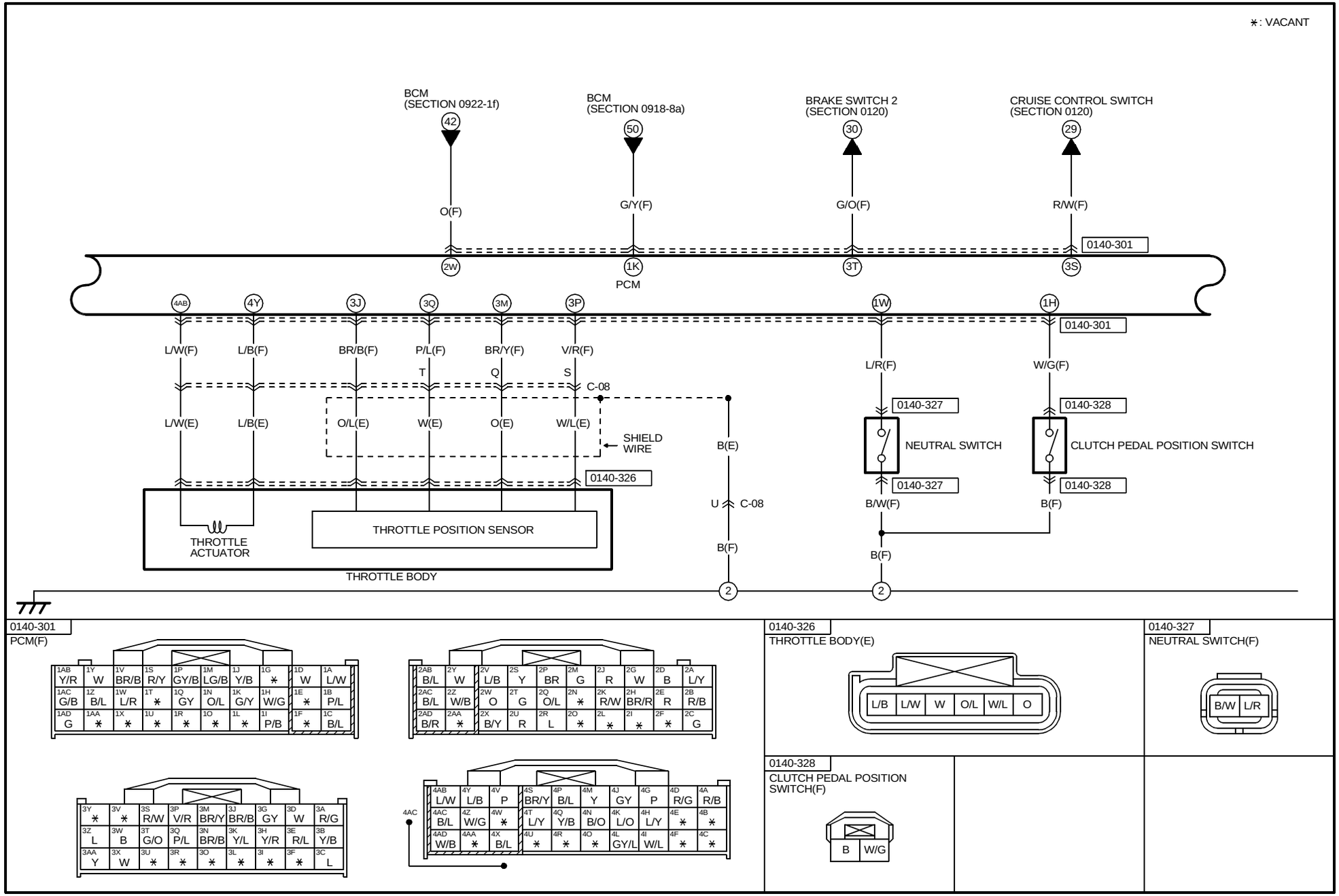

1AB Y/R	1Y W	1V BR/B	1S R/Y	1P GY/B	1M LG/B	1J Y/B	1G ∗	1D W	1A L/W
1AC G/B	1Z B/L	1W L/R	1T ∗	1Q GY	1N O/L	1K G/Y	1H W/G	1E ∗	1B P/L
1AD G	1AA ∗	1X ∗	1U ∗	1R ∗	1O ∗	1L ∗	1I P/B	1F ∗	1C B/L

2AB B/L	2Y W	2V L/B	2S Y	2P BR	2M G	2J R	2G W	2D B	2A L/Y
2AC B/L	2Z W/B	2W O	2T G	2Q O/L	2N ∗	2K R/W	2H BR/R	2E R	2B R/B
2AD B/R	2AA ∗	2X B/Y	2U R	2R L	2O ∗	2L ∗	2I ∗	2F ∗	2C G

3Y ∗	3V ∗	3S R/W	3P V/R	3M BR/Y	3J BR/B	3G GY	3D W	3A R/G	
3Z L	3W B	3T G/O	3Q P/L	3N BR/B	3K Y/L	3H Y/R	3E R/L	3B Y/B	
3AA Y	3X W	3U ∗	3R ∗	3O ∗	3L ∗	3I ∗	3F ∗	3C L	

4AB L/W	4Y L/B	4V P	4S BR/Y	4P B/L	4M Y	4J GY	4G P	4D R/G	4A R/B	
4AC B/L	4Z W/G	4W ∗	4T L/Y	4Q Y/B	4N B/O	4K L/O	4H L/Y	4E ∗	4B ∗	
4AD W/B	4AA ∗	4X B/L	4U ∗	4R ∗	4O ∗	4L GY/L	4I W/L	4F ∗	4C ∗	

HARNESS SYMBOL : (F) (E) (D) (R)

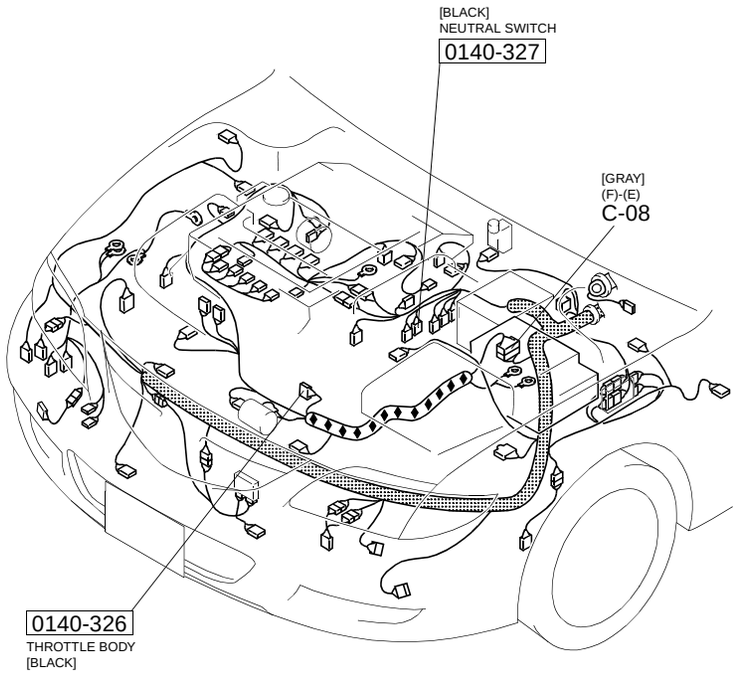

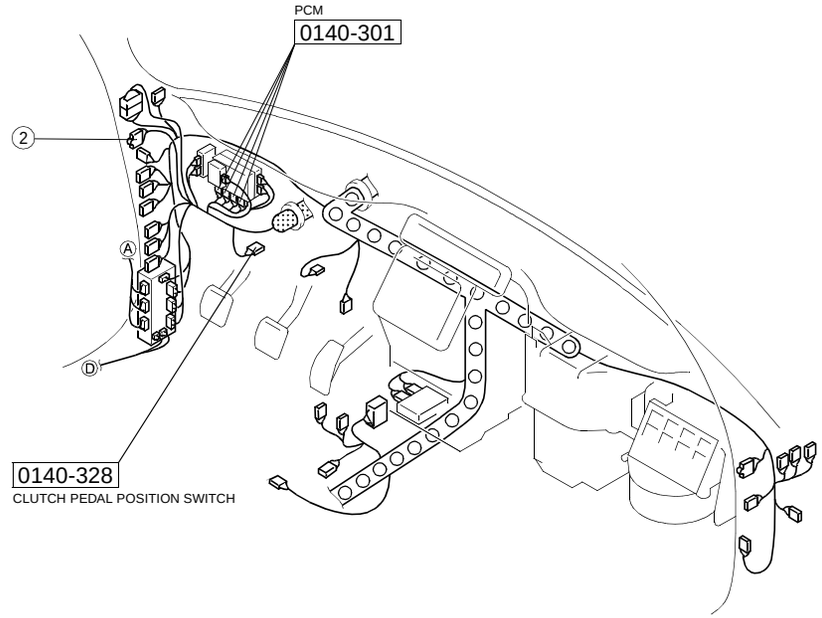

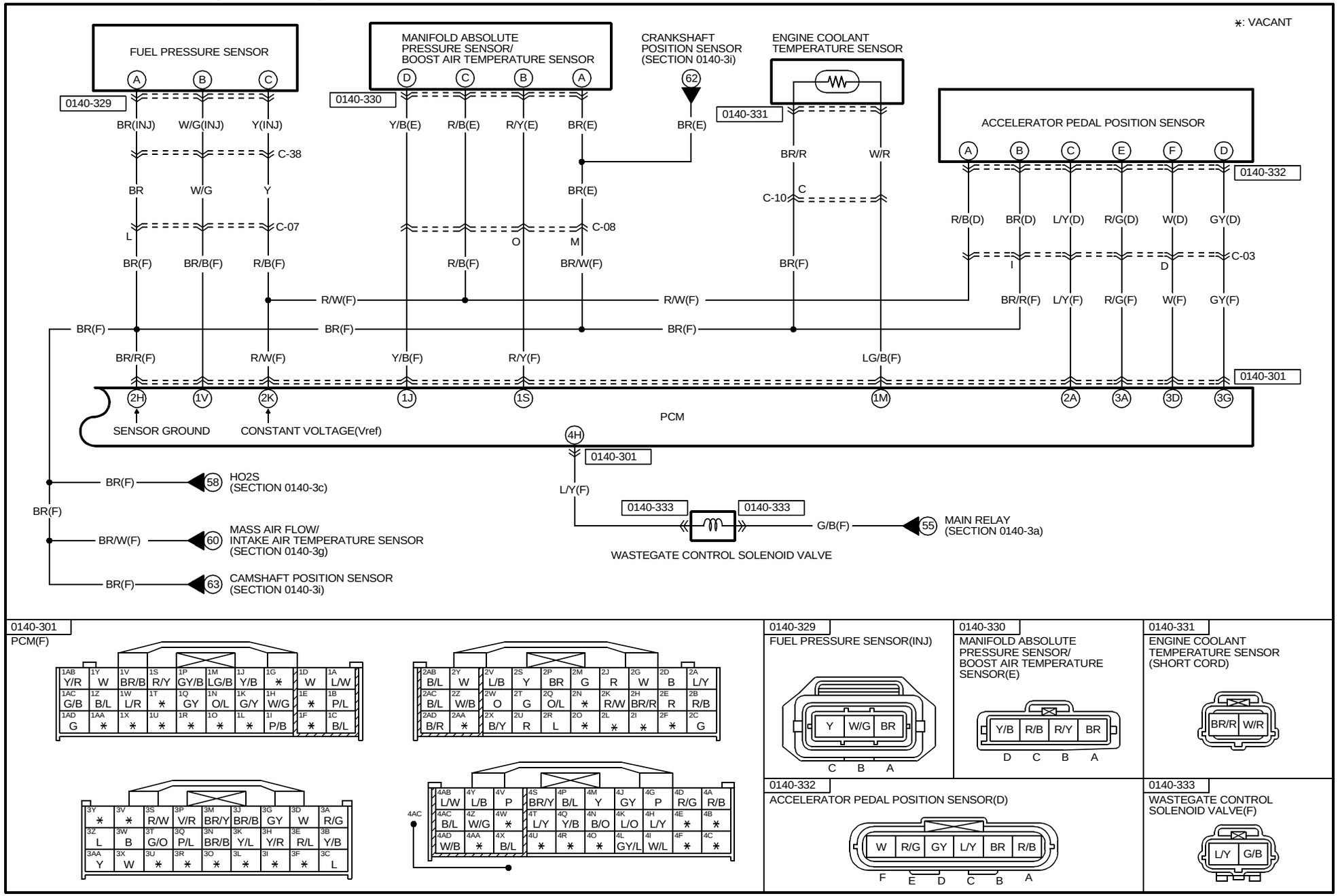
∗: VACANT
FUEL PRESSURE SENSOR
MANIFOLD ABSOLUTE PRESSURE SENSOR/ BOOST AIR TEMPERATURE SENSOR
CRANKSHAFT POSITION SENSOR (SECTION 0140-3i)
ENGINE COOLANT TEMPERATURE SENSOR
ACCELERATOR PEDAL POSITION SENSOR
0140-329
0140-330
0140-331
0140-332
0140-301
BR(INJ) W/G(INJ) Y(INJ)
C-38
BR W/G Y
C-07
L
BR(F) BR/B(F) R/B(F)
Y/B(E) R/B(E) R/Y(E) BR(E)
BR(E)
C-08
O M
R/B(F) BR/W(F)
BR(E)
BR/R W/R
C
C-10
BR(F)
R/B(D) BR(D) L/Y(D) R/G(D) W(D) GY(D)
I D
C-03
BR/R(F) L/Y(F) R/G(F) W(F) GY(F)
R/W(F)
BR(F)
BR/R(F) R/W(F) Y/B(F) R/Y(F) LG/B(F)
2H 1V 2K 1J 1S 1M 2A 3A 3D 3G
PCM
SENSOR GROUND
CONSTANT VOLTAGE(Vref)
4H
L/Y(F)
58 HO2S (SECTION 0140-3c)
60 MASS AIR FLOW/ INTAKE AIR TEMPERATURE SENSOR (SECTION 0140-3g)
63 CAMSHAFT POSITION SENSOR (SECTION 0140-3i)
0140-333
G/B(F)
55 MAIN RELAY (SECTION 0140-3a)
WASTEGATE CONTROL SOLENOID VALVE
0140-301
PCM(F)
0140-329
FUEL PRESSURE SENSOR(INJ)
Y W/G BR
C B A
0140-330
MANIFOLD ABSOLUTE PRESSURE SENSOR/ BOOST AIR TEMPERATURE SENSOR(E)
Y/B R/B R/Y BR
D C B A
0140-331
ENGINE COOLANT TEMPERATURE SENSOR (SHORT CORD)
BR/R W/R
0140-332
ACCELERATOR PEDAL POSITION SENSOR(D)
W R/G GY L/Y BR R/B
F E D C B A
0140-333
WASTEGATE CONTROL SOLENOID VALVE(F)
L/Y G/B

HARNESS SYMBOL : (F) (E) (D) (R)

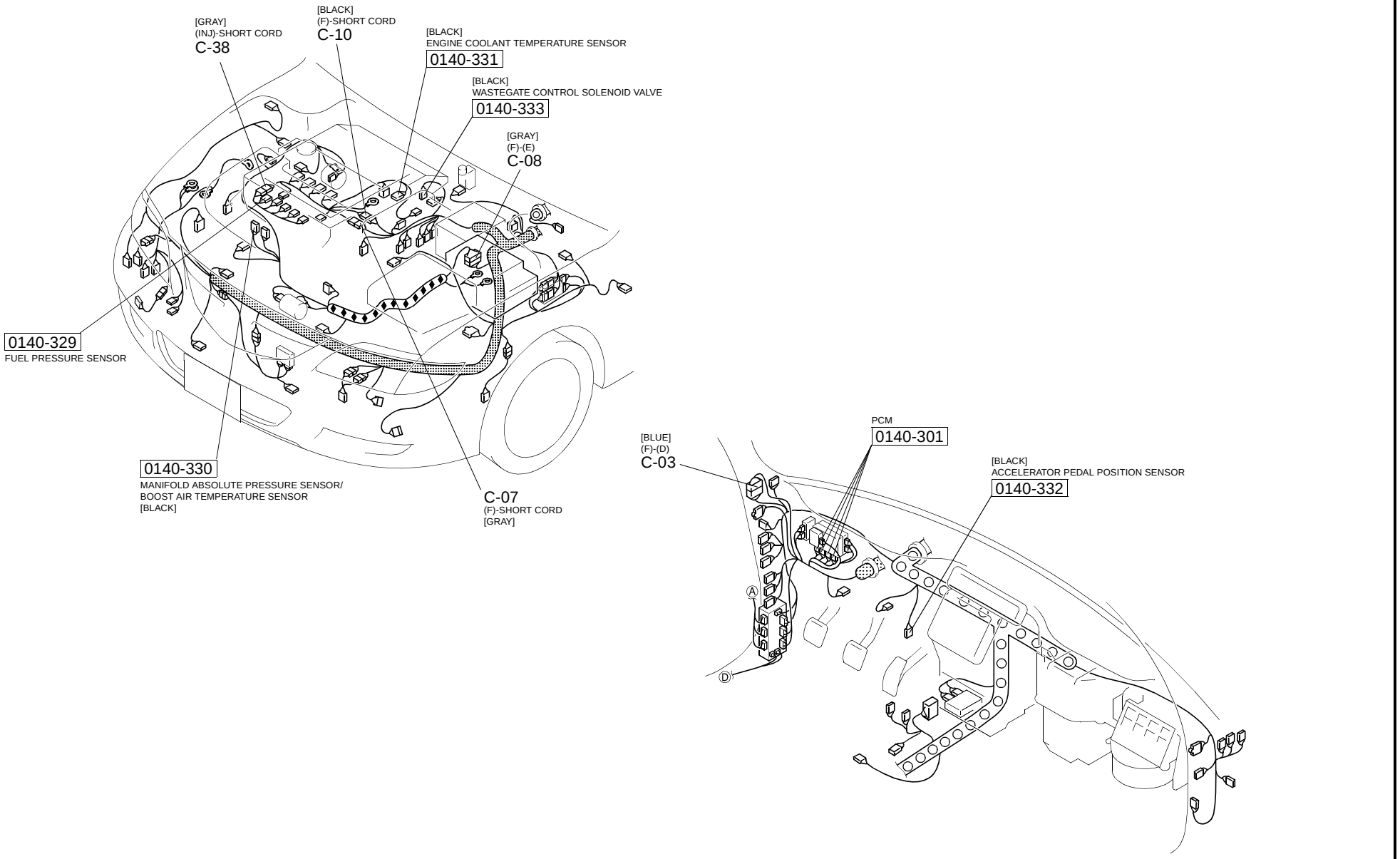

https://www.MyCarManual.com

ELECTRONIC 4WD CONTROL SYSTEM

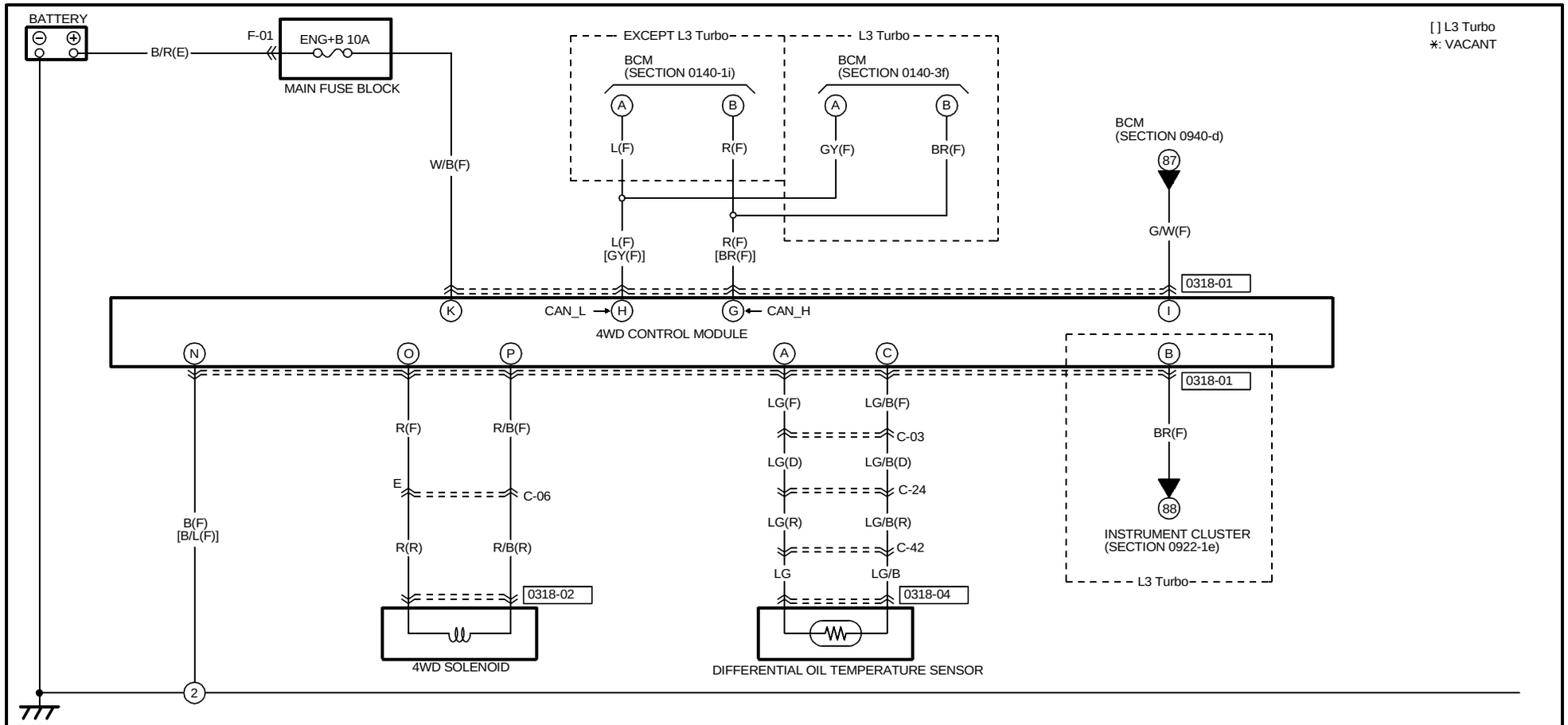

0318-01
4WD CONTROL MODULE(F)

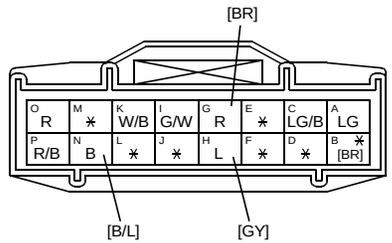

0318-02
4WD SOLENOID(R)

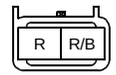

0318-04
DIFFERENTIAL OIL TEMPERATURE SENSOR
(SHORT CORD)

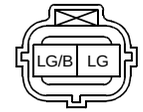

HARNESS SYMBOL : (F) (E) (D) (R)

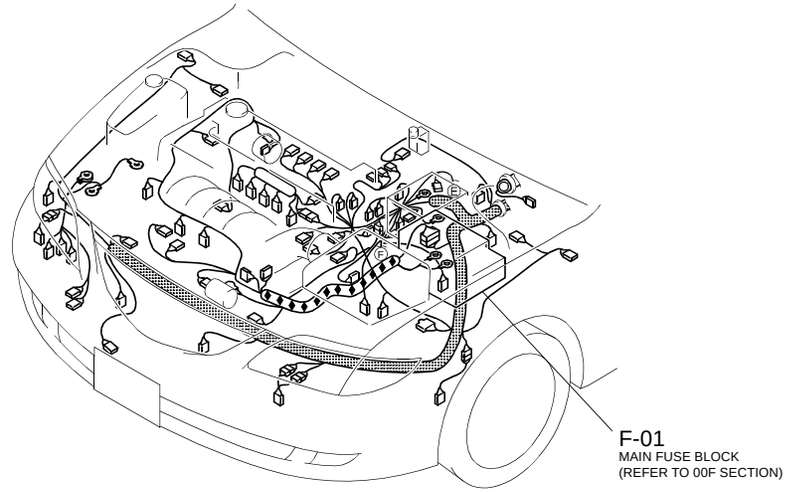

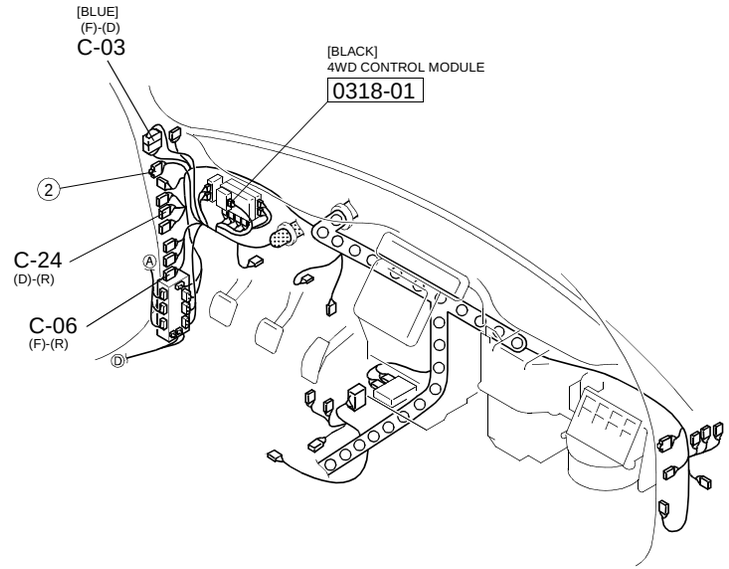

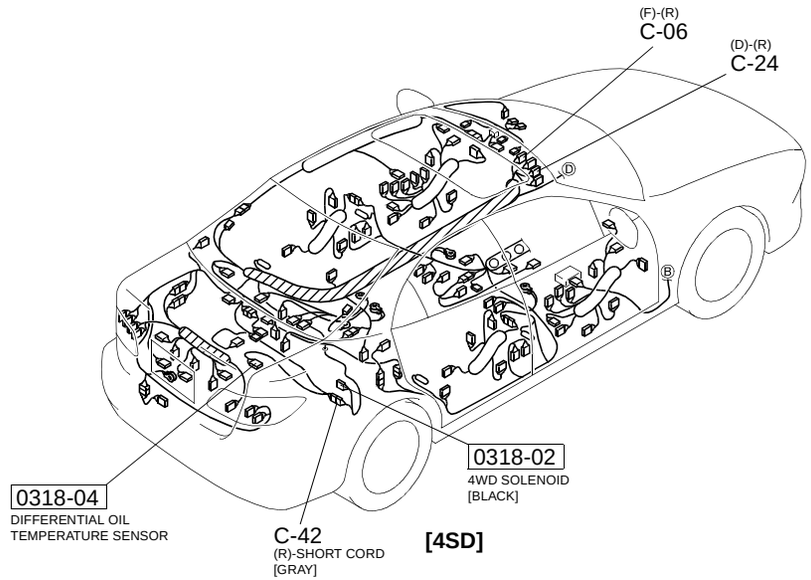

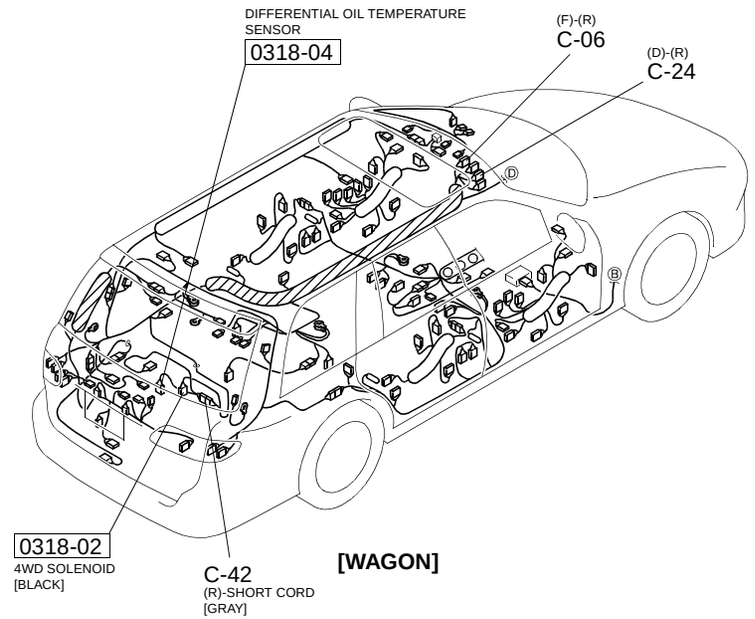

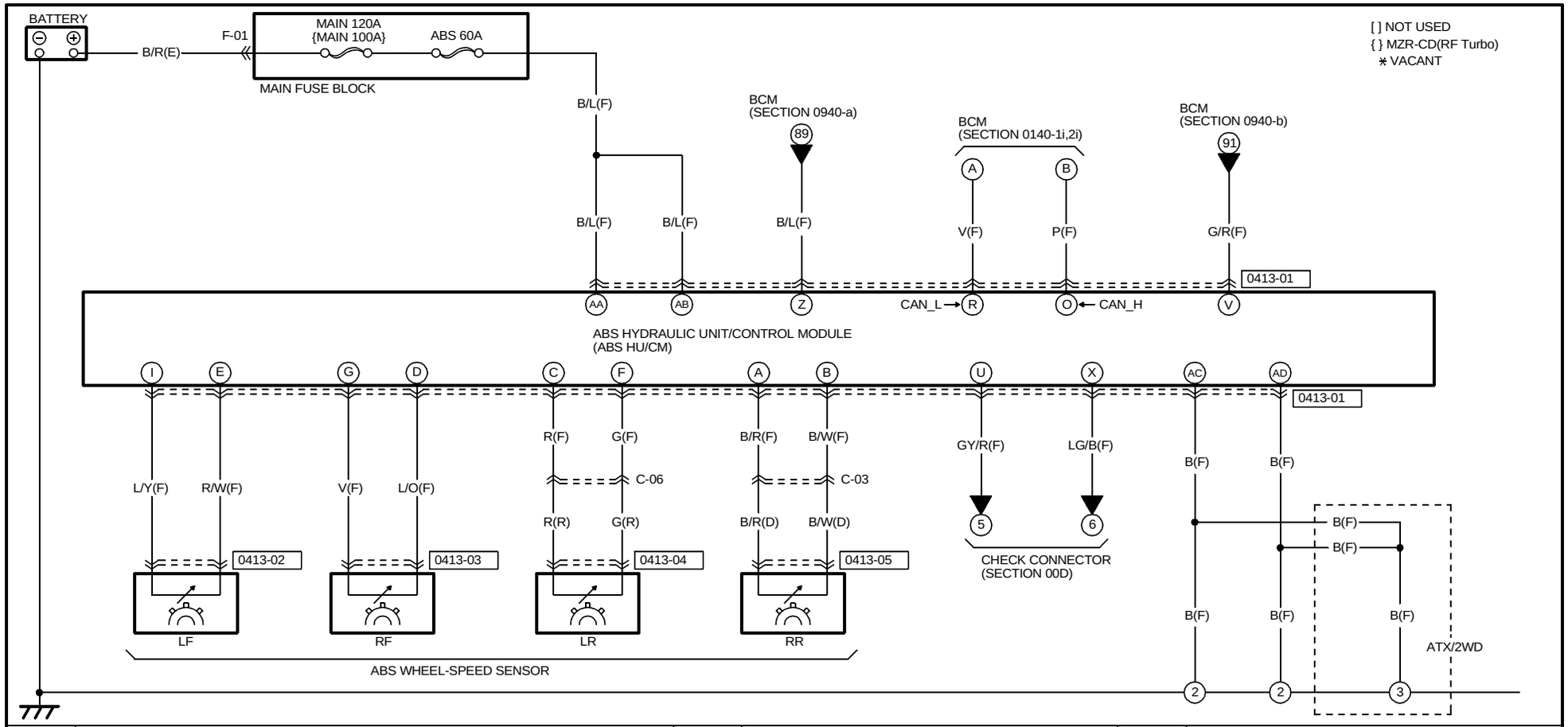

0413-01
ABS HU/CM(F)

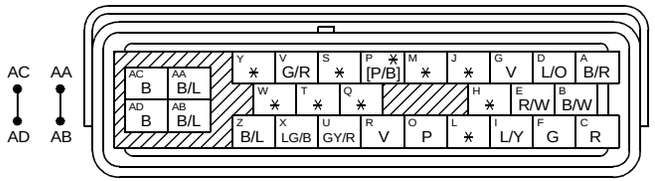

0413-02
ABS WHEEL-SPEED SENSOR LF(F)

0413-03
ABS WHEEL-SPEED SENSOR RF(F)

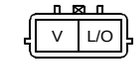

0413-04
ABS WHEEL-SPEED SENSOR LR(R)

0413-05
ABS WHEEL-SPEED SENSOR RR(D)

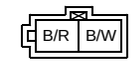

HARNESS SYMBOL : (F) (E) (D) (R)

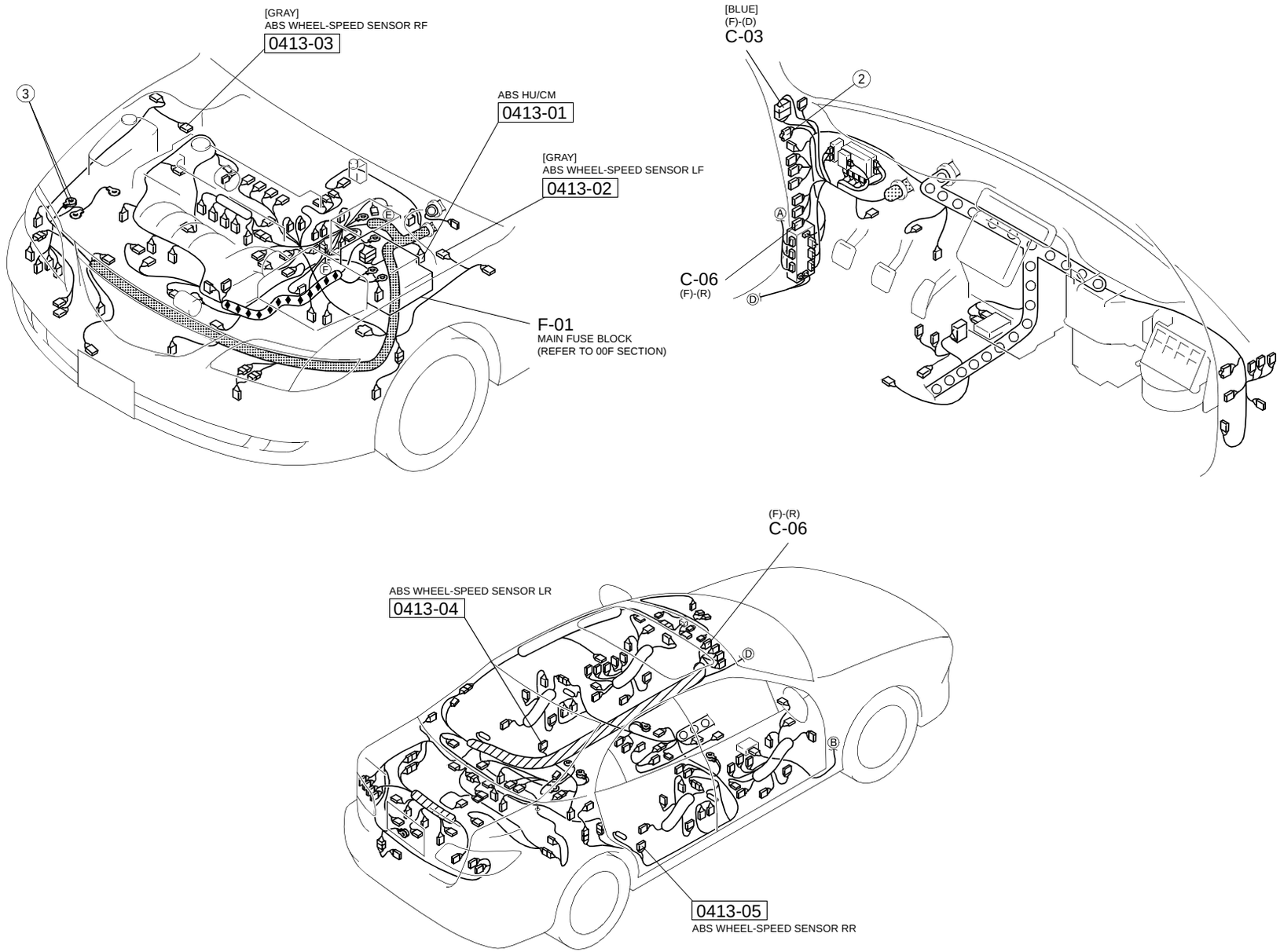

DYNAMIC STABILITY CONTROL (DSC)

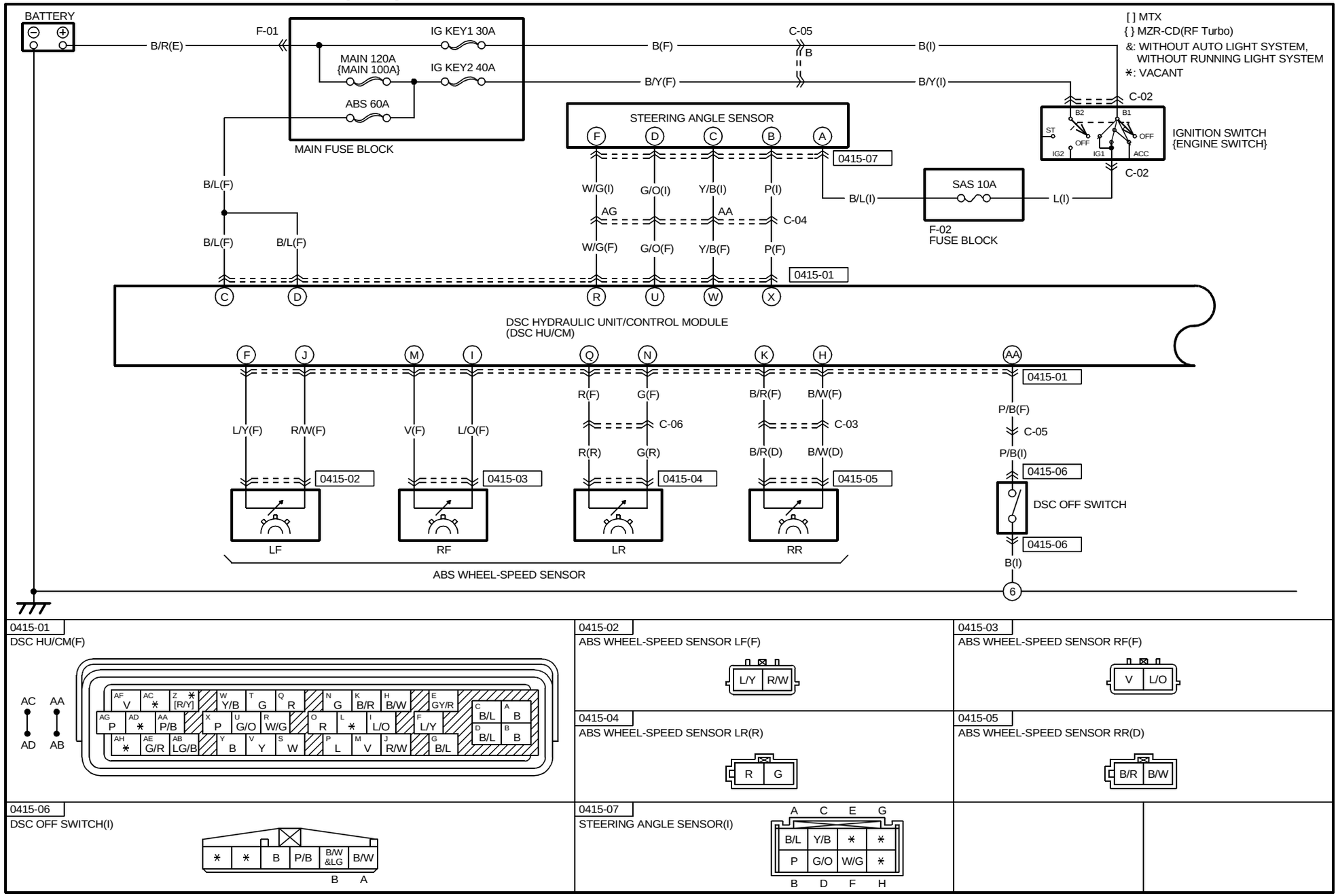

0415-01
DSC HU/CM(F)

0415-02
ABS WHEEL-SPEED SENSOR LF(F)

0415-03
ABS WHEEL-SPEED SENSOR RF(F)

0415-04
ABS WHEEL-SPEED SENSOR LR(R)

0415-05
ABS WHEEL-SPEED SENSOR RR(D)

0415-06
DSC OFF SWITCH(I)

0415-07
STEERING ANGLE SENSOR(I)

HARNESS SYMBOL : (F) (E) (D) (R)

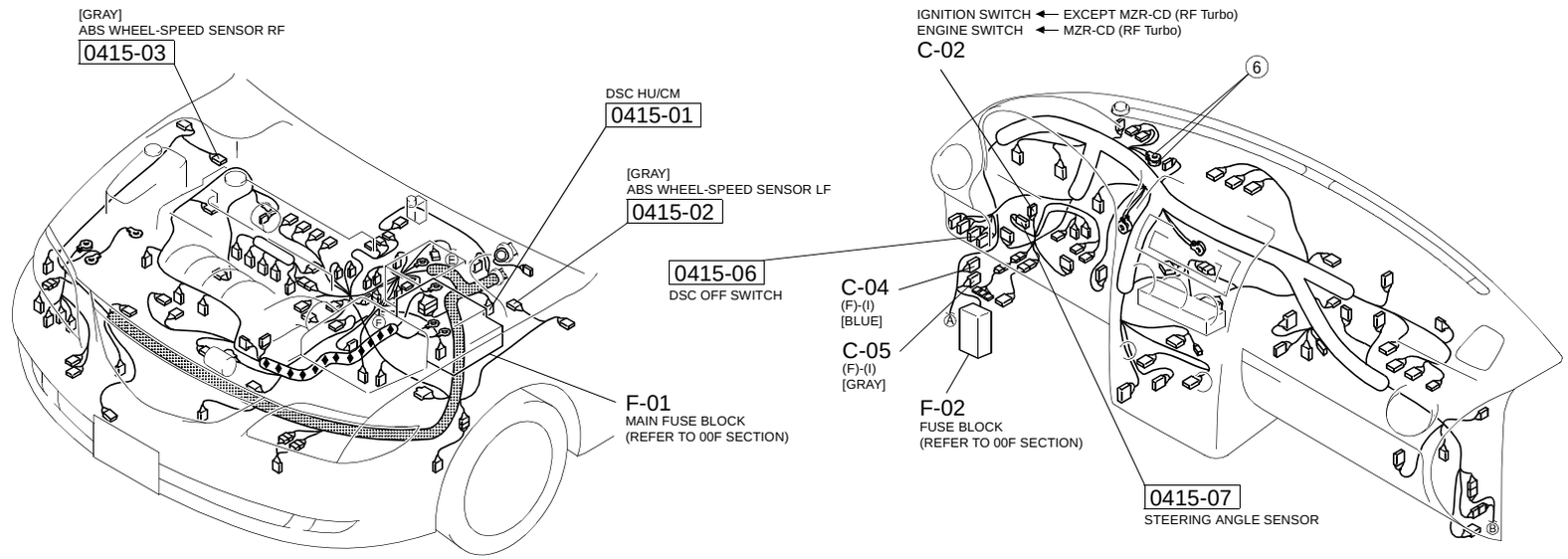

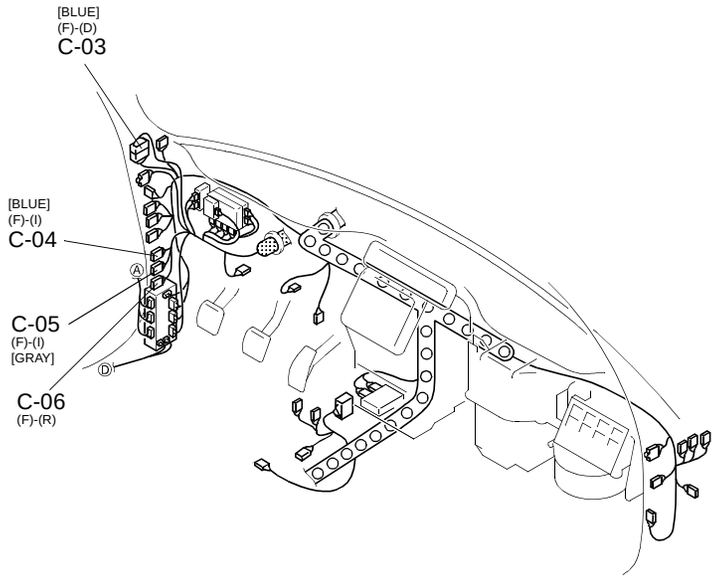

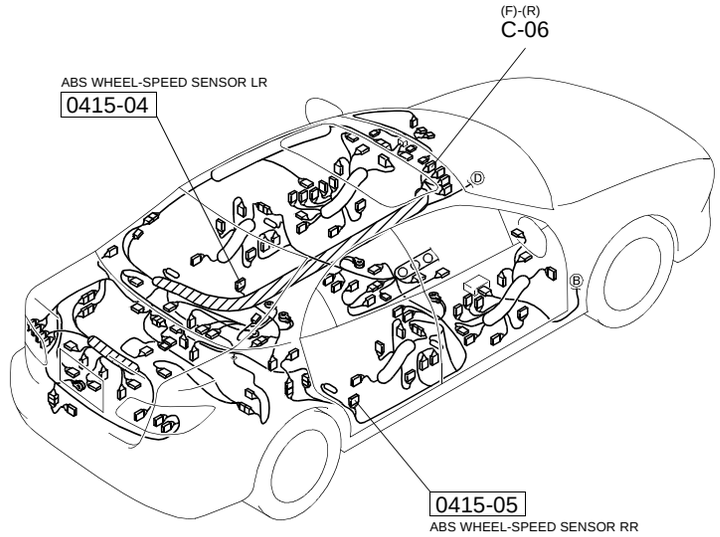

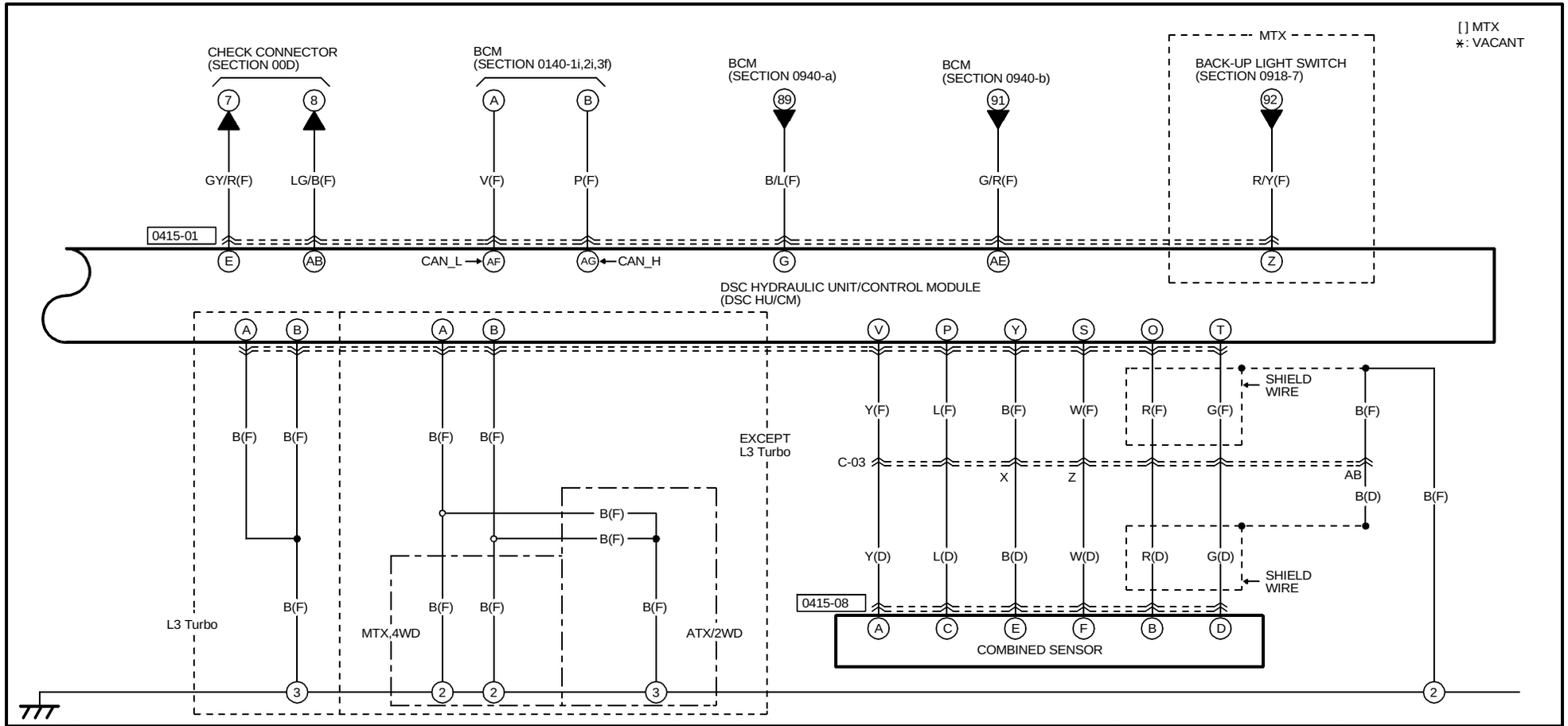

0415-01
DSC HU/CM(F)

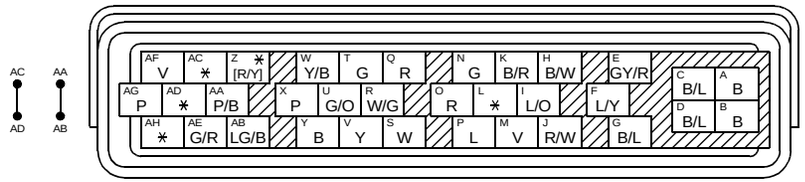

0415-08
COMBINED SENSOR(D)

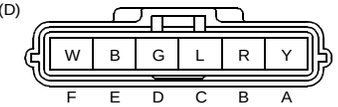

HARNESS SYMBOL : (F) (E) (D) (R)

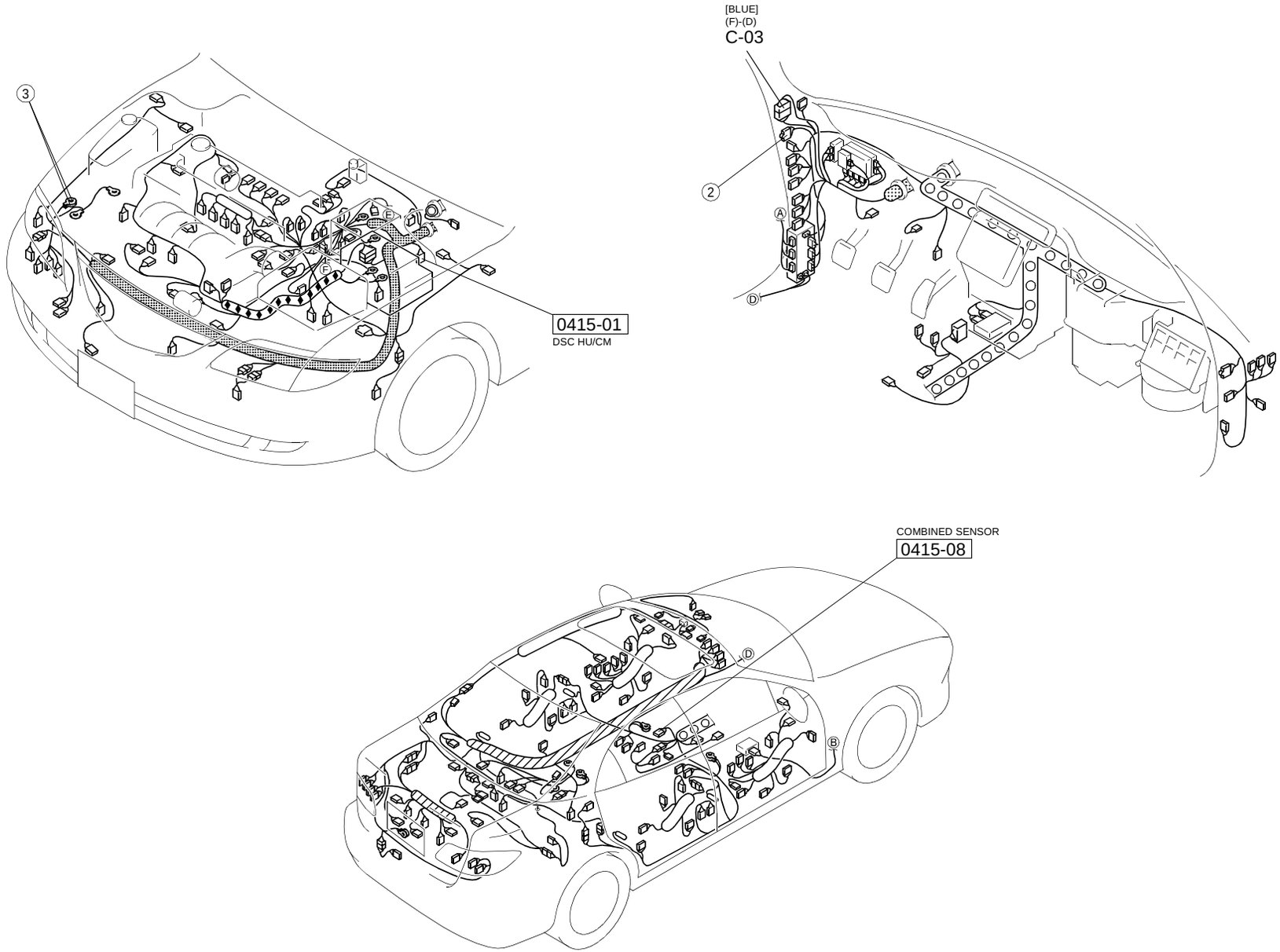

2WD EC-AT CONTROL SYSTEM

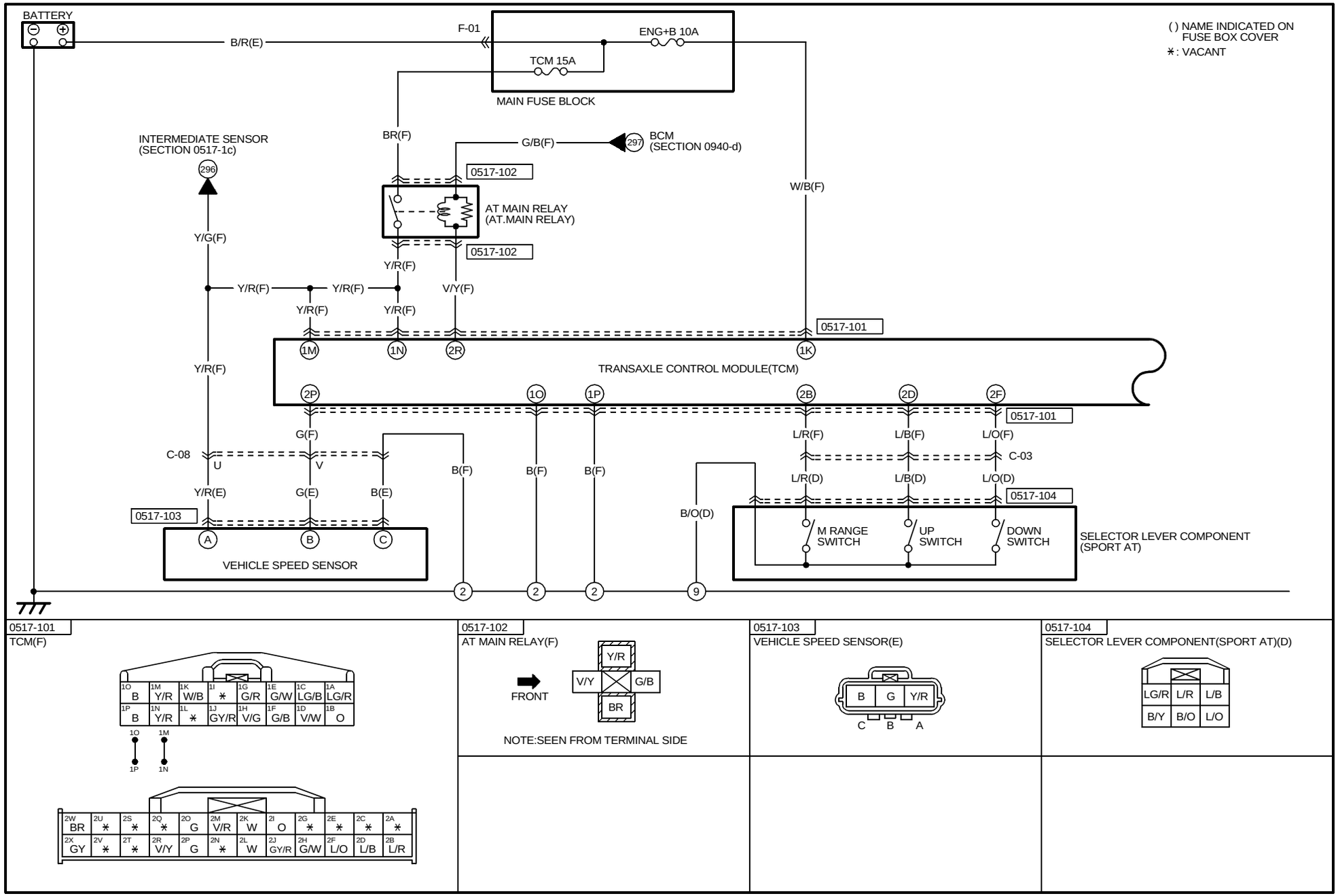

0517-101
TCM(F)

0517-102
AT MAIN RELAY(F)

NOTE:SEEN FROM TERMINAL SIDE

0517-103
VEHICLE SPEED SENSOR(E)

0517-104
SELECTOR LEVER COMPONENT(SPORT AT)(D)

HARNESS SYMBOL : (F) (E) (D) (R)

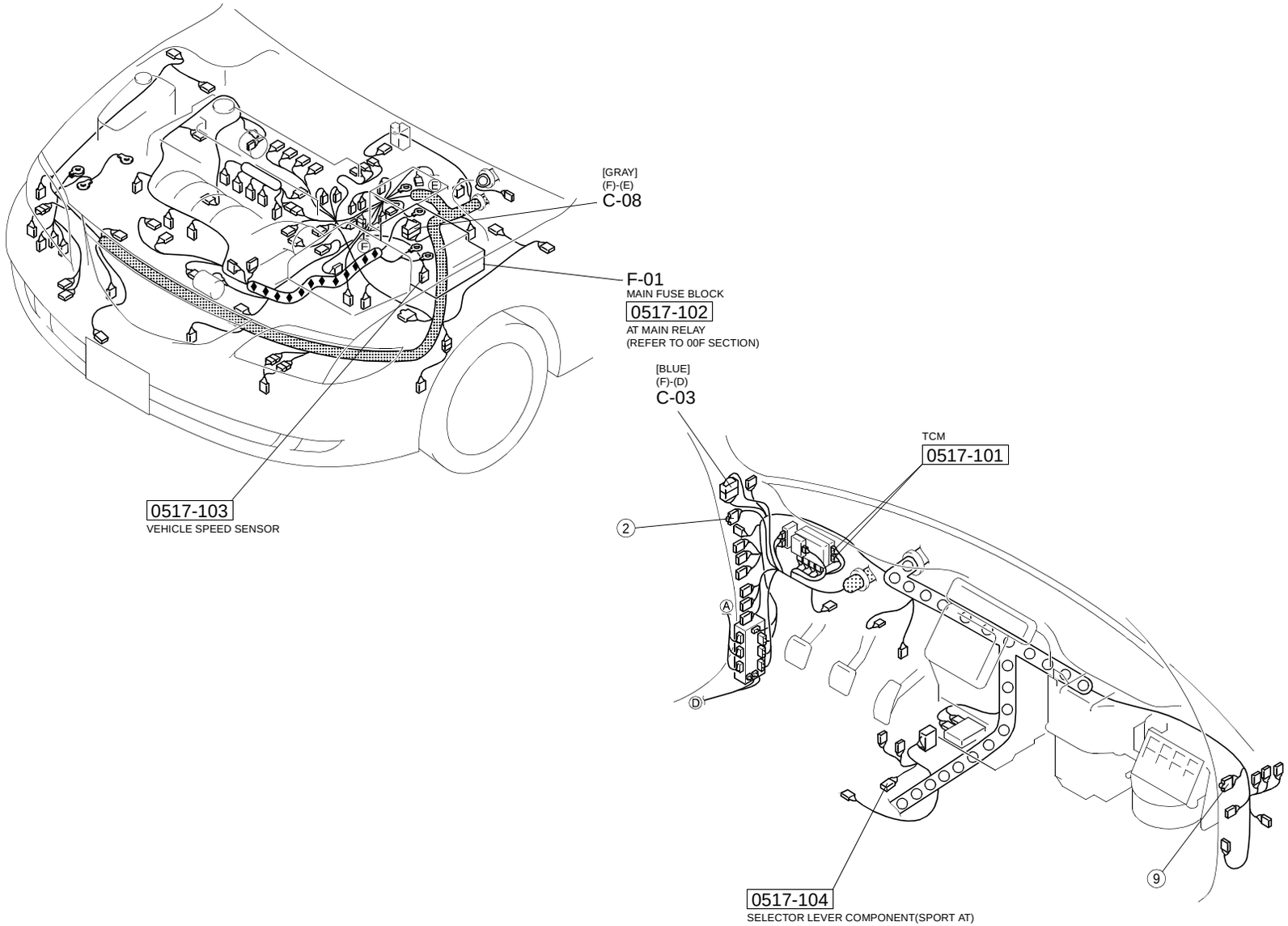

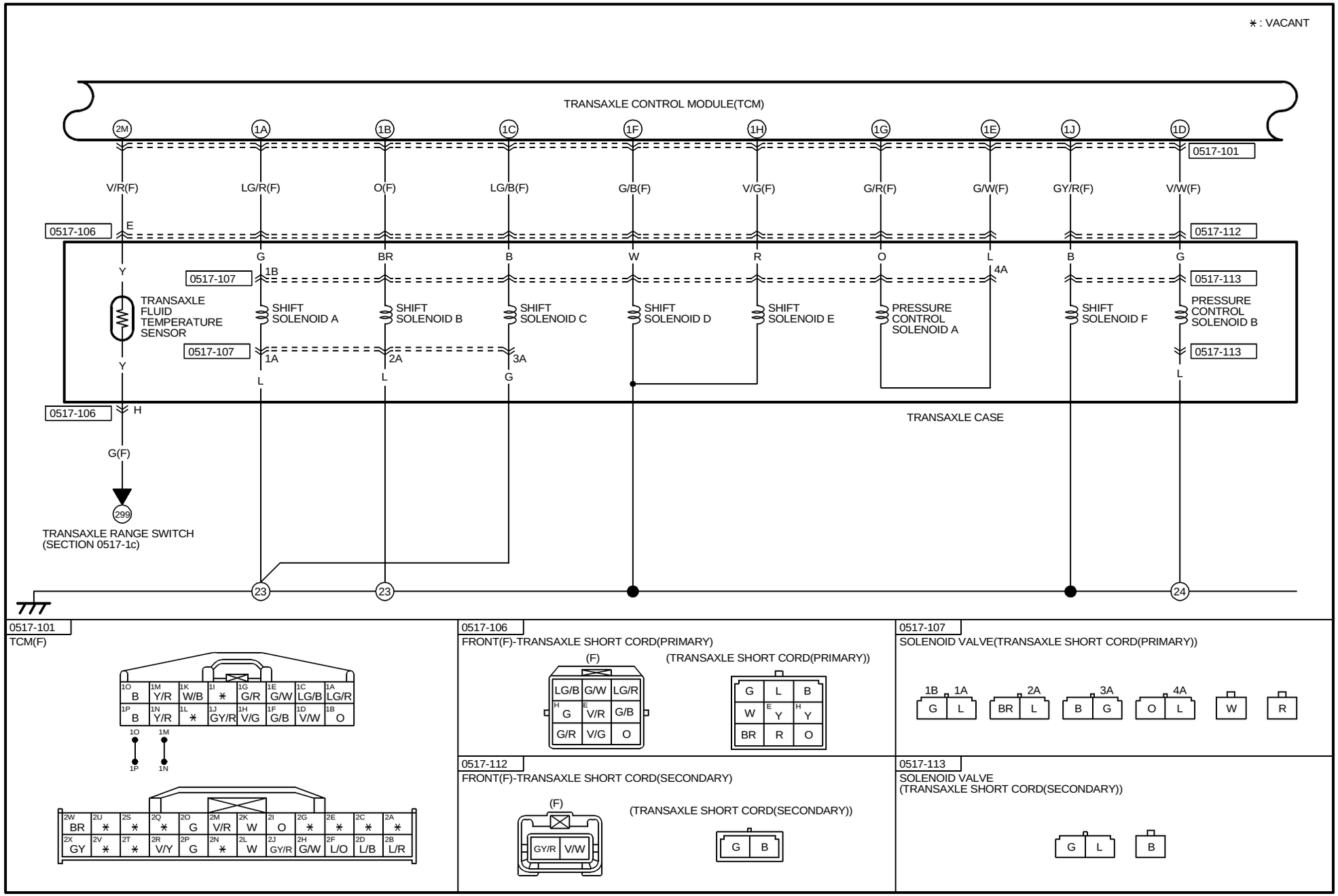
∗ : VACANT
TRANSAXLE CONTROL MODULE(TCM)
2M
1A
1B
1C
1F
1H
1G
1E
1J
1D
0517-101
V/R(F)
LG/R(F)
O(F)
LG/B(F)
G/B(F)
V/G(F)
G/R(F)
G/W(F)
GY/R(F)
V/W(F)
0517-106
E
0517-112
G
BR
B
W
R
O
L
B
G
Y
1B
4A
0517-107
0517-113
TRANSAXLE FLUID TEMPERATURE SENSOR
SHIFT SOLENOID A
SHIFT SOLENOID B
SHIFT SOLENOID C
SHIFT SOLENOID D
SHIFT SOLENOID E
PRESSURE CONTROL SOLENOID A
SHIFT SOLENOID F
PRESSURE CONTROL SOLENOID B
0517-107
1A
2A
3A
0517-113
Y
L
L
G
L
0517-106
H
TRANSAXLE CASE
G(F)
299
TRANSAXLE RANGE SWITCH
(SECTION 0517-1c)
23
23
24
0517-101
TCM(F)
1O B
1M Y/R
1K W/B
1I ∗
1G G/R
1E G/W
1C LG/B
1A LG/R
1P B
1N Y/R
1L ∗
1J GY/R
1H V/G
1F G/B
1D V/W
1B O
1O 1M
1P 1N
2W BR
2U ∗
2S ∗
2Q ∗
2O G
2M V/R
2K W
2I O
2G ∗
2E ∗
2C ∗
2A ∗
2X GY
2V ∗
2T ∗
2R V/Y
2P G
2N ∗
2L W
2J GY/R
2H G/W
2F L/O
2D L/B
2B L/R
0517-106
FRONT(F)-TRANSAXLE SHORT CORD(PRIMARY)
(F)
LG/B G/W LG/R
H G E V/R G/B
G/R V/G O
(TRANSAXLE SHORT CORD(PRIMARY))
G L B
W E Y H Y
BR R O
0517-107
SOLENOID VALVE(TRANSAXLE SHORT CORD(PRIMARY))
1B 1A
G L
2A
BR L
3A
B G
4A
O L
W
R
0517-112
FRONT(F)-TRANSAXLE SHORT CORD(SECONDARY)
(F)
GY/R V/W
(TRANSAXLE SHORT CORD(SECONDARY))
G B
0517-113
SOLENOID VALVE
(TRANSAXLE SHORT CORD(SECONDARY))
G L
B

HARNESS SYMBOL : (F) (E) (D) (R)

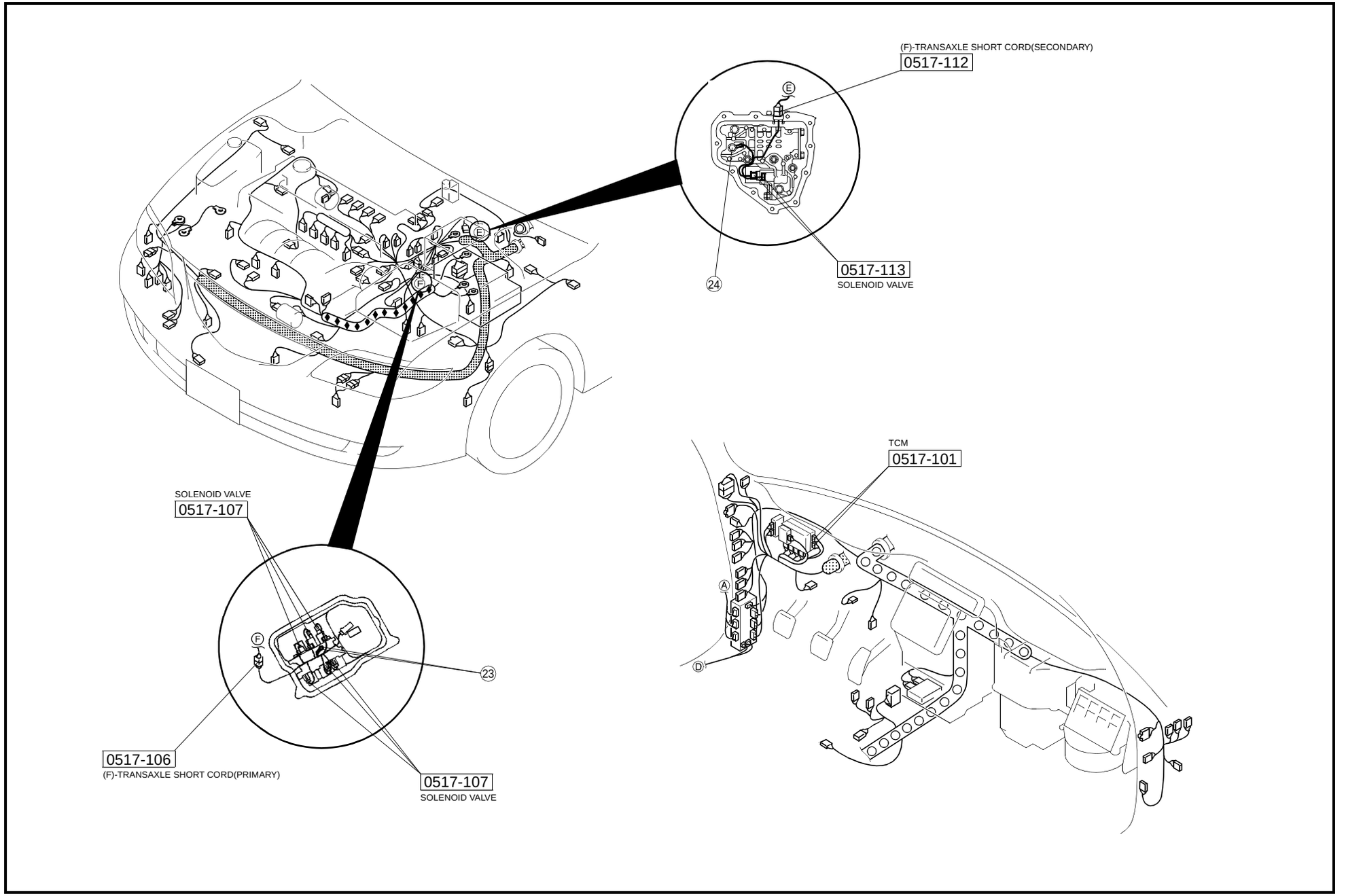

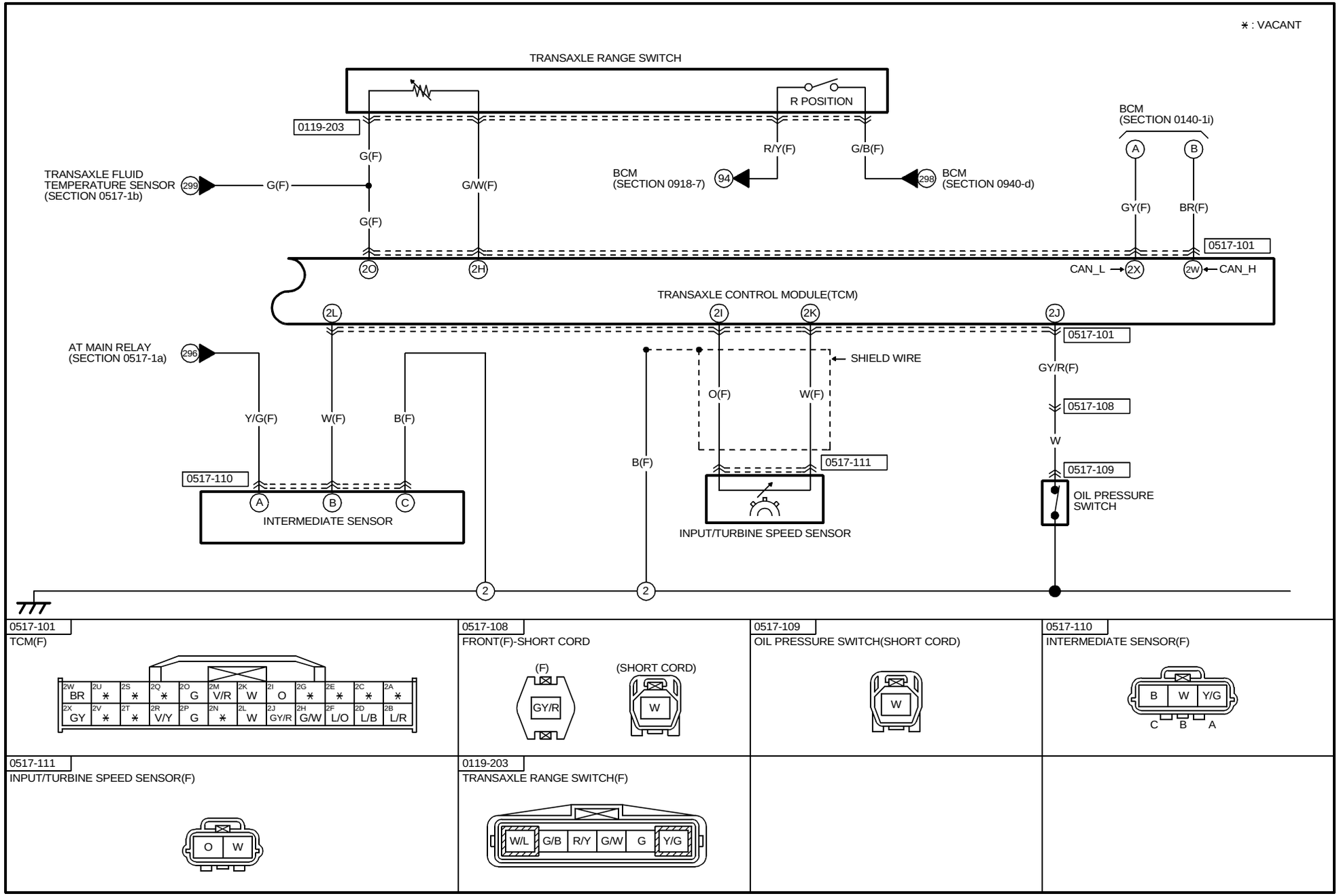

0517-101
TCM(F)

0517-108
FRONT(F)-SHORT CORD

0517-109
OIL PRESSURE SWITCH(SHORT CORD)

0517-110
INTERMEDIATE SENSOR(F)

0517-111
INPUT/TURBINE SPEED SENSOR(F)

0119-203
TRANSAXLE RANGE SWITCH(F)

HARNESS SYMBOL : (F) (E) (D) (R)

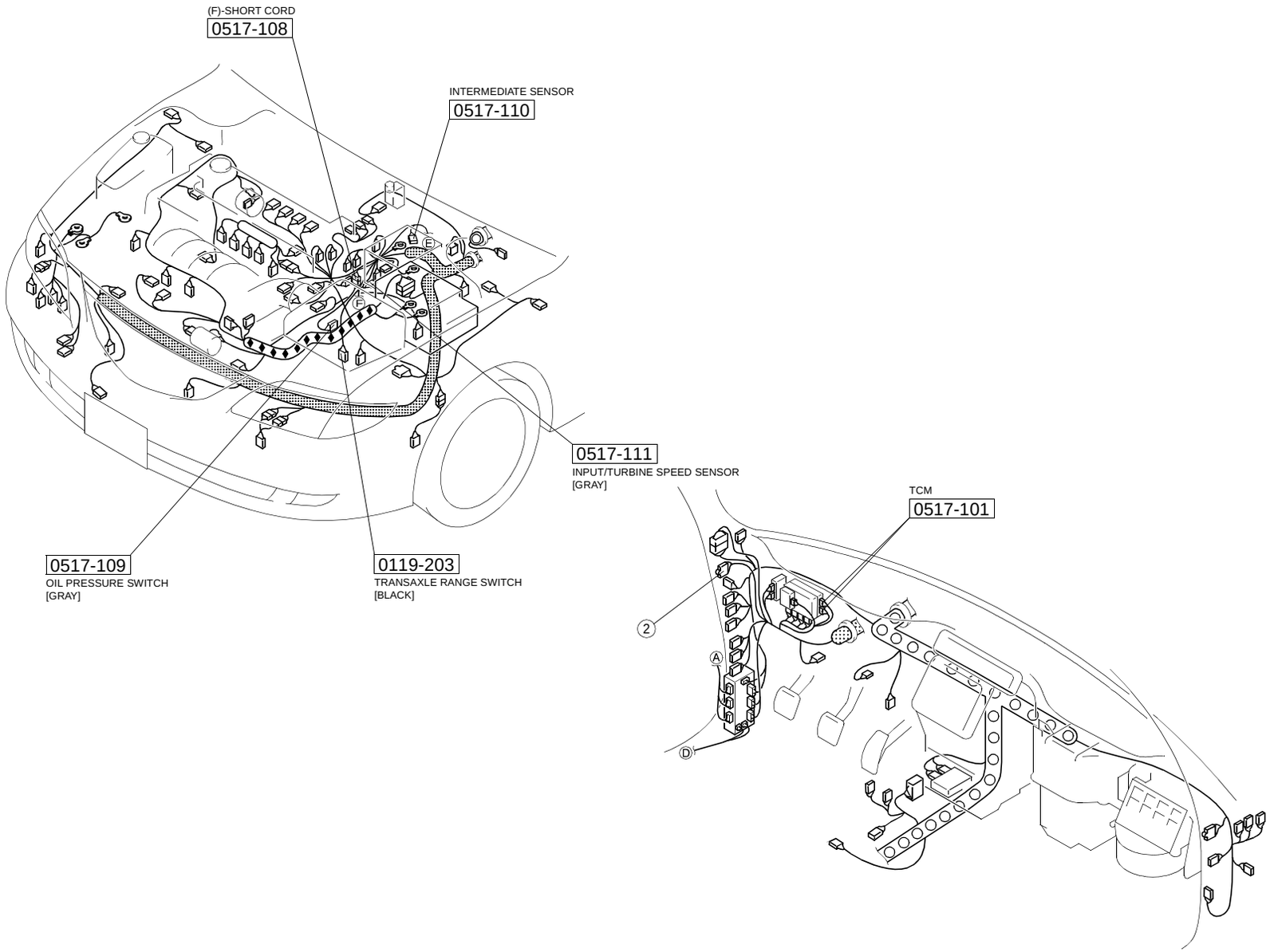

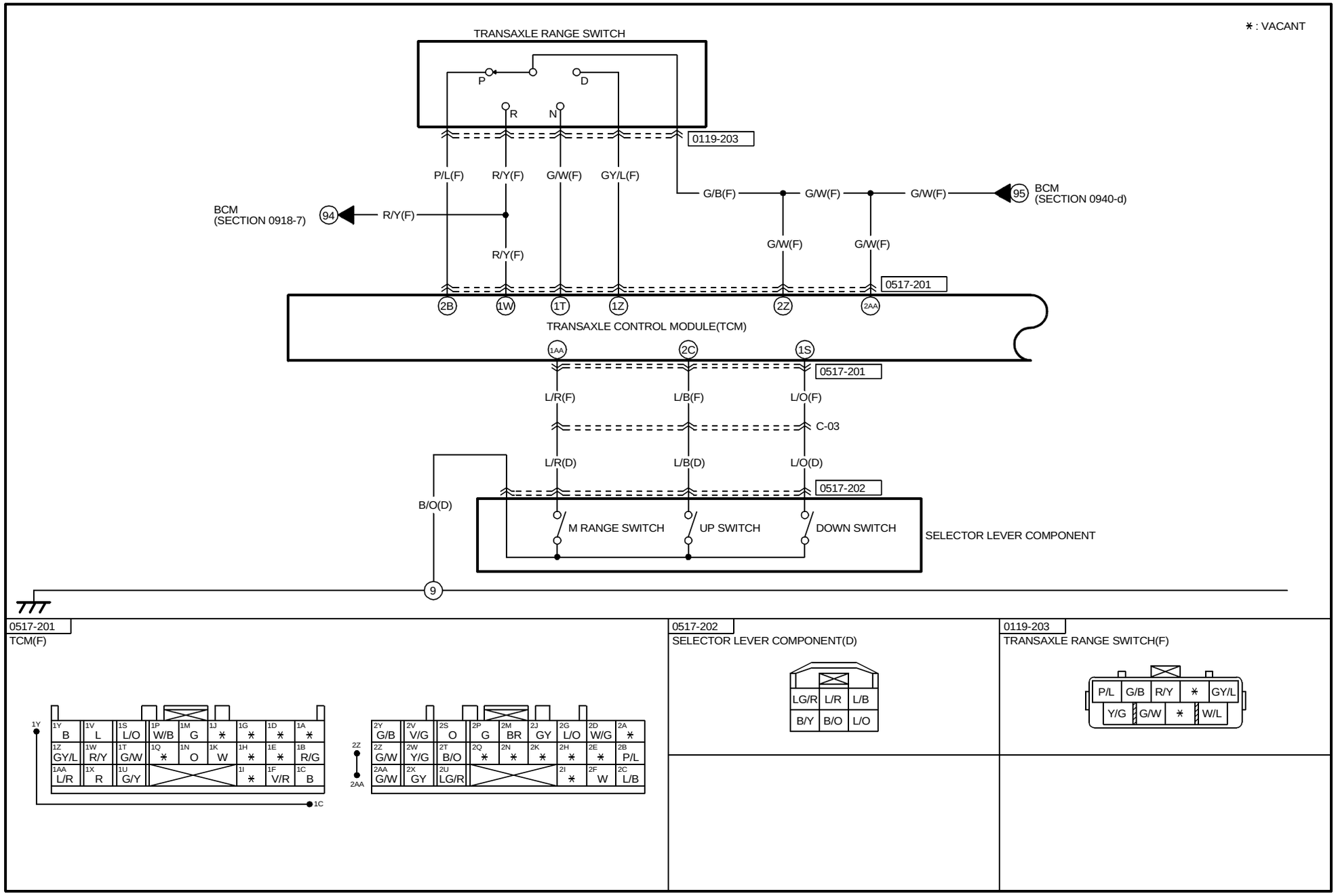

0517-201

TCM(F)

0517-202

SELECTOR LEVER COMPONENT(D)

0119-203

TRANSAXLE RANGE SWITCH(F)

HARNESS SYMBOL : (F) (E) (D) (R)

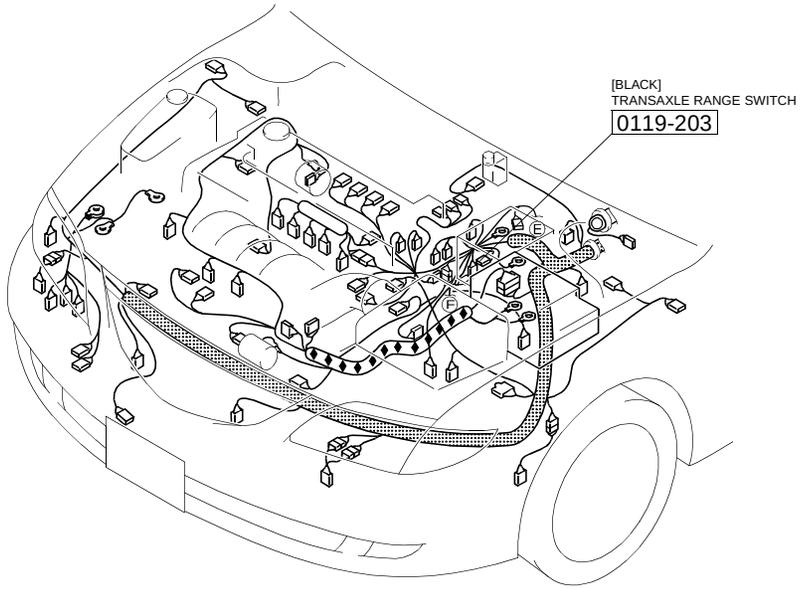

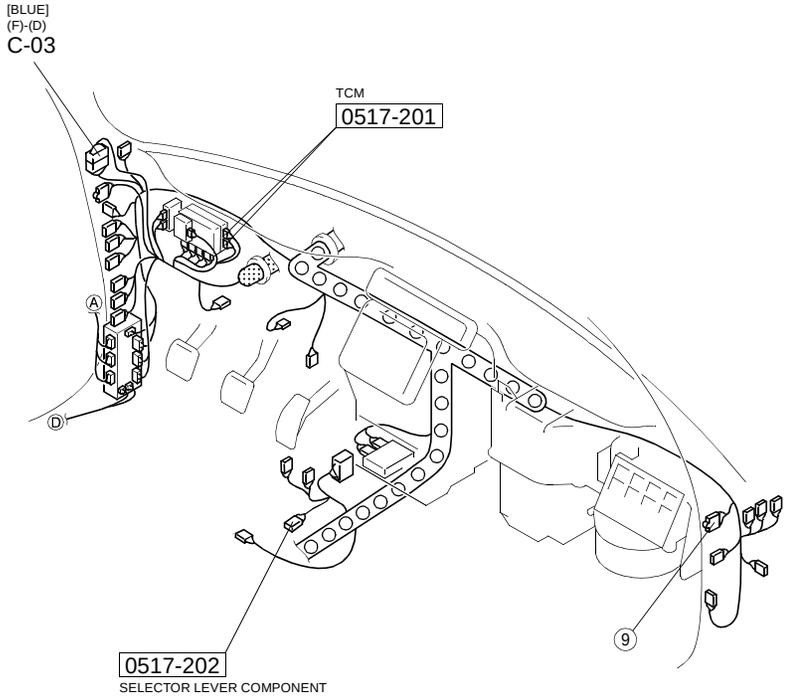

4WD EC-AT CONTROL SYSTEM

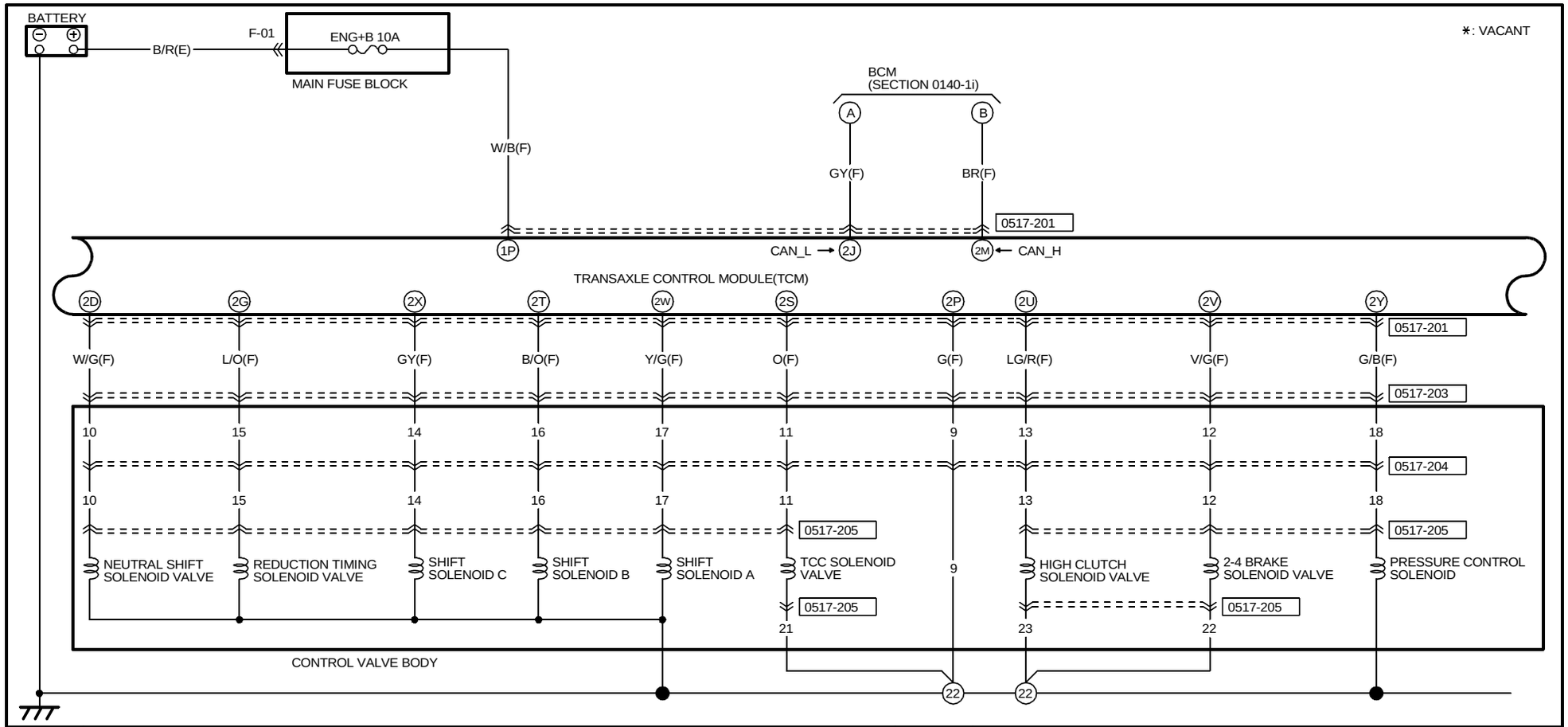

0517-201

TCM(F)

1Y B	1V L	1S L/O	1P W/B	1M G	1J ∗	1G ∗	1D ∗	1A ∗
1Z GY/L	1W R/Y	1T G/W	1Q ∗	1N O	1K W	1H ∗	1E ∗	1B R/G
1AA L/R	1X R	1U G/Y				1I ∗	1F V/R	1C B

1Y — 1C

2Y G/B	2V V/G	2S O	2P G	2M BR	2J GY	2G L/O	2D W/G	2A ∗
2Z G/W	2W Y/G	2T B/O	2Q ∗	2N ∗	2K ∗	2H ∗	2E ∗	2B P/L
2AA G/W	2X GY	2U LG/R				2I ∗	2F W	2C L/B

2Z — 2AA

0517-203

FRONT(F)-TERMINAL COMPONENT NO.1(SHORT CORD)

(F)

V/G	G/B	B/O	G
O	L/O	W/G	∗
LG/R	GY	Y/G	∗

(TERMINAL COMPONENT NO.1)

9	16	18	12
∗	10	15	11
∗	17	14	13

TERMINALS OF THIS CONNECTOR ARE INDICATED BY NUMBERS.

0517-204

TERMINAL COMPONENT NO.1(SHORT CORD)-EC-AT SOLENOID(SHORT CORD)

(TERMINAL COMPONENT NO.1)

9	11			15	17
10	12	13	14	16	18

(EC-AT SOLENOID)

17	15			11	9
18	16	14	13	12	10

TERMINALS OF THIS CONNECTOR ARE INDICATED BY NUMBERS.

0517-205

SOLENOID VALVE(SHORT CORD)

10 14 15 16 17 18

11	12	13
21	22	23

TERMINALS OF THIS CONNECTOR ARE INDICATED BY NUMBERS.

HARNESS SYMBOL : (F) (E) (D) (R)

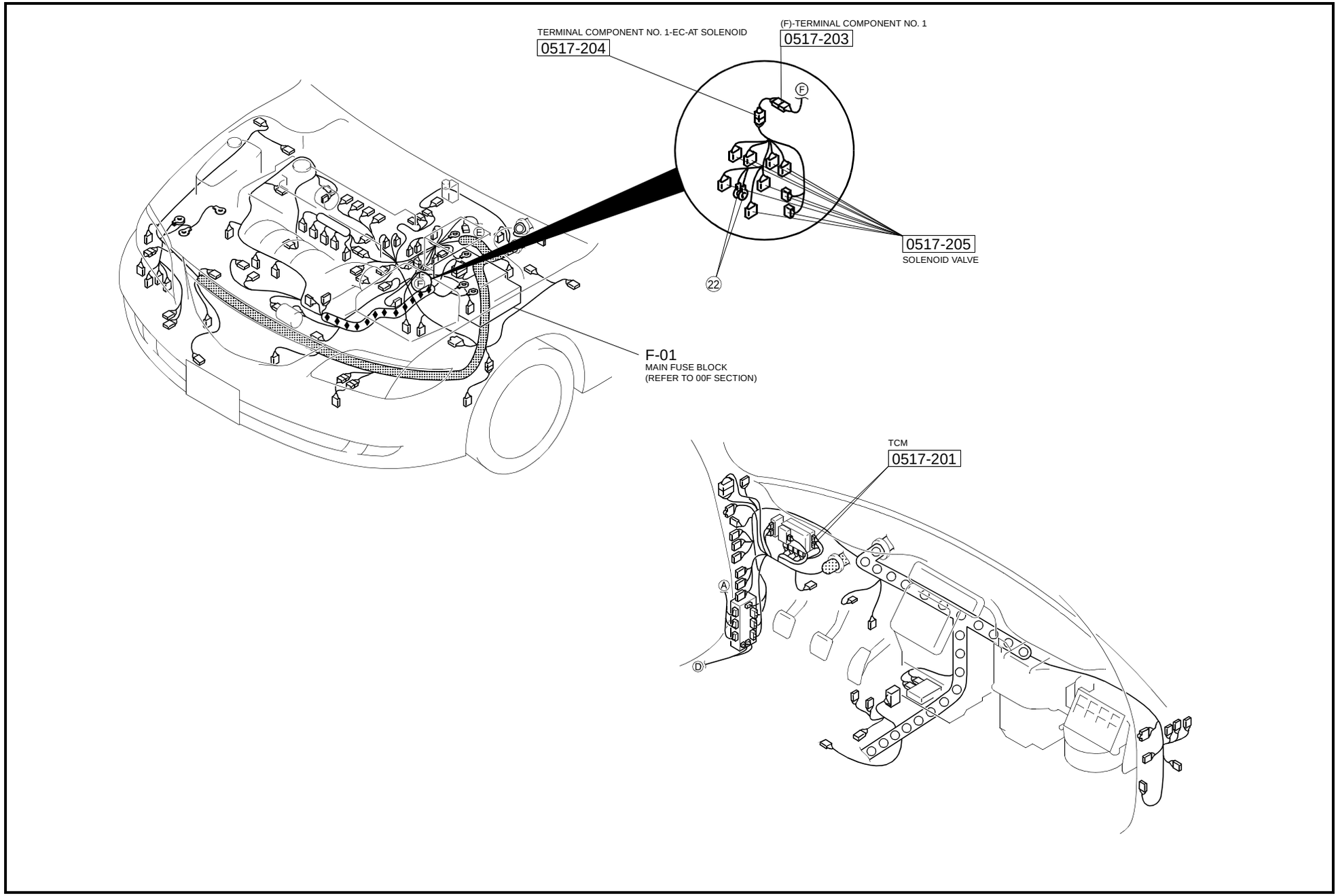

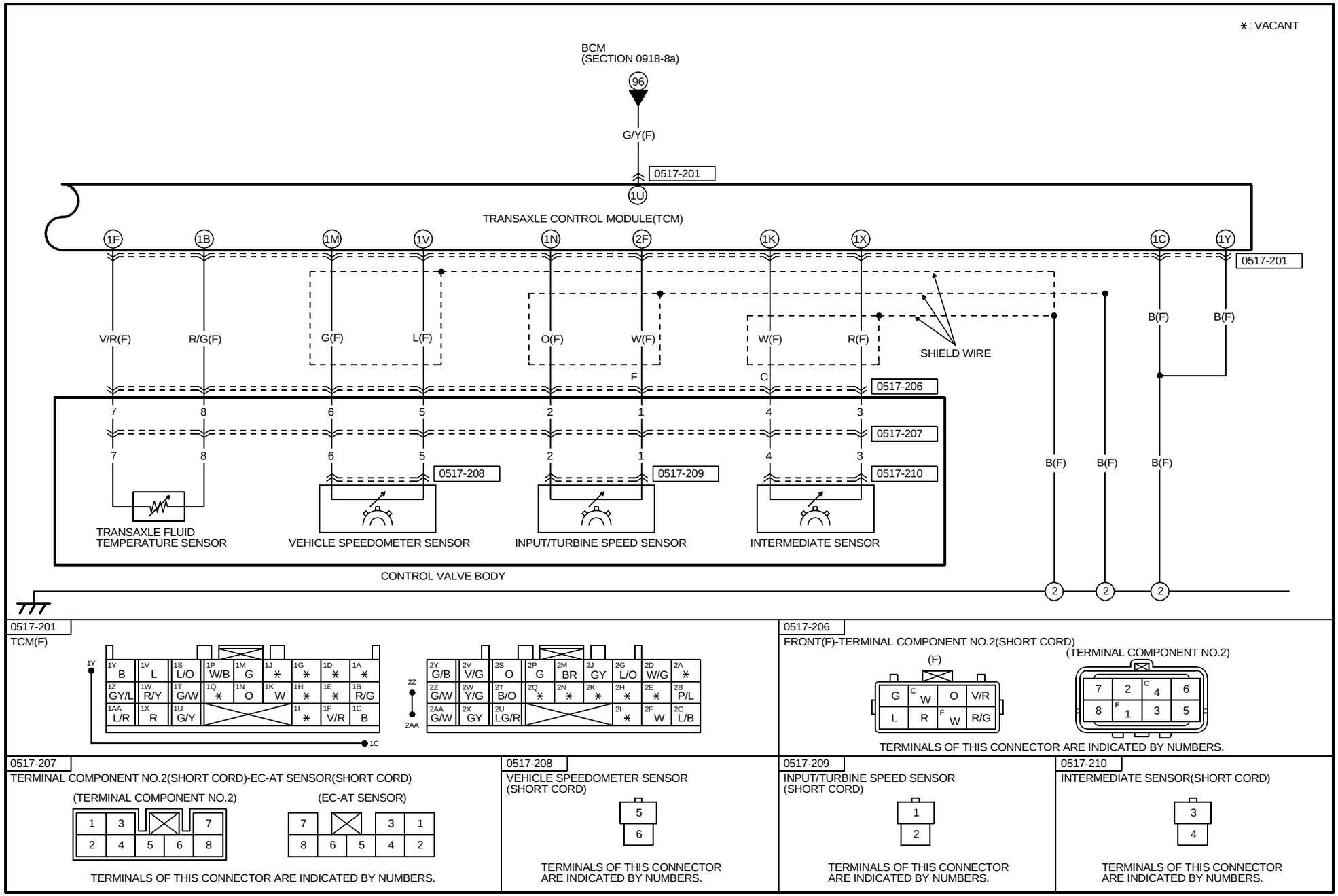
∗: VACANT
BCM
(SECTION 0918-8a)
96
G/Y(F)
0517-201
1U
TRANSAXLE CONTROL MODULE(TCM)
1F
1B
1M
1V
1N
2F
1K
1X
1C
1Y
0517-201
V/R(F)
R/G(F)
G(F)
L(F)
O(F)
W(F)
W(F)
R(F)
B(F)
B(F)
SHIELD WIRE
F
C
0517-206
7
8
6
5
2
1
4
3
0517-207
0517-208
0517-209
0517-210
B(F)
B(F)
B(F)
TRANSAXLE FLUID
TEMPERATURE SENSOR
VEHICLE SPEEDOMETER SENSOR
INPUT/TURBINE SPEED SENSOR
INTERMEDIATE SENSOR
CONTROL VALVE BODY
2
2
2
0517-201
TCM(F)
1Y
1Z GY/L
1AA L/R
1V L
1W R/Y
1X R
1S L/O
1T G/W
1U G/Y
1P W/B
1Q ∗
1M G
1N O
1J ∗
1K W
1G ∗
1H ∗
1D ∗
1E ∗
1A ∗
1B R/G
1I ∗
1F V/R
1C B
1C
2Z
2AA
2Y G/B
2AA G/W
2V V/G
2W Y/G
2X GY
2S O
2T B/O
2U LG/R
2P G
2Q ∗
2M BR
2N ∗
2K ∗
2J GY
2H ∗
2G L/O
2I ∗
2D W/G
2E ∗
2F W
2A ∗
2B P/L
2C L/B
0517-206
FRONT(F)-TERMINAL COMPONENT NO.2(SHORT CORD)
(F)
(TERMINAL COMPONENT NO.2)
G
C W
O
V/R
L
R
F W
R/G
7
2
C 4
6
8
F 1
3
5
TERMINALS OF THIS CONNECTOR ARE INDICATED BY NUMBERS.
0517-207
TERMINAL COMPONENT NO.2(SHORT CORD)-EC-AT SENSOR(SHORT CORD)
(TERMINAL COMPONENT NO.2)
(EC-AT SENSOR)
1 3 7
2 4 5 6 8
7 3 1
8 6 5 4 2
TERMINALS OF THIS CONNECTOR ARE INDICATED BY NUMBERS.
0517-208
VEHICLE SPEEDOMETER SENSOR
(SHORT CORD)
5
6
TERMINALS OF THIS CONNECTOR
ARE INDICATED BY NUMBERS.
0517-209
INPUT/TURBINE SPEED SENSOR
(SHORT CORD)
1
2
TERMINALS OF THIS CONNECTOR
ARE INDICATED BY NUMBERS.
0517-210
INTERMEDIATE SENSOR(SHORT CORD)
3
4
TERMINALS OF THIS CONNECTOR
ARE INDICATED BY NUMBERS.

HARNESS SYMBOL : (F) (E) (D) (R)

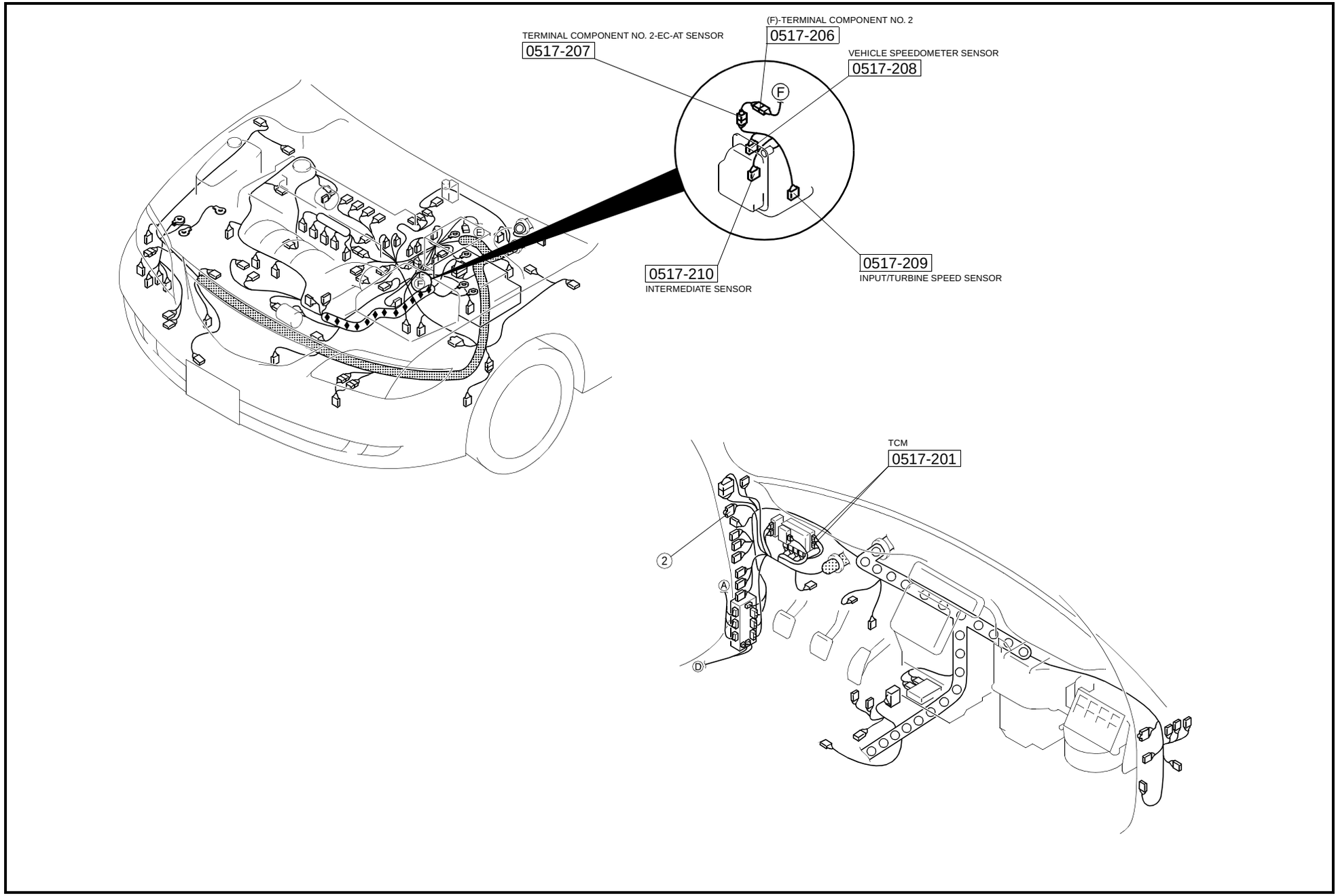

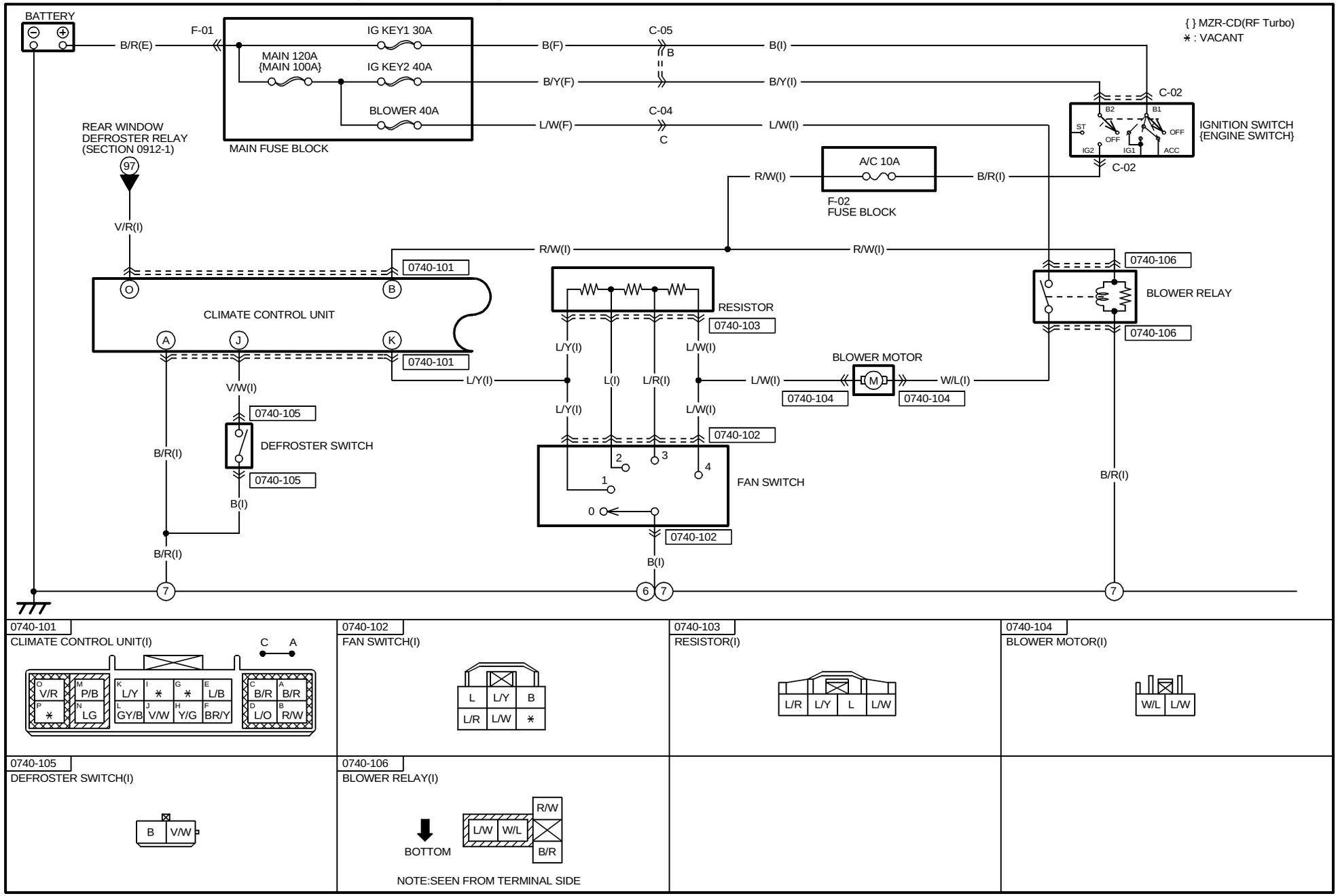

0740-101
CLIMATE CONTROL UNIT(I)

0740-102
FAN SWITCH(I)

0740-103
RESISTOR(I)

0740-104
BLOWER MOTOR(I)

0740-105
DEFROSTER SWITCH(I)

0740-106
BLOWER RELAY(I)

NOTE:SEEN FROM TERMINAL SIDE

HARNESS SYMBOL : (F) (E) (D) (R)

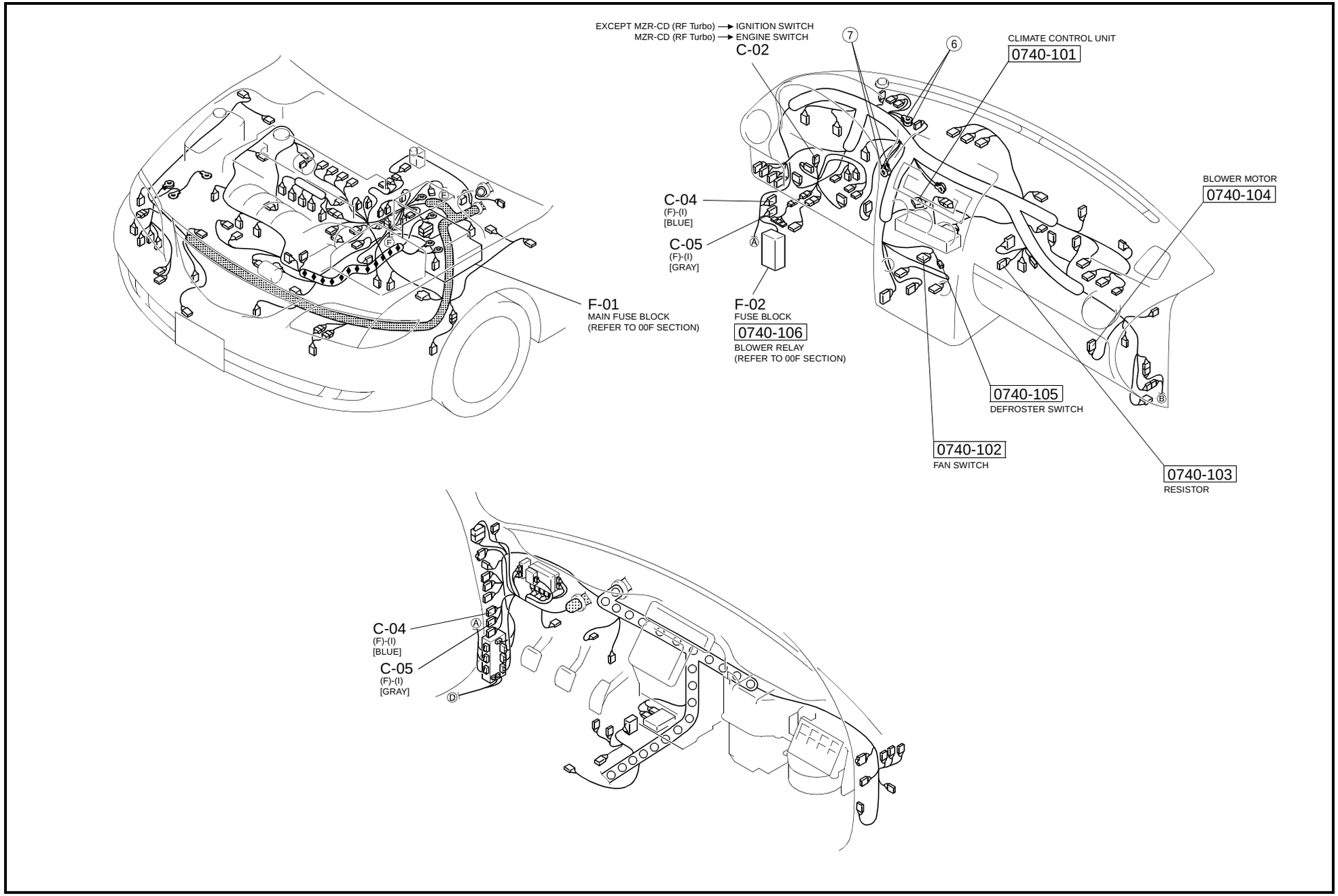

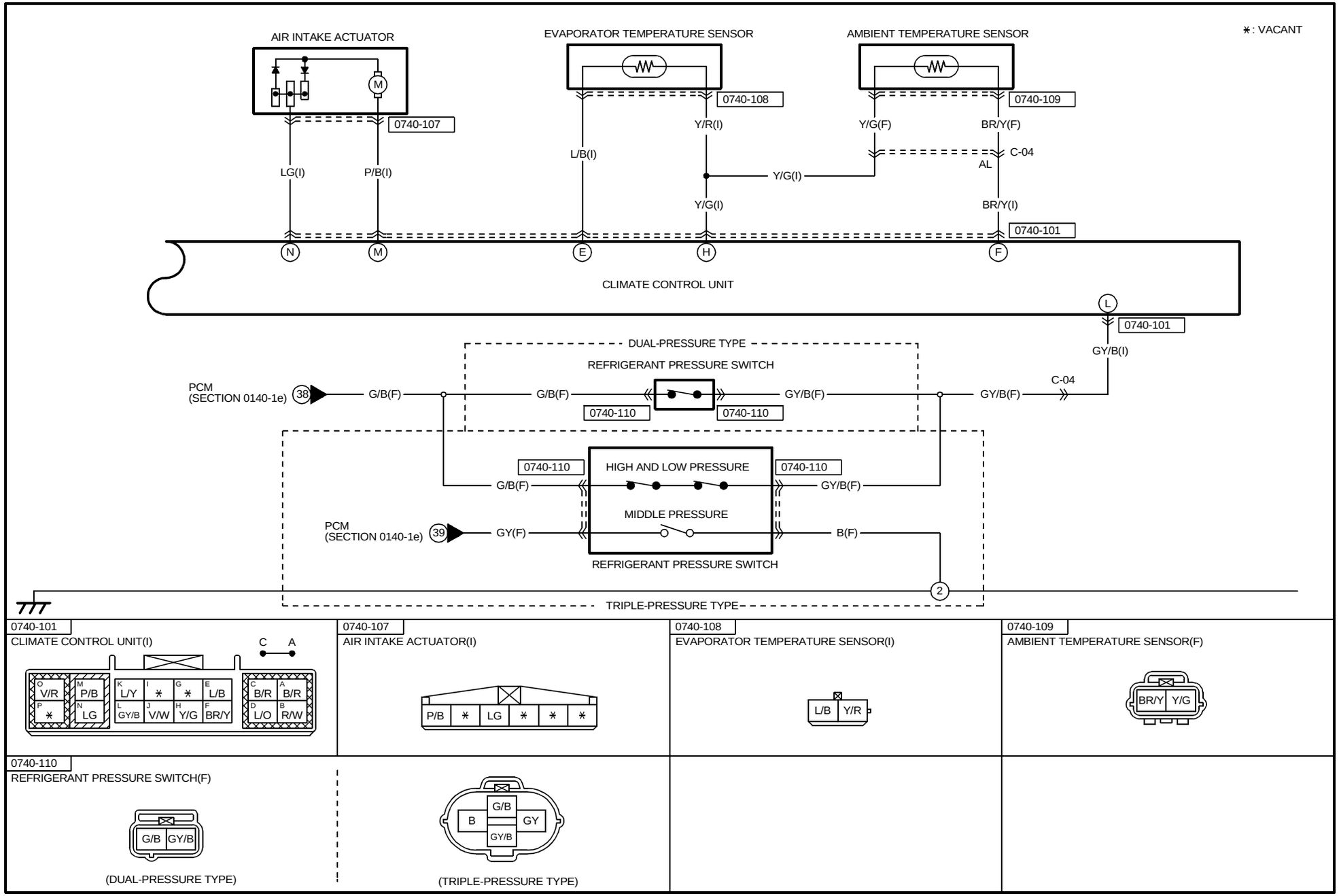
∗: VACANT
AIR INTAKE ACTUATOR
M
0740-107
LG(I)
P/B(I)
EVAPORATOR TEMPERATURE SENSOR
0740-108
L/B(I)
Y/R(I)
Y/G(I)
AMBIENT TEMPERATURE SENSOR
0740-109
Y/G(F)
BR/Y(F)
C-04
AL
BR/Y(I)
0740-101
N
M
E
H
F
CLIMATE CONTROL UNIT
L
0740-101
GY/B(I)
C-04
DUAL-PRESSURE TYPE
REFRIGERANT PRESSURE SWITCH
PCM
(SECTION 0140-1e)
38
G/B(F)
G/B(F)
0740-110
0740-110
GY/B(F)
GY/B(F)
0740-110
HIGH AND LOW PRESSURE
0740-110
G/B(F)
GY/B(F)
MIDDLE PRESSURE
PCM
(SECTION 0140-1e)
39
GY(F)
B(F)
REFRIGERANT PRESSURE SWITCH
2
TRIPLE-PRESSURE TYPE
0740-101
CLIMATE CONTROL UNIT(I)
C A
O V/R
M P/B
K L/Y
I ∗
G ∗
E L/B
C B/R
A B/R
P ∗
N LG
L GY/B
J V/W
H Y/G
F BR/Y
D L/O
B R/W
0740-107
AIR INTAKE ACTUATOR(I)
P/B ∗ LG ∗ ∗ ∗
0740-108
EVAPORATOR TEMPERATURE SENSOR(I)
L/B Y/R
0740-109
AMBIENT TEMPERATURE SENSOR(F)
BR/Y Y/G
0740-110
REFRIGERANT PRESSURE SWITCH(F)
G/B GY/B
(DUAL-PRESSURE TYPE)
G/B
B GY
GY/B
(TRIPLE-PRESSURE TYPE)

HARNESS SYMBOL : (F) (E) (D) (R)

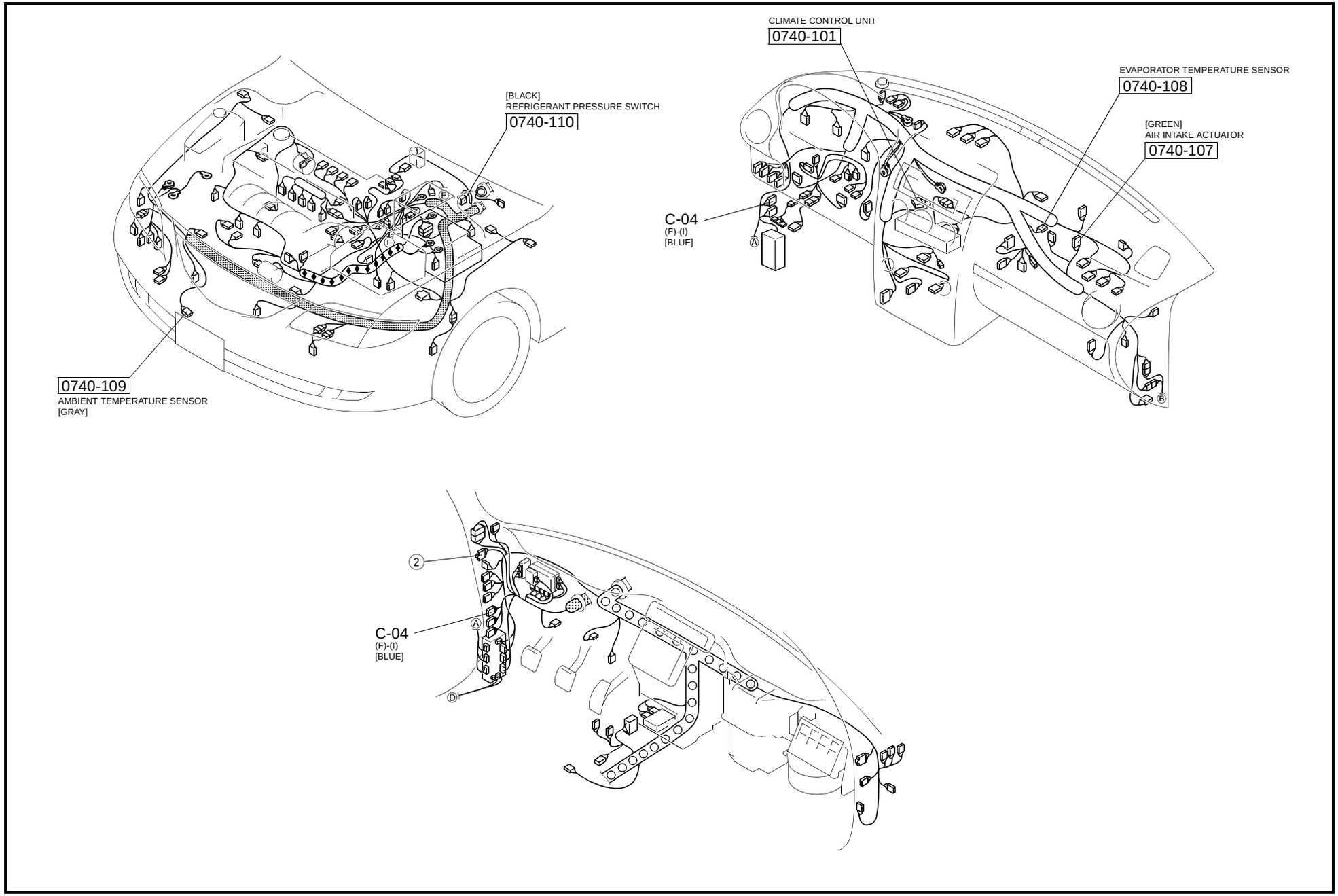

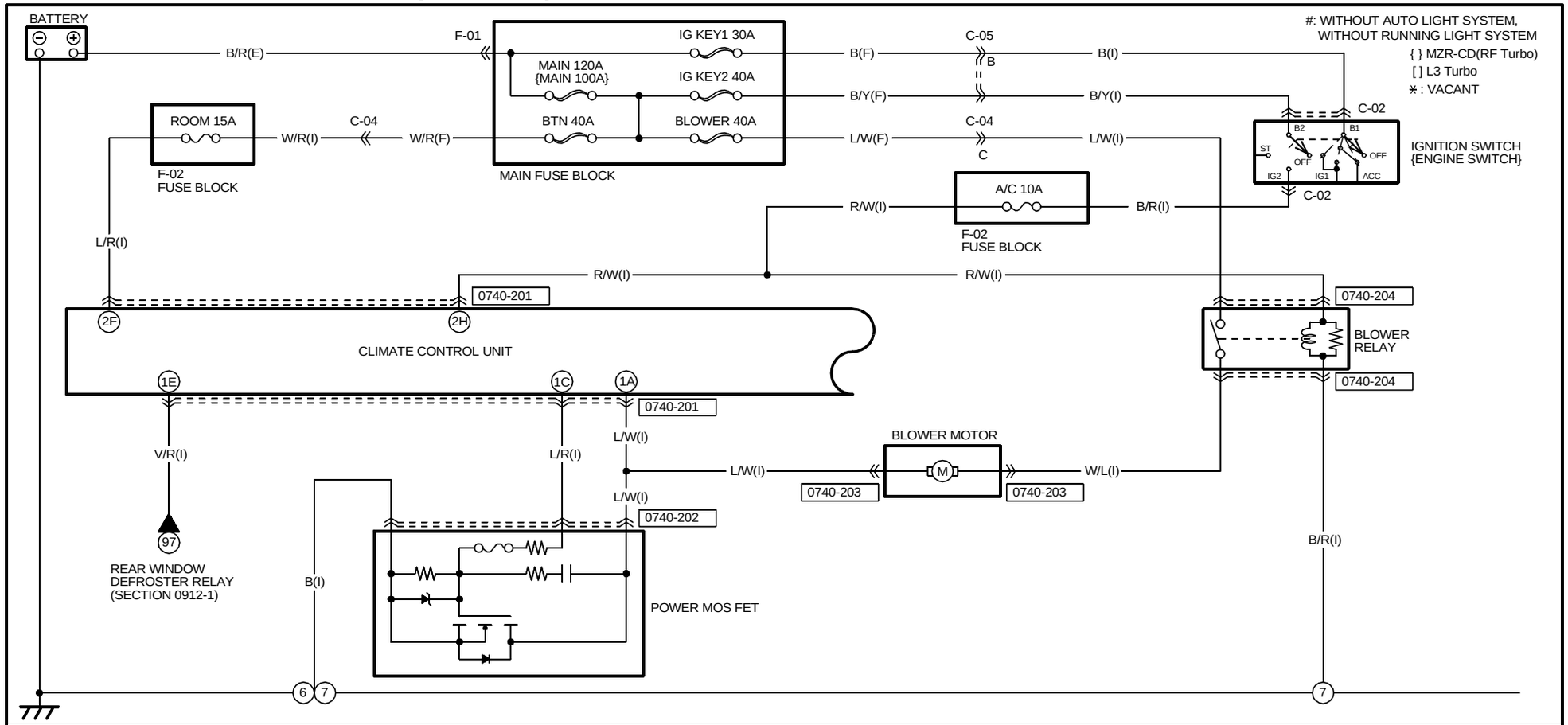

0740-201

CLIMATE CONTROL UNIT(I)

1W W/R	1U W/L	1S LG/R	1Q L/B	1O G/W	1M Y/B	1K BR/Y	1I Y	1G ∗	1E V/R	1C L/R	1A L/W
1X L/O	1V ∗	1T B/R	1R ∗	1P GY/B	1N ∗	1L ∗	1J ∗	1H ∗	1F V/Y	1D ∗	1B V

2K LG	2I P/B	2G B/W	2E L	2C BR/R	2A B/Y
2L B/L	2J ∗	2H R/W	2F L/R	2D Y	2B B/LG

#LG/R

[B/R]

0740-202

POWER MOS FET(I)

L/R	∗	B
∗	∗	L/W

0740-203

BLOWER MOTOR(I)

W/L	L/W

0740-204

BLOWER RELAY(I)

BOTTOM

		R/W
L/W	W/L	
		B/R

NOTE:SEEN FROM TERMINAL SIDE

HARNESS SYMBOL : (F) (E) (D) (R)

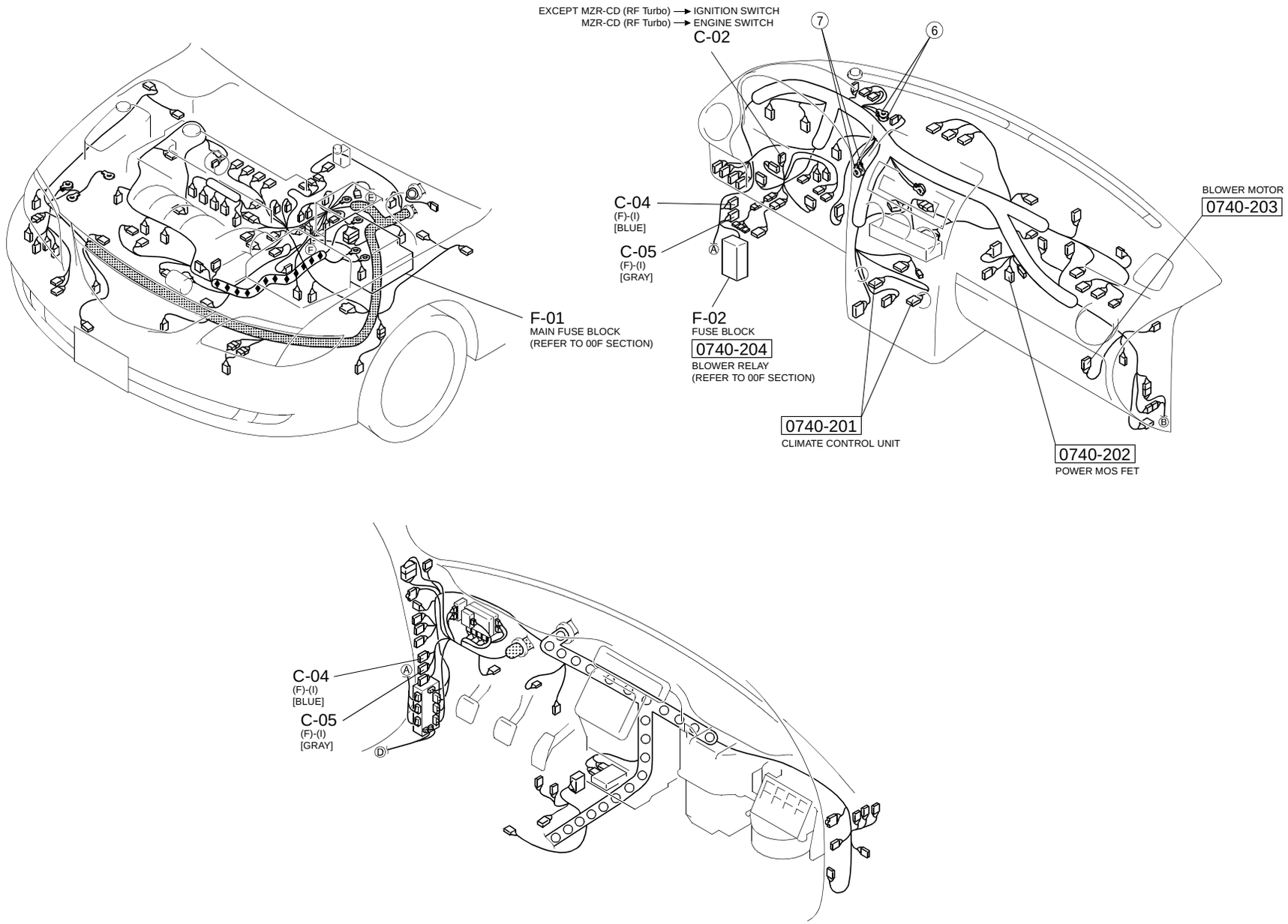

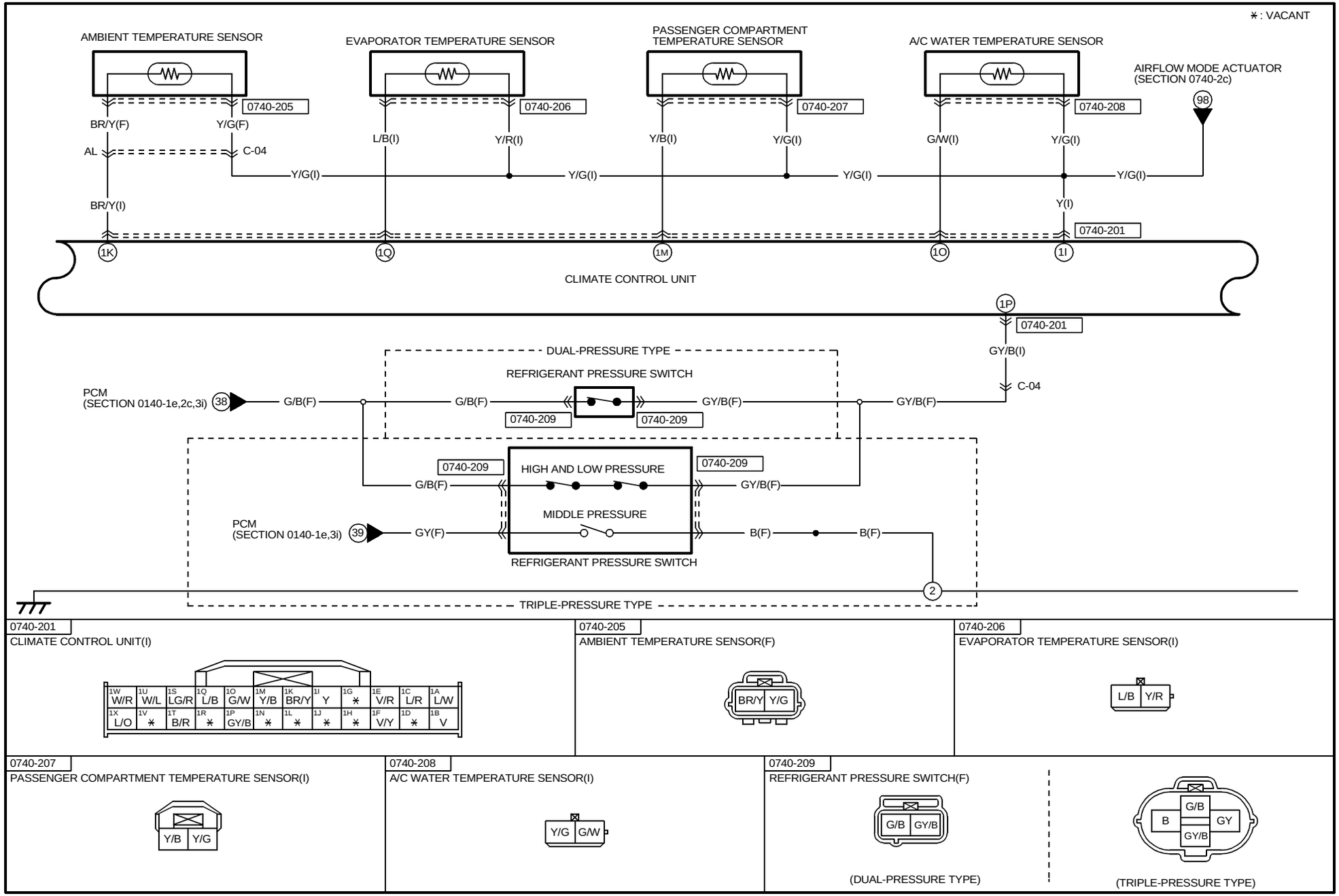
∗ : VACANT
AMBIENT TEMPERATURE SENSOR
EVAPORATOR TEMPERATURE SENSOR
PASSENGER COMPARTMENT TEMPERATURE SENSOR
A/C WATER TEMPERATURE SENSOR
AIRFLOW MODE ACTUATOR (SECTION 0740-2c)
0740-205
0740-206
0740-207
0740-208
98
BR/Y(F)
Y/G(F)
L/B(I)
Y/R(I)
Y/B(I)
Y/G(I)
G/W(I)
Y/G(I)
AL
C-04
Y/G(I)
Y/G(I)
Y/G(I)
Y/G(I)
BR/Y(I)
Y(I)
0740-201
1K
1Q
1M
1O
1I
CLIMATE CONTROL UNIT
1P
0740-201
GY/B(I)
C-04
DUAL-PRESSURE TYPE
REFRIGERANT PRESSURE SWITCH
PCM (SECTION 0140-1e,2c,3i)
38
G/B(F)
G/B(F)
GY/B(F)
GY/B(F)
0740-209
0740-209
0740-209
HIGH AND LOW PRESSURE
0740-209
G/B(F)
GY/B(F)
MIDDLE PRESSURE
PCM (SECTION 0140-1e,3i)
39
GY(F)
B(F)
B(F)
REFRIGERANT PRESSURE SWITCH
2
TRIPLE-PRESSURE TYPE
0740-201
CLIMATE CONTROL UNIT(I)
1W W/R
1U W/L
1S LG/R
1Q L/B
1O G/W
1M Y/B
1K BR/Y
1I Y
1G ∗
1E V/R
1C L/R
1A L/W
1X L/O
1V ∗
1T B/R
1R ∗
1P GY/B
1N ∗
1L ∗
1J ∗
1H ∗
1F V/Y
1D ∗
1B V
0740-205
AMBIENT TEMPERATURE SENSOR(F)
BR/Y Y/G
0740-206
EVAPORATOR TEMPERATURE SENSOR(I)
L/B Y/R
0740-207
PASSENGER COMPARTMENT TEMPERATURE SENSOR(I)
Y/B Y/G
0740-208
A/C WATER TEMPERATURE SENSOR(I)
Y/G G/W
0740-209
REFRIGERANT PRESSURE SWITCH(F)
G/B GY/B
(DUAL-PRESSURE TYPE)
G/B
B
GY
GY/B
(TRIPLE-PRESSURE TYPE)

HARNESS SYMBOL : (F) (E) (D) (R)

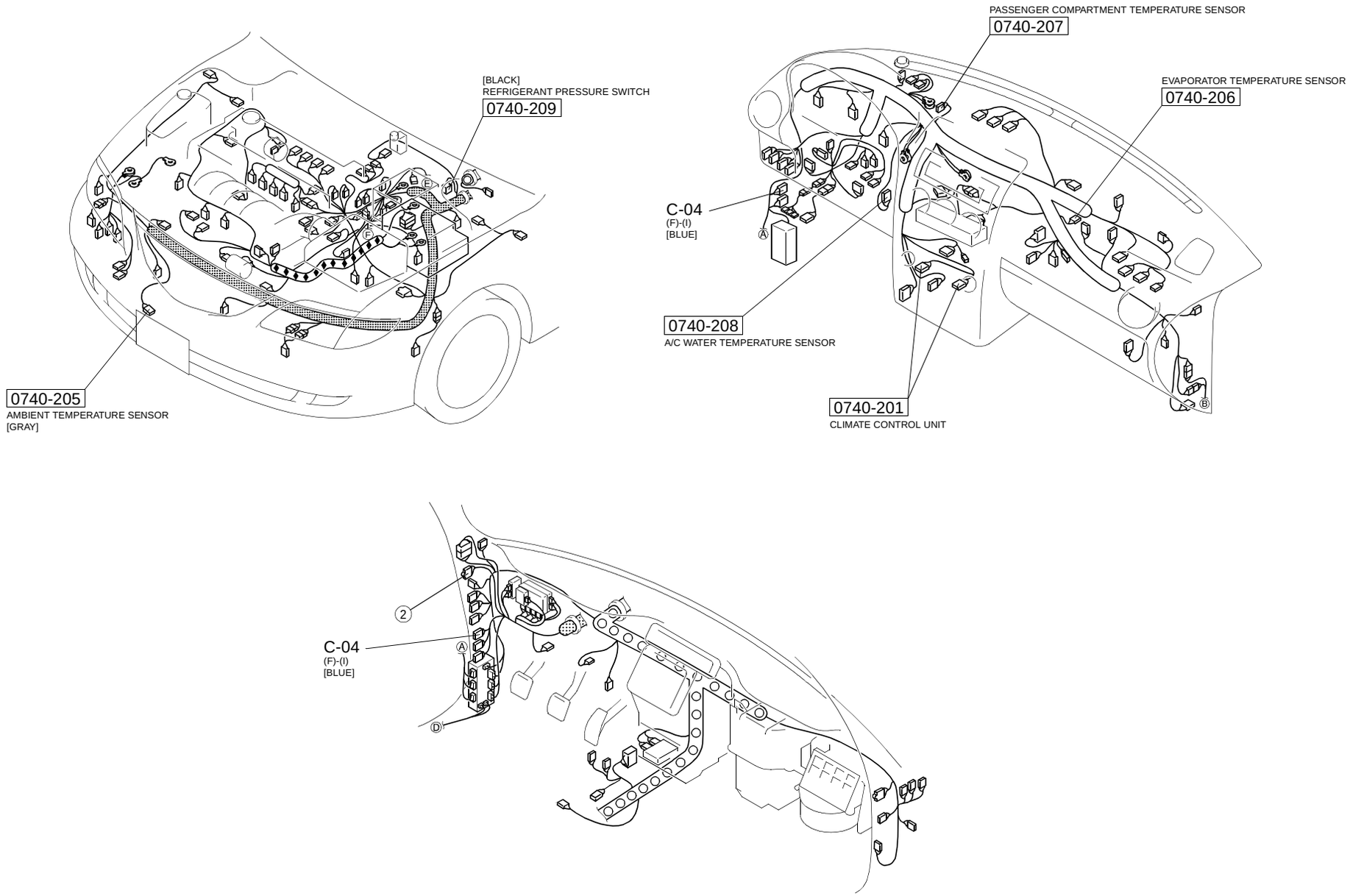

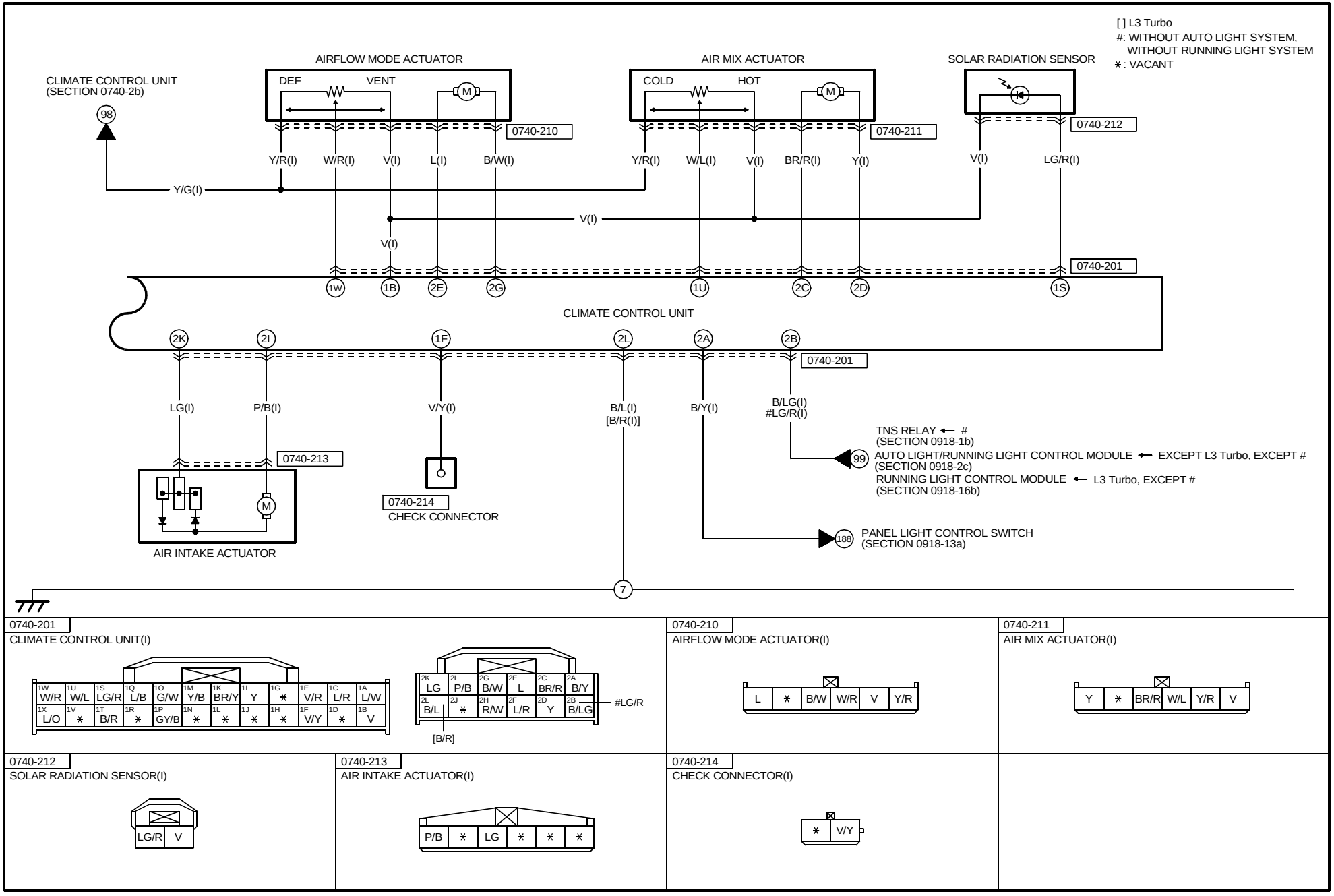

https://www.MyCarManual.com

HARNESS SYMBOL : (F) (E) (D) (R)

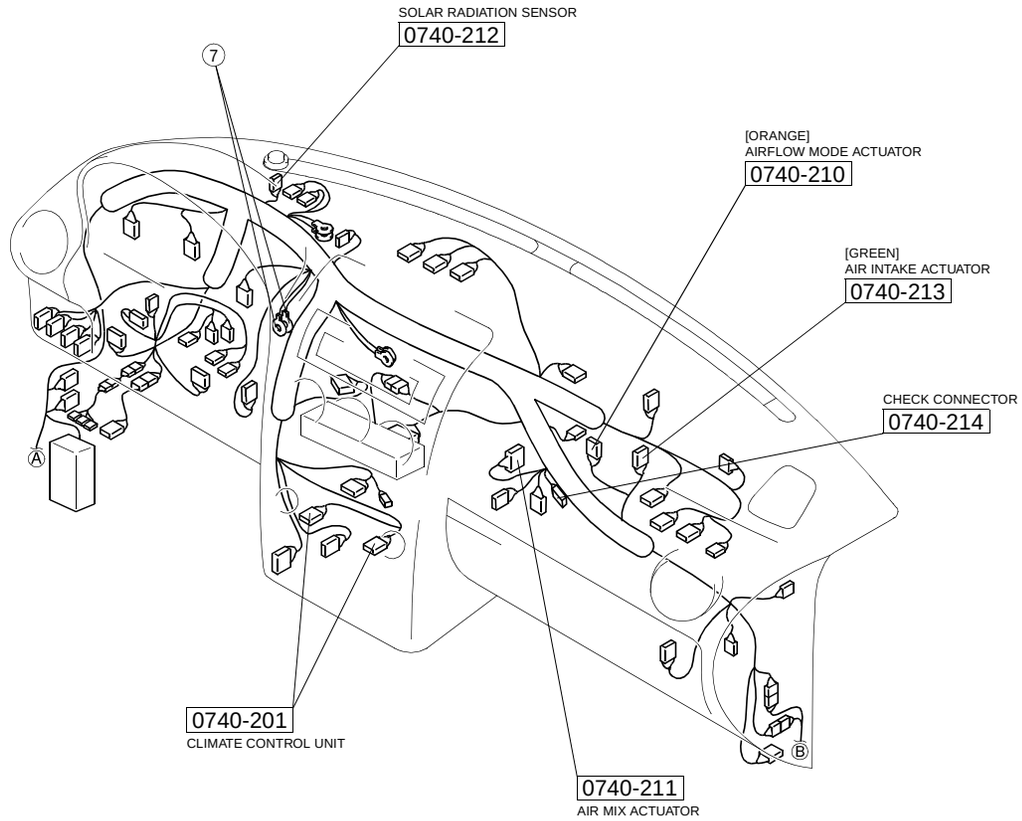

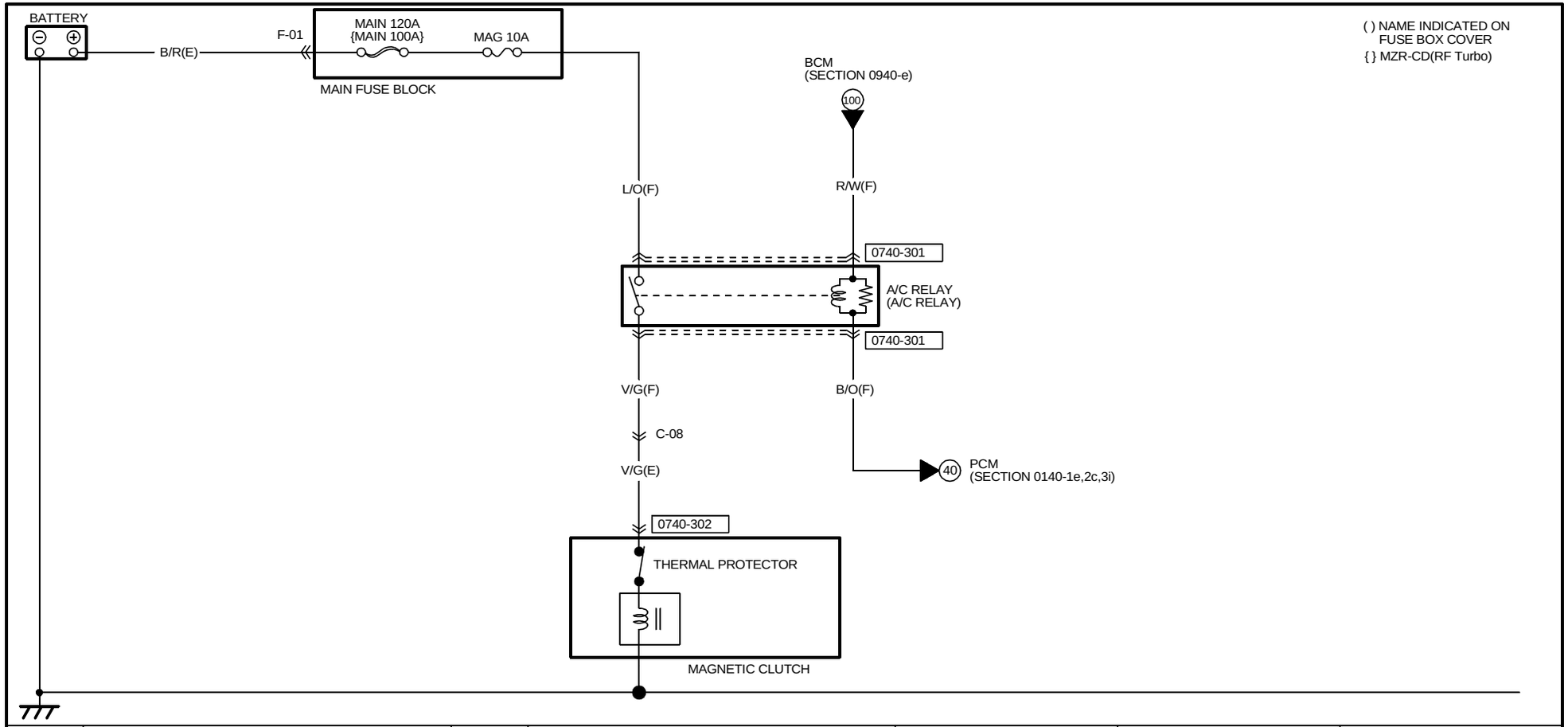

0740-301
A/C RELAY(F)

NOTE:SEEN FROM TERMINAL SIDE

0740-302
MAGNETIC CLUTCH(E)

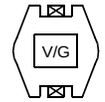

(EXCEPT MZR-CD(RF Turbo))

(MZR-CD(RF Turbo))

HARNESS SYMBOL : (F) (E) (D) (R)

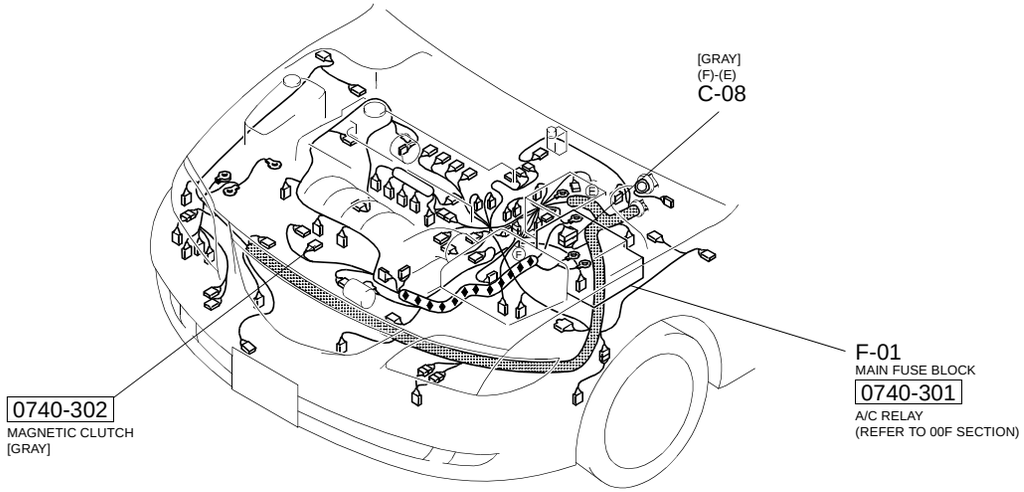

[L3, LF, L8]

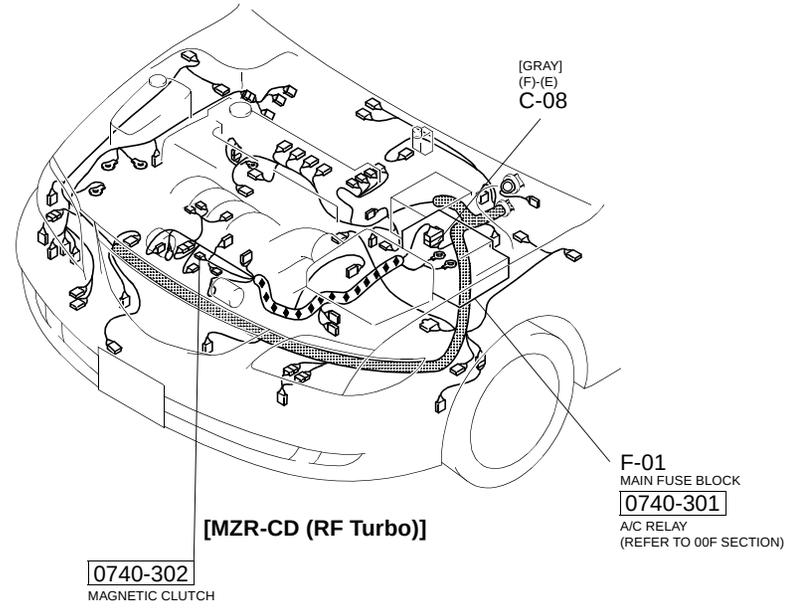

[MZR-CD (RF Turbo)]

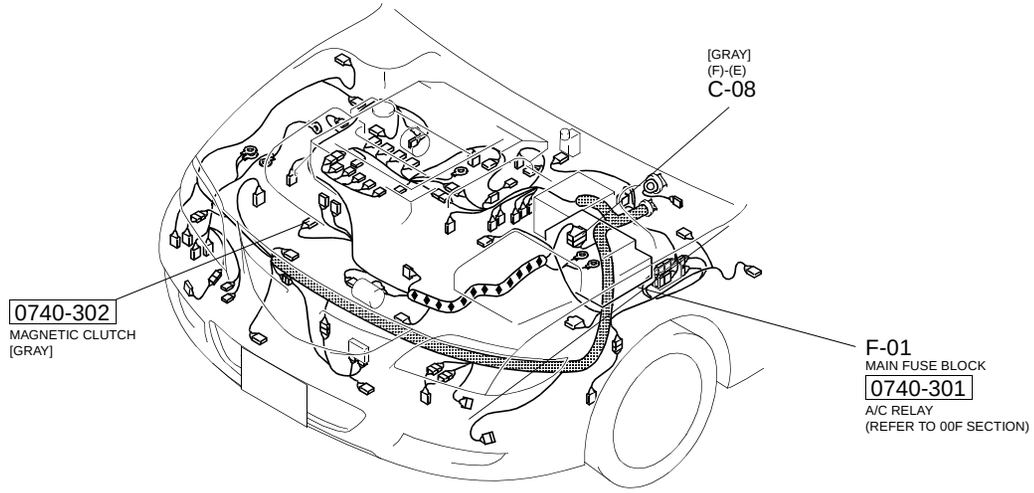

[L3 Turbo]

WATER HEATER SYSTEM

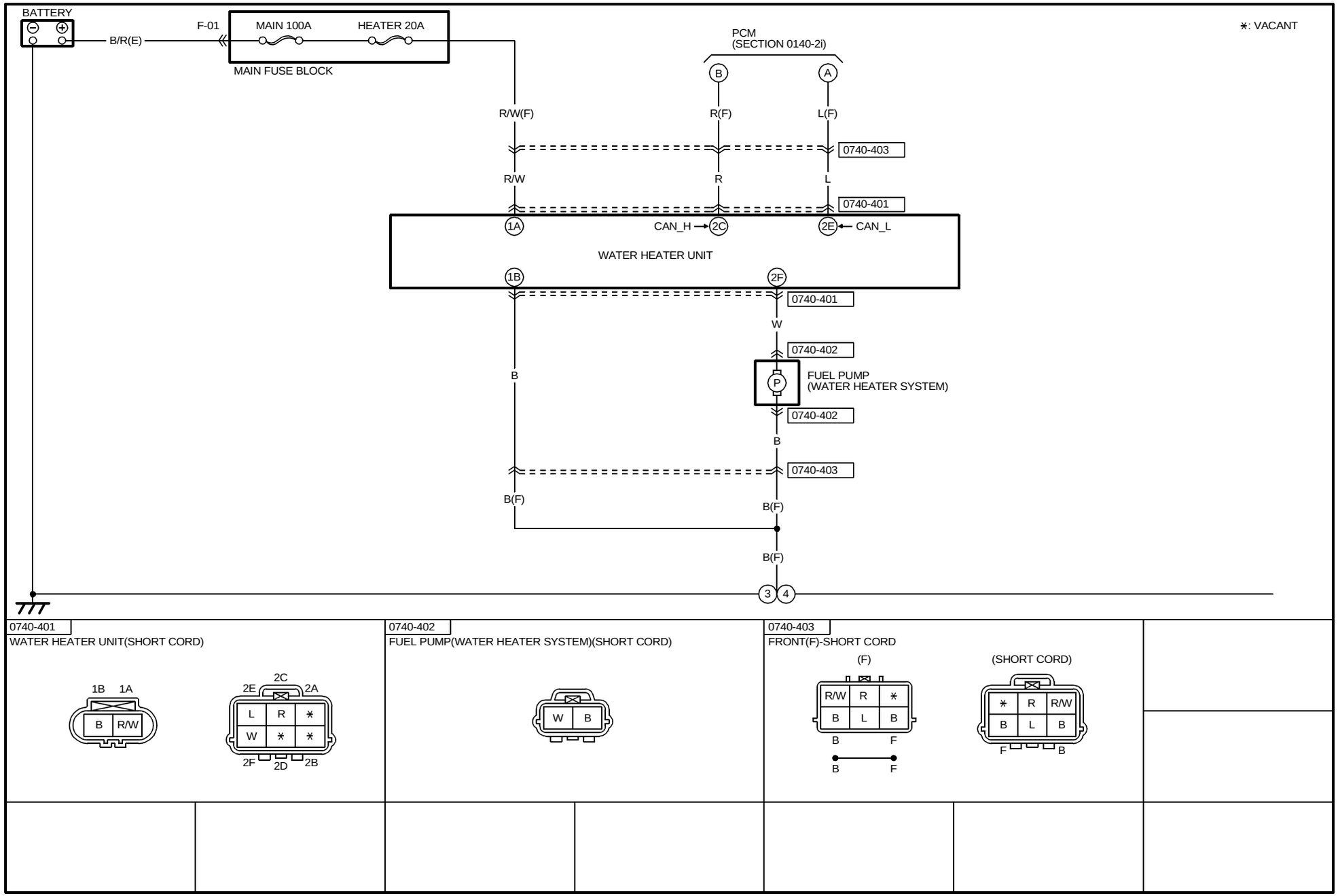

HARNESS SYMBOL : (F) (E) (D) (R)

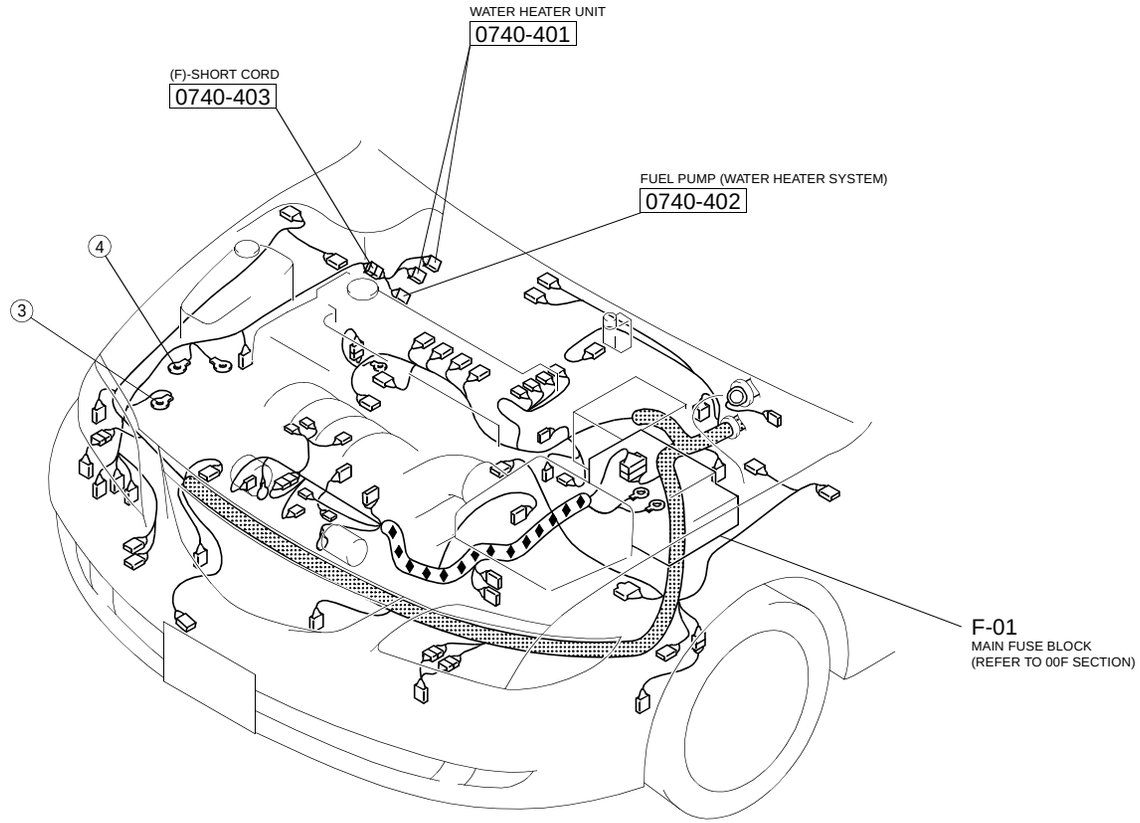

AIR BAG SYSTEM (INCLUDES PRE-TENSIONER SEAT BELT INFORMATION)

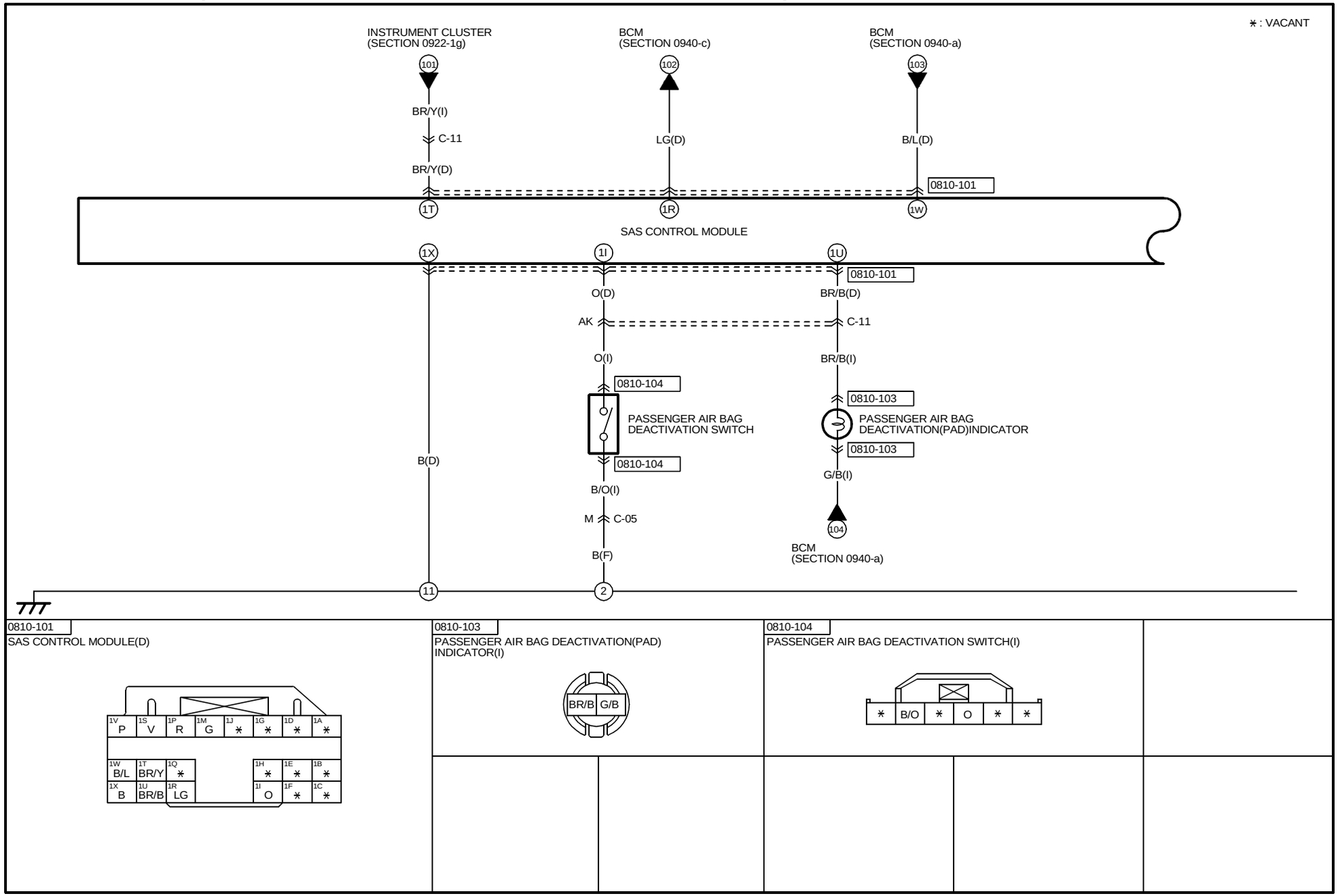

HARNESS SYMBOL : (F) (E) (D) (R)

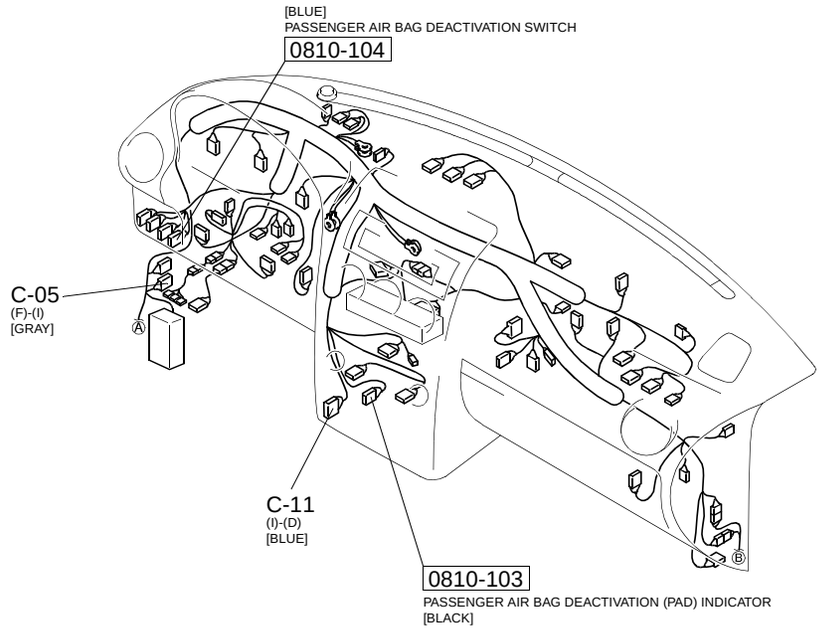

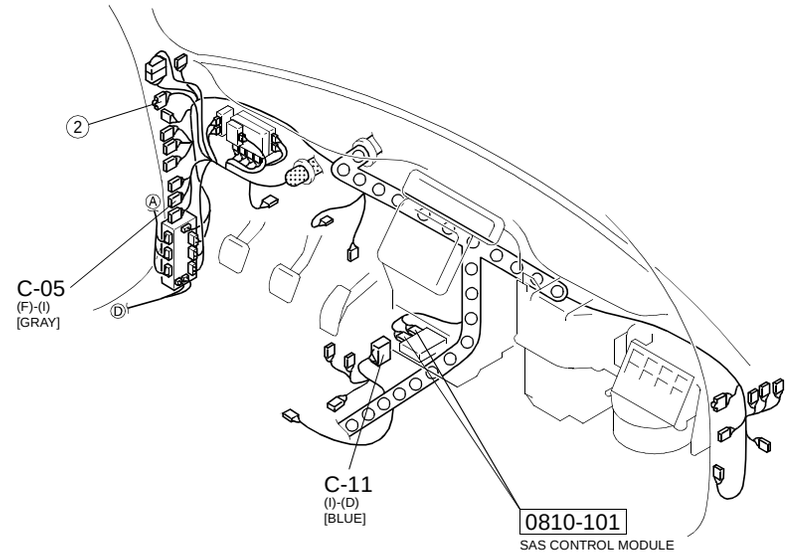

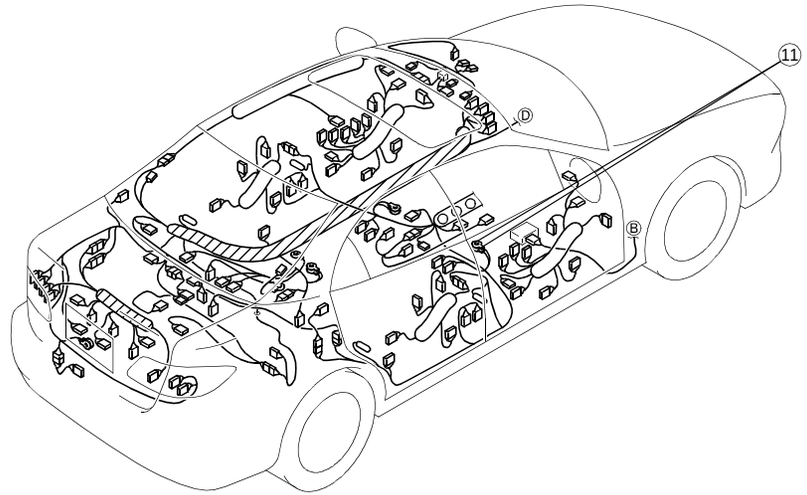

AIR BAG SYSTEM (INCLUDES PRE-TENSIONER SEAT BELT INFORMATION)

*: VACANT

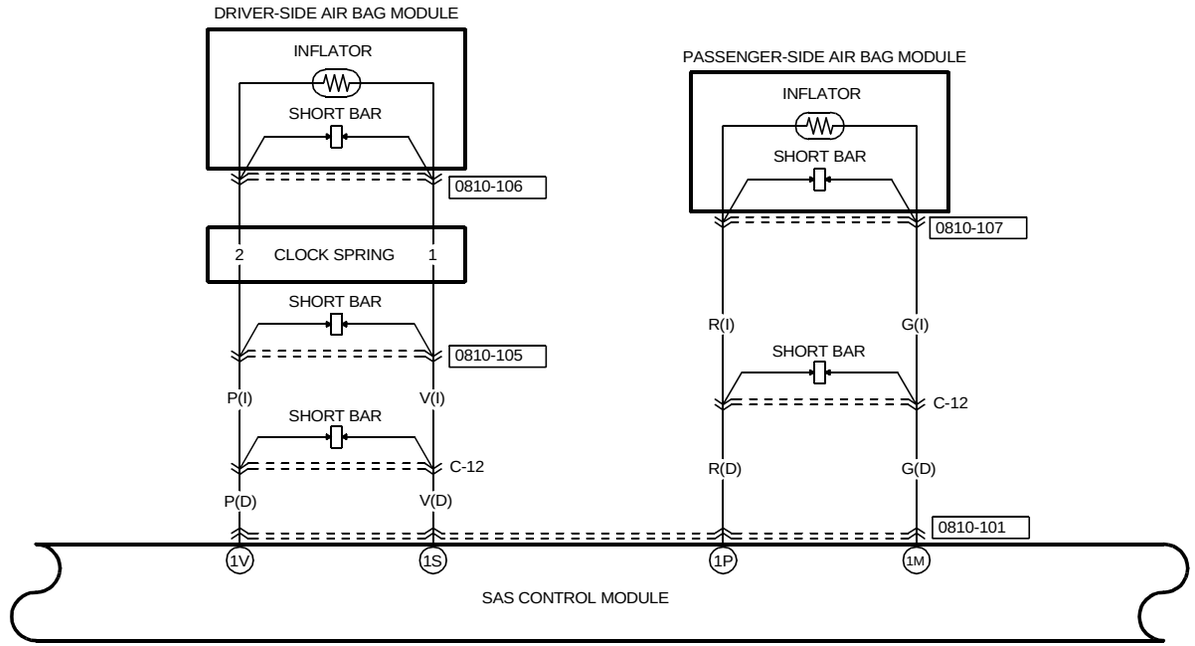

0810-101

SAS CONTROL MODULE(D)

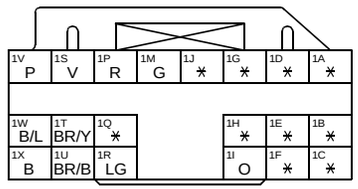

0810-105

INSTRUMENT PANEL(I)-CLOCK SPRING

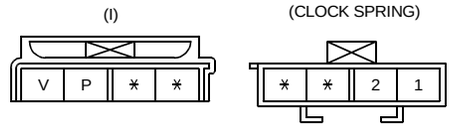

TERMINALS OF THIS CONNECTOR ARE INDICATED BY NUMBERS.

0810-106

DRIVER-SIDE AIR BAG MODULE(CLOCK SPRING)

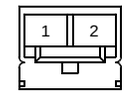

TERMINALS OF THIS CONNECTOR ARE INDICATED BY NUMBERS.

0810-107

PASSENGER-SIDE AIR BAG MODULE(I)

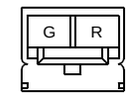

HARNESS SYMBOL : (F) (E) (D) (R)

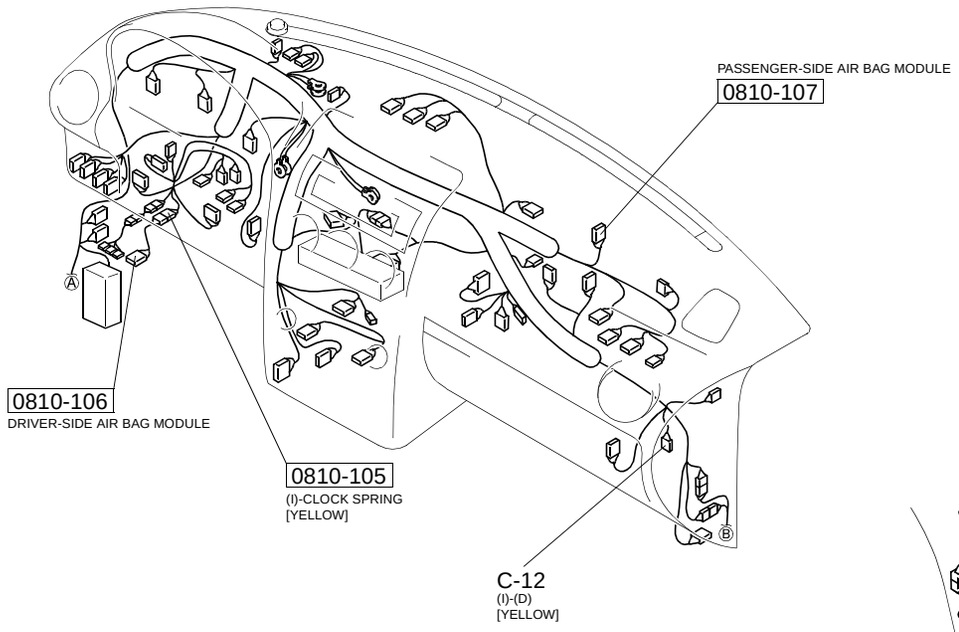

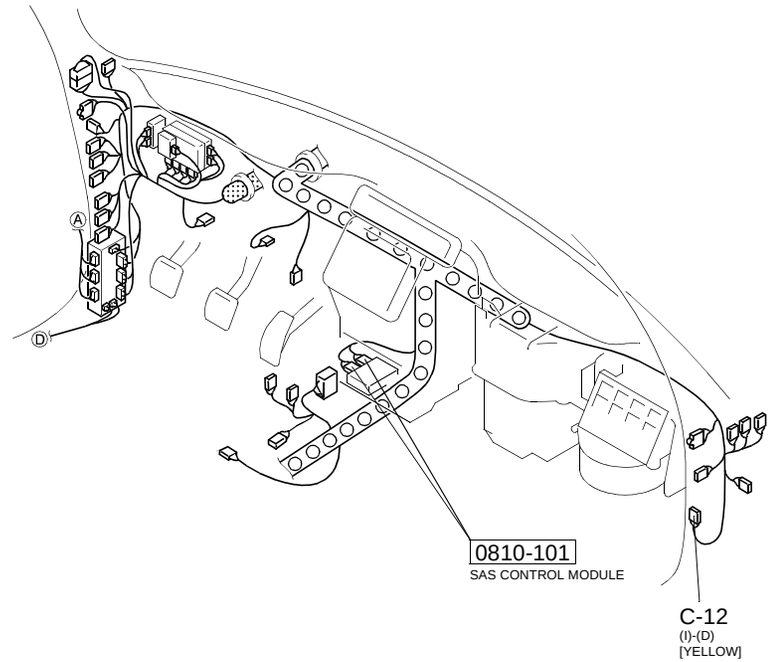

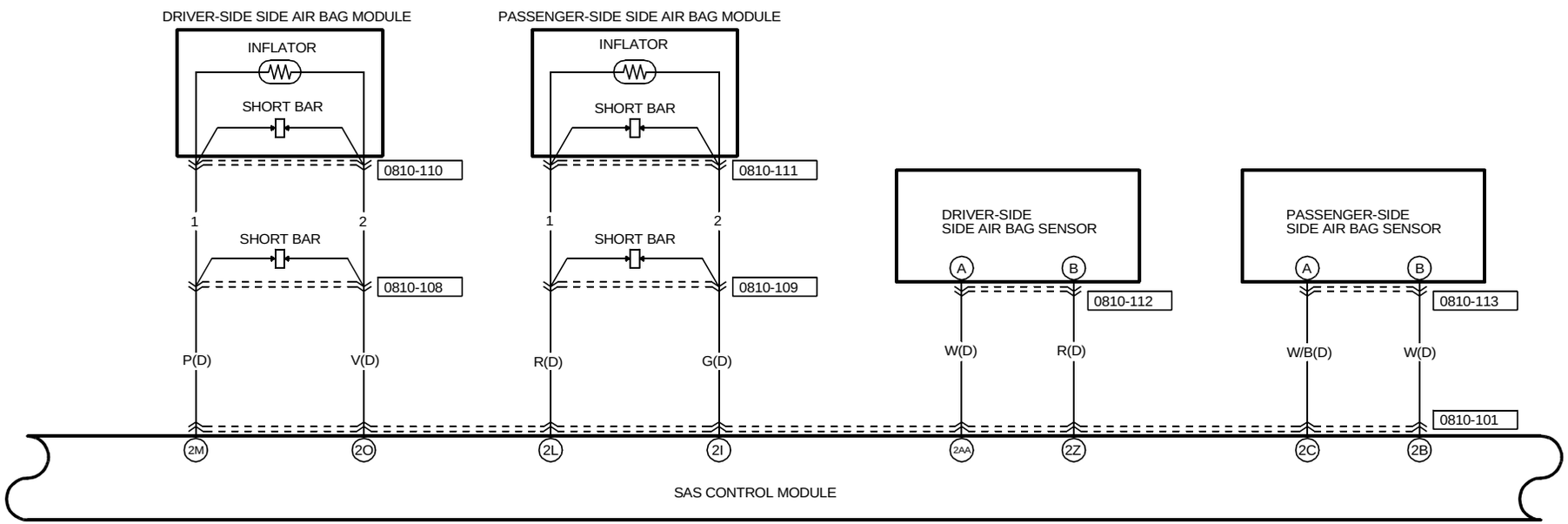

0810-101

SAS CONTROL MODULE(D)

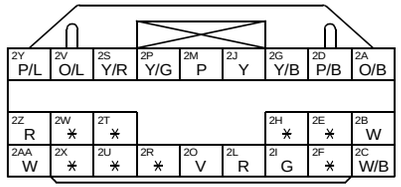

0810-108

DASH(D)-SHORT CORD

TERMINALS OF THIS CONNECTOR ARE INDICATED BY NUMBERS.

0810-109

DASH(D)-SHORT CORD

TERMINALS OF THIS CONNECTOR ARE INDICATED BY NUMBERS.

0810-110

DRIVER-SIDE SIDE AIR BAG MODULE (SHORT CORD)

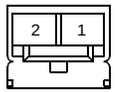

TERMINALS OF THIS CONNECTOR ARE INDICATED BY NUMBERS.

0810-111

PASSENGER-SIDE SIDE AIR BAG MODULE(SHORT CORD)

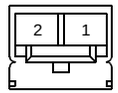

TERMINALS OF THIS CONNECTOR ARE INDICATED BY NUMBERS.

0810-112

DRIVER-SIDE SIDE AIR BAG SENSOR(D)

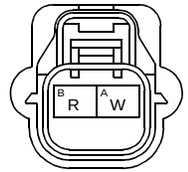

0810-113

PASSENGER-SIDE SIDE AIR BAG SENSOR(D)

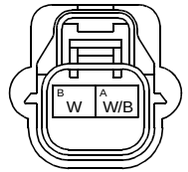

HARNESS SYMBOL : (F) (E) (D) (R)

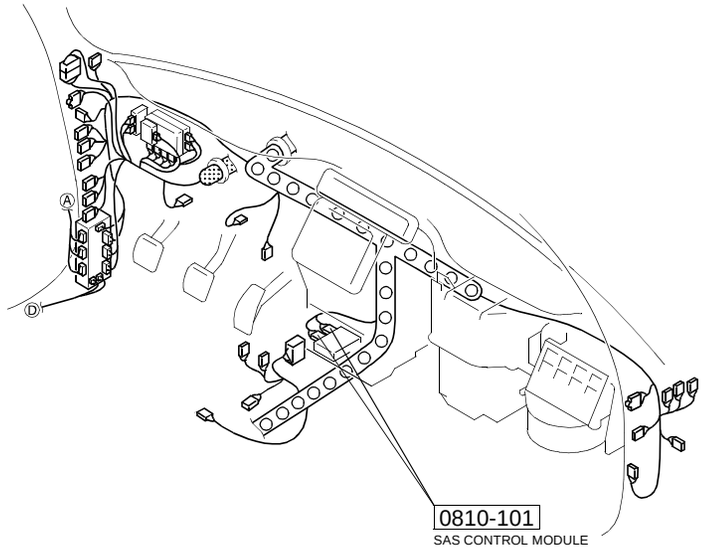

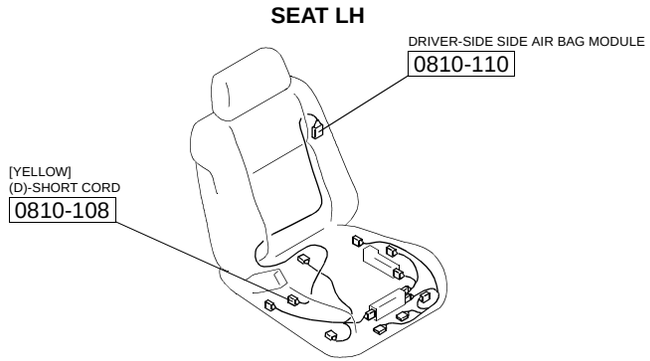

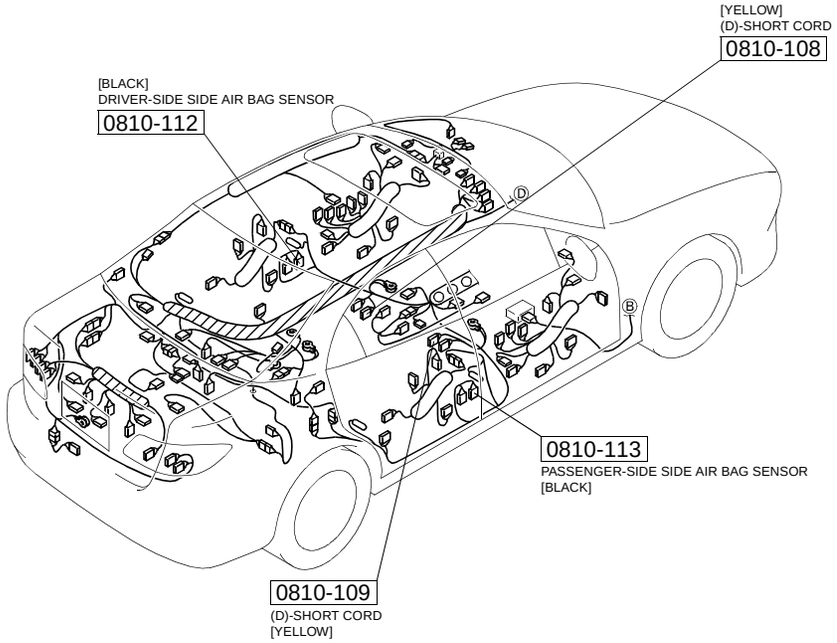

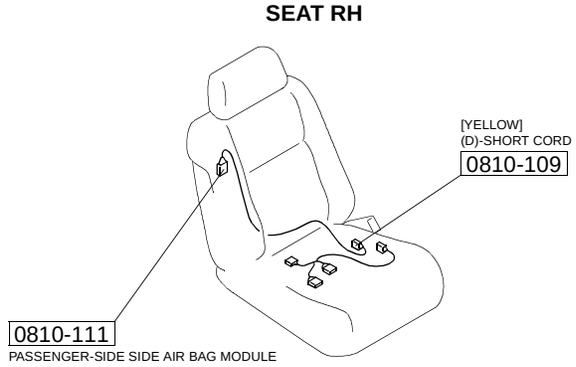

AIR BAG SYSTEM (INCLUDES PRE-TENSIONER SEAT BELT INFORMATION)

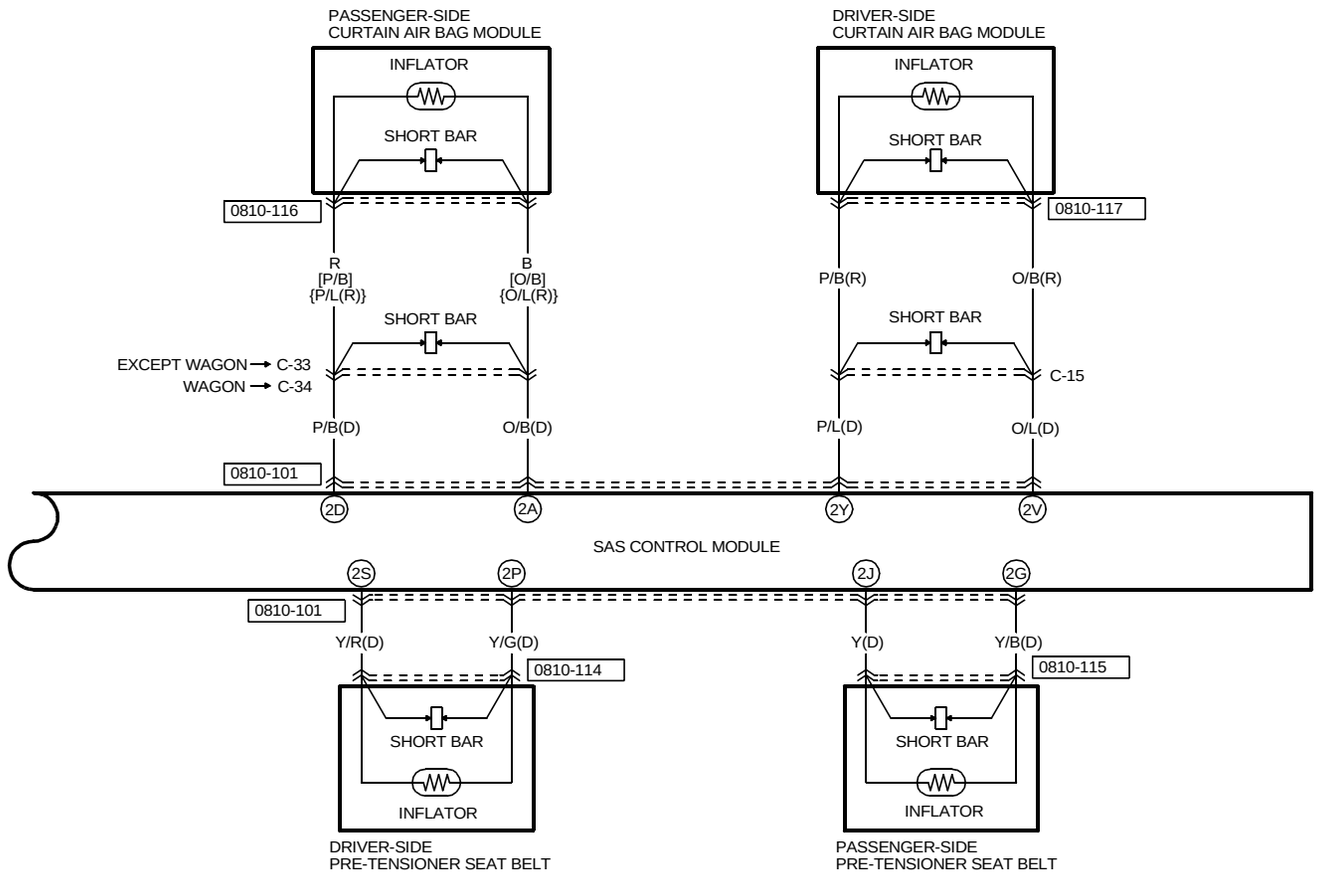

0810-101
SAS CONTROL MODULE(D)

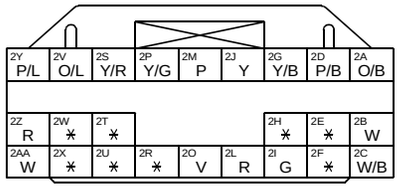

0810-114
DRIVER-SIDE PRE-TENSIONER SEAT BELT(D)

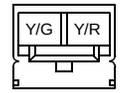

0810-115
PASSENGER-SIDE PRE-TENSIONER SEAT BELT(D)

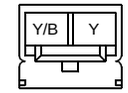

0810-116
PASSENGER-SIDE CURTAIN AIR BAG MODULE

(SHORT CORD)

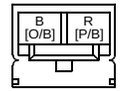

(EXCEPT WAGON)

(R)

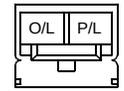

(WAGON)

0810-117
DRIVER-SIDE CURTAIN AIR BAG MODULE(R)

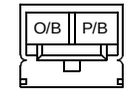

HARNESS SYMBOL : (F) (E) (D) (R)

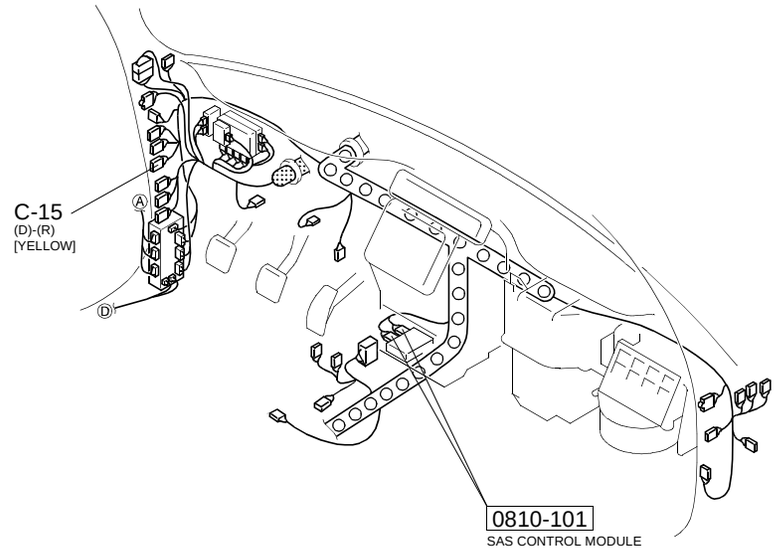

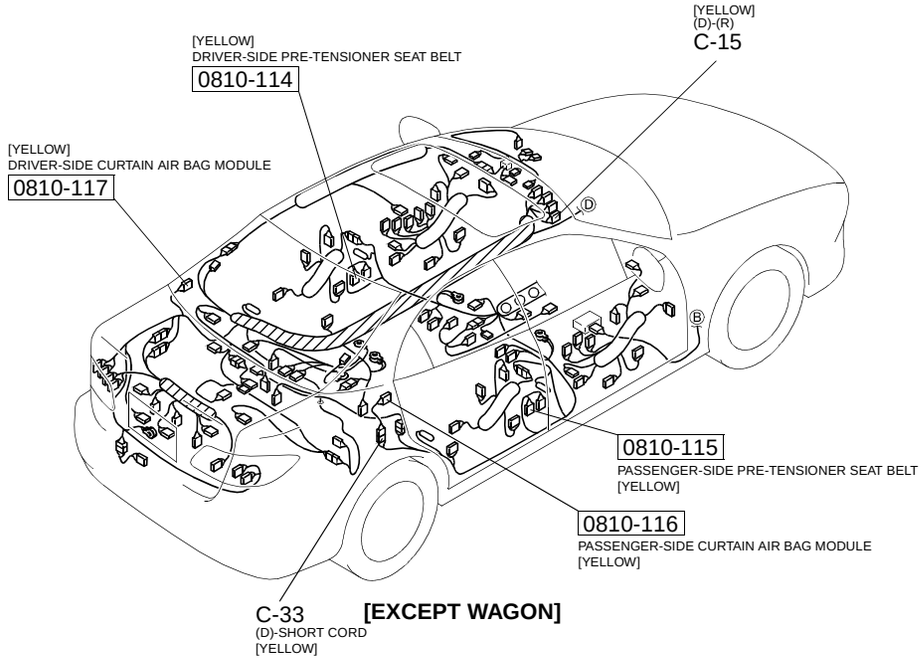

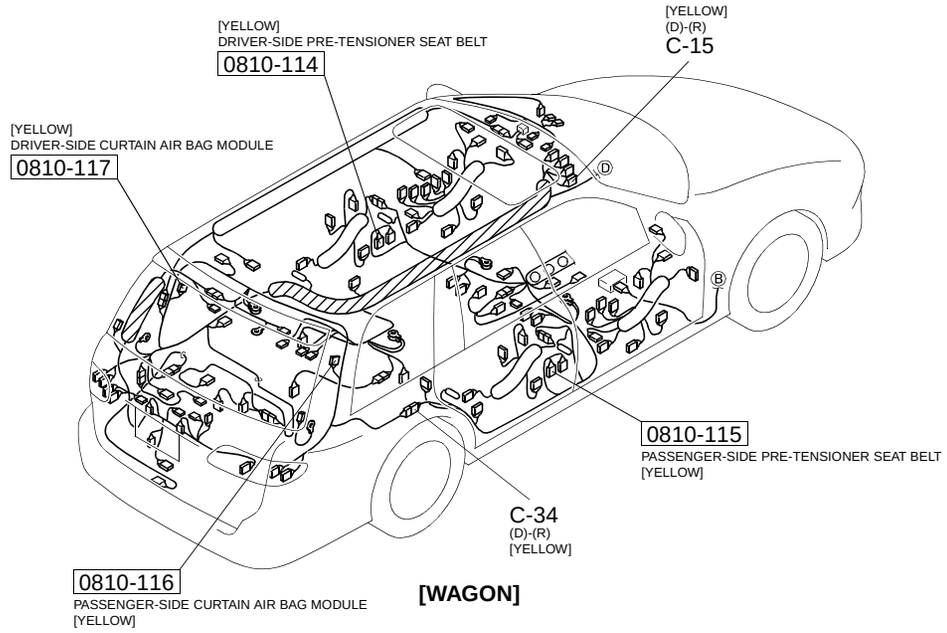

< > WITHOUT POWER SEAT
[ ] NOT USED
*: VACANT

WITHOUT POWER SEAT
W/G(D)
INSTRUMENT CLUSTER (SECTION 0922-1c)
105
W/G(D)
W/G(D)
C-30
17
WITH POWER SEAT
17
<W/G(D)>
0810-118
BUCKLE SWITCH
<N>
0810-118
19
<B(D)>
EXCEPT L3 Turbo
0810-120
55
A
B
52
0810-120
BELT REMINDER
WITHOUT POWER SEAT
B(D)
19
N
C-30
B(D)
WITH POWER SEAT
INSTRUMENT CLUSTER (SECTION 0922-1g)
106
W/L(D)
C-41
55
55
0810-119
0810-119
52
BUCKLE SWITCH
52
C-41
B(D)
B(D)
B(D)
9
10

0810-118
BUCKLE SWITCH

(SHORT CORD)

19	17

TERMINALS OF THIS CONNECTOR ARE INDICATED BY NUMBERS.

(WITH POWER SEAT)

(D)

[P]	[L/R]	*	[G/B]	*	[BR/R]	M [B]
[R/W]	W/G	*	H [B]	[LG/B]	[G/R]	N B

M
N

(WITHOUT POWER SEAT)

0810-119
BUCKLE SWITCH(SHORT CORD)

52	55

TERMINALS OF THIS CONNECTOR ARE INDICATED BY NUMBERS.

(EXCEPT L3 Turbo)

0810-120
BELT REMINDER(SHORT CORD)

52	55
B	A

TERMINALS OF THIS CONNECTOR ARE INDICATED BY NUMBERS.

(EXCEPT L3 Turbo)

HARNESS SYMBOL : (F) (E) (D) (R)

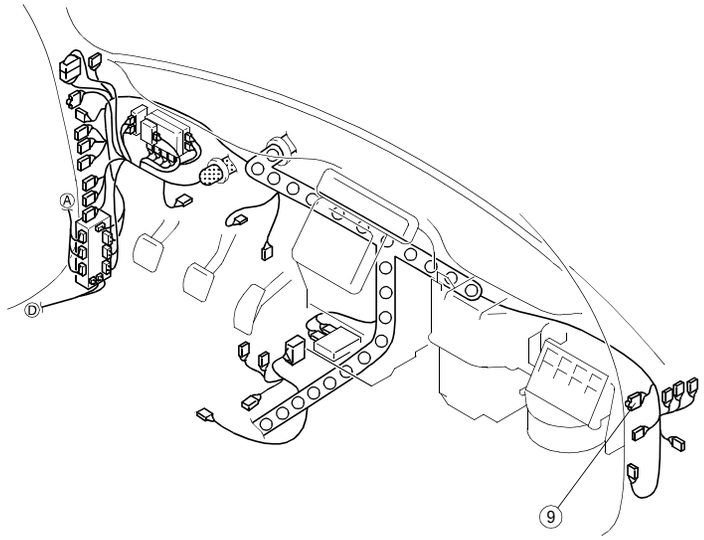

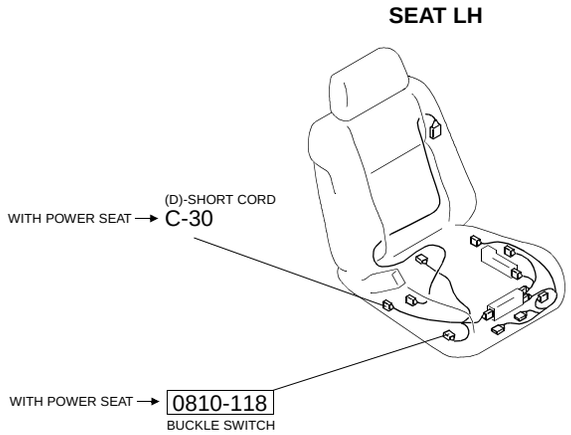

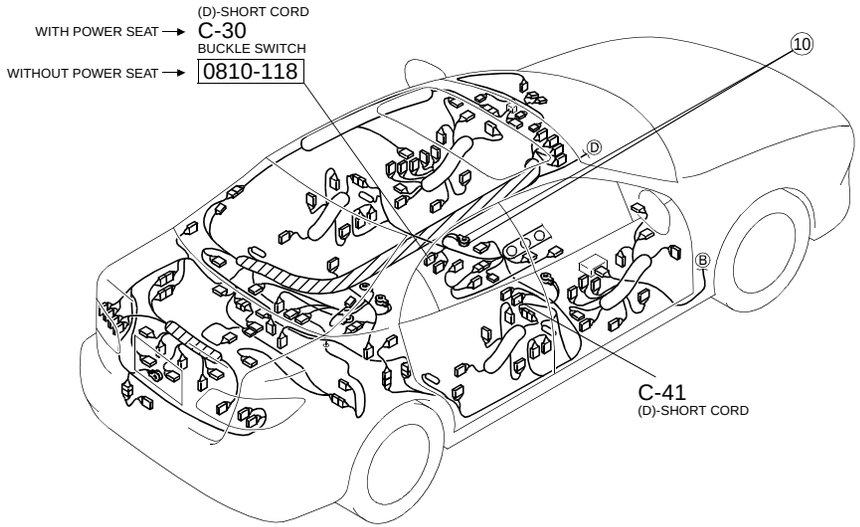

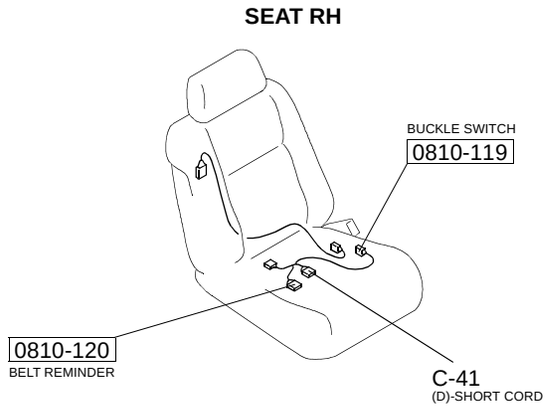

REAR WINDOW DEFROSTER (INCLUDES HEATED OUTER MIRROR INFORMATION)

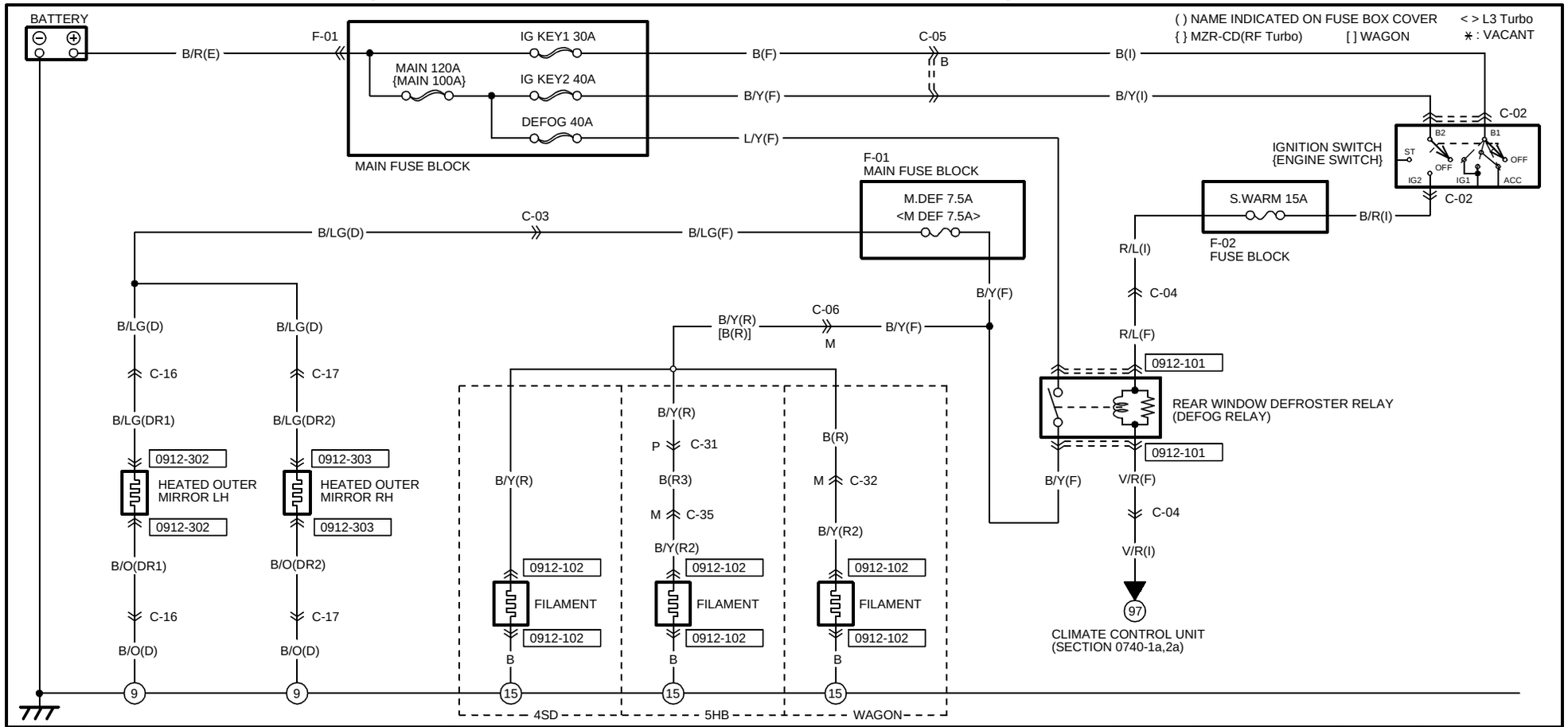

0912-101
REAR WINDOW DEFROSTER RELAY(F)

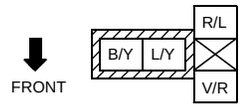

NOTE:SEEN FROM TERMINAL SIDE

0912-102
FILAMENT

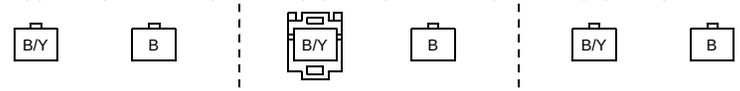

(4SD) (5HB) (WAGON)

0912-302
HEATED OUTER MIRROR LH (DR1)

∗	B/LG	B/O	∗
LG	BR/W	BR/Y	∗

0912-303
HEATED OUTER MIRROR RH (DR2)

∗	B/LG	B/O	∗
L/Y	BR/W	BR/B	∗

HARNESS SYMBOL : (F) (E) (D) (R)

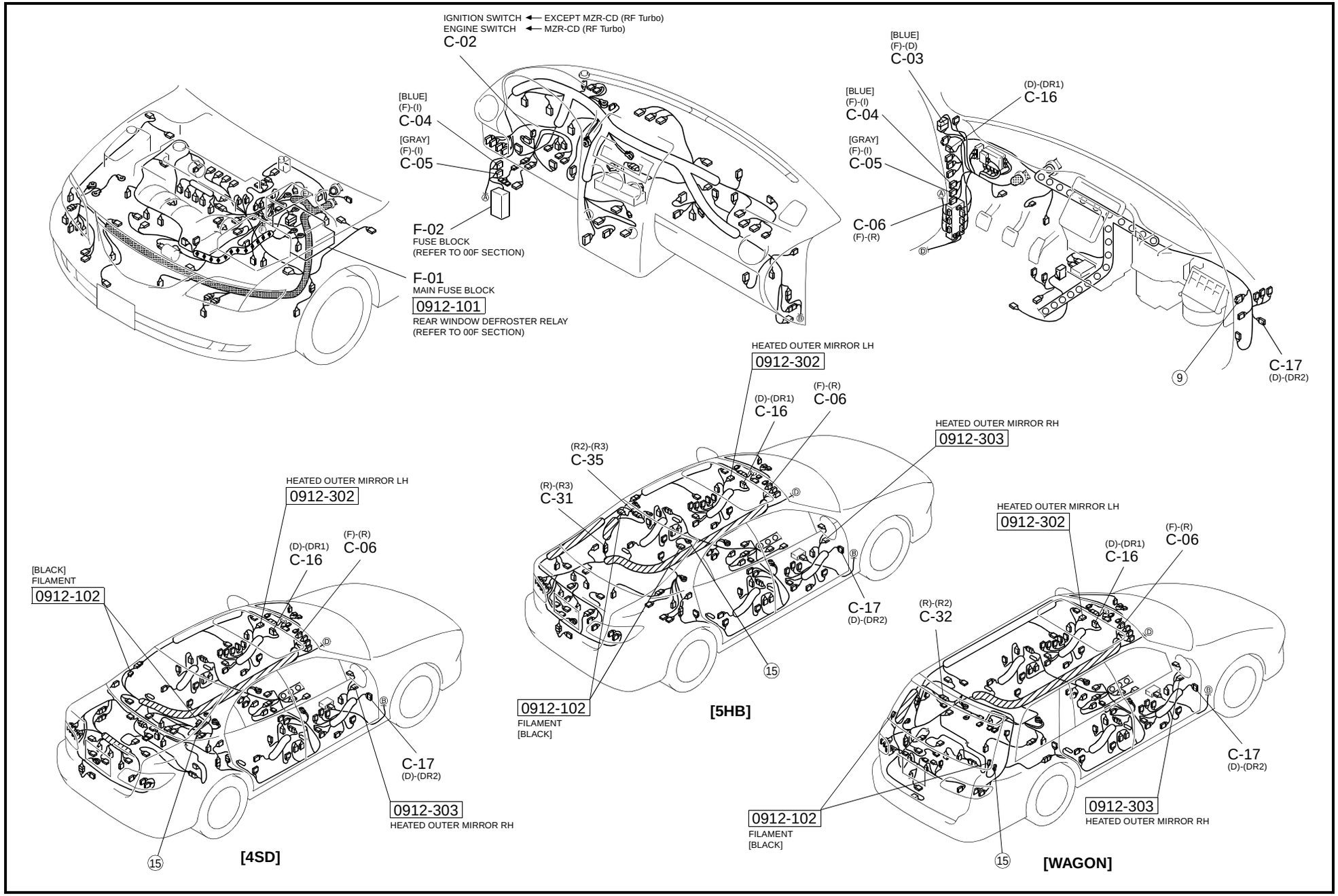

POWER WINDOW SYSTEM

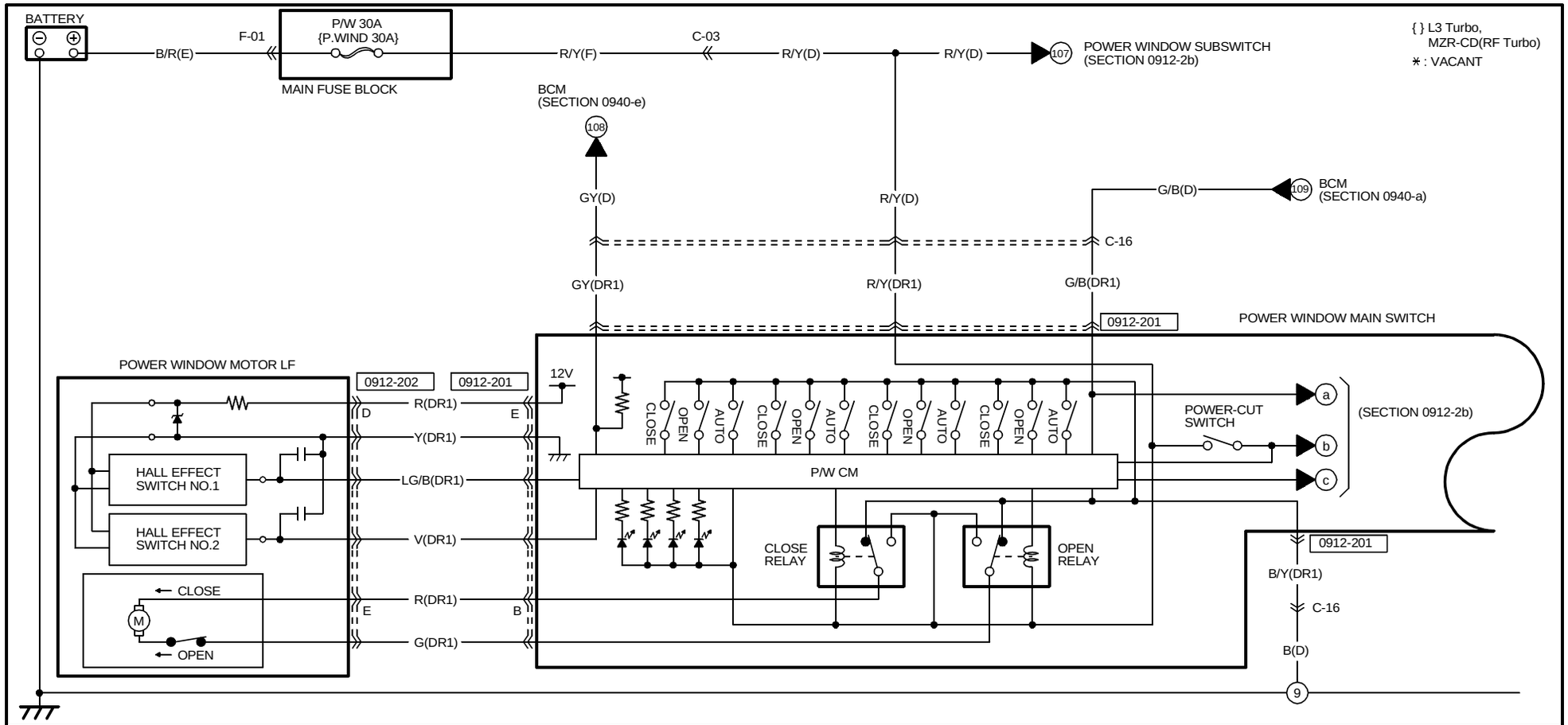

0912-201

POWER WINDOW MAIN SWITCH(DR1)

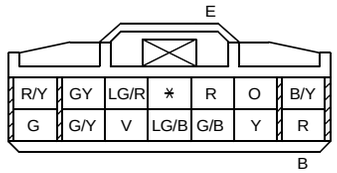

0912-202

POWER WINDOW MOTOR LF(DR1)

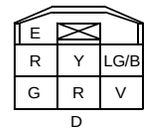

HARNESS SYMBOL : (F) (E) (D) (R)

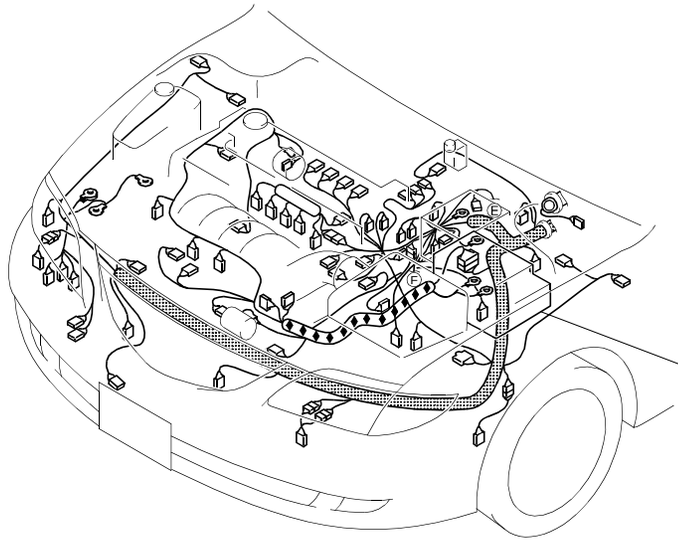

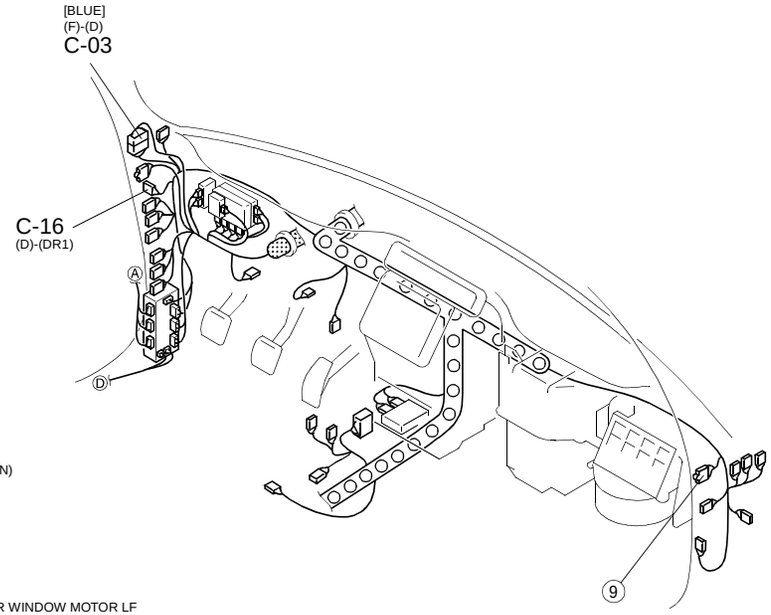

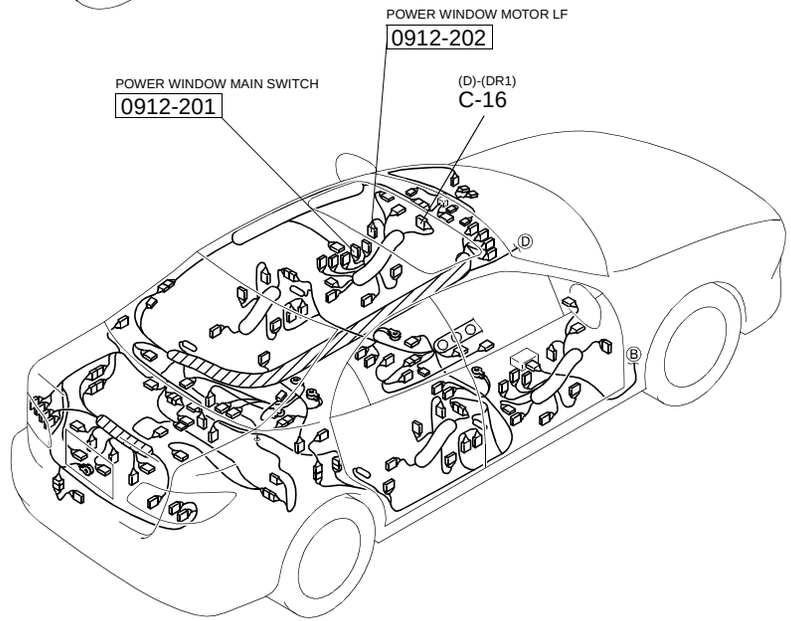

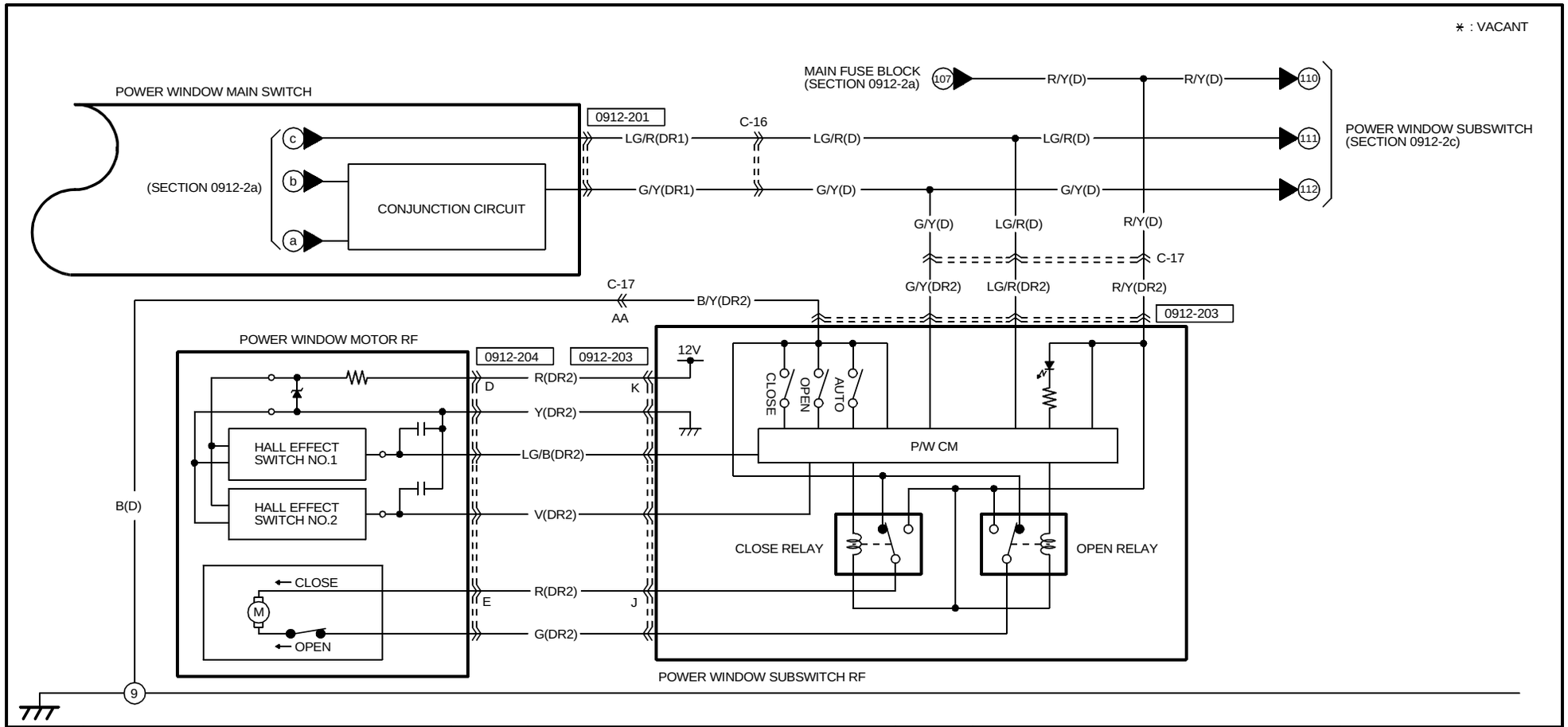

0912-201

POWER WINDOW MAIN SWITCH(DR1)

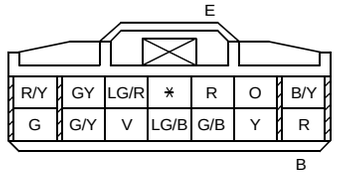

0912-203

POWER WINDOW SUBSWITCH RF(DR2)

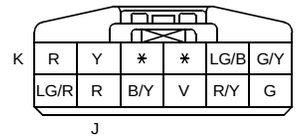

0912-204

POWER WINDOW MOTOR RF(DR2)

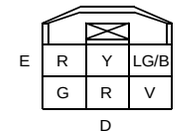

HARNESS SYMBOL : (F) (E) (D) (R)

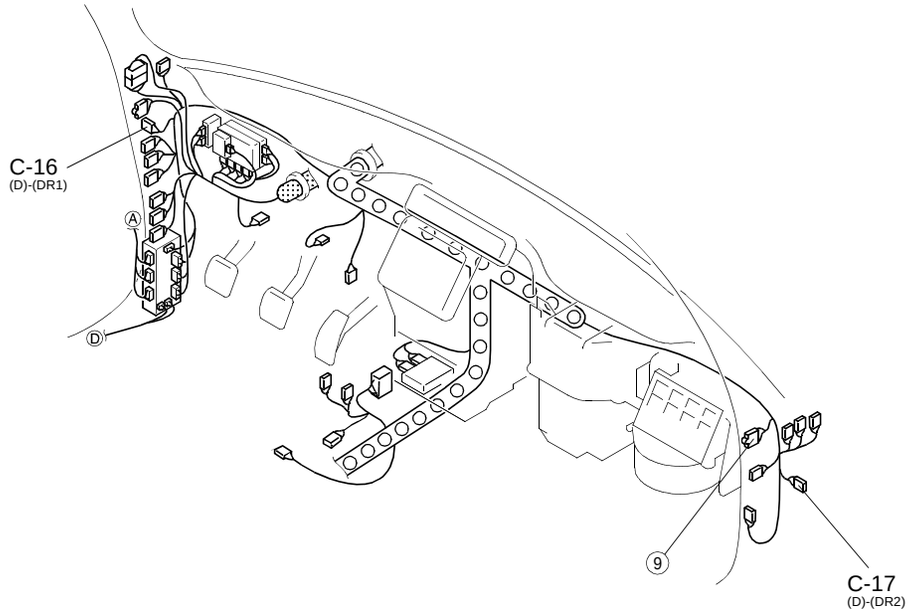

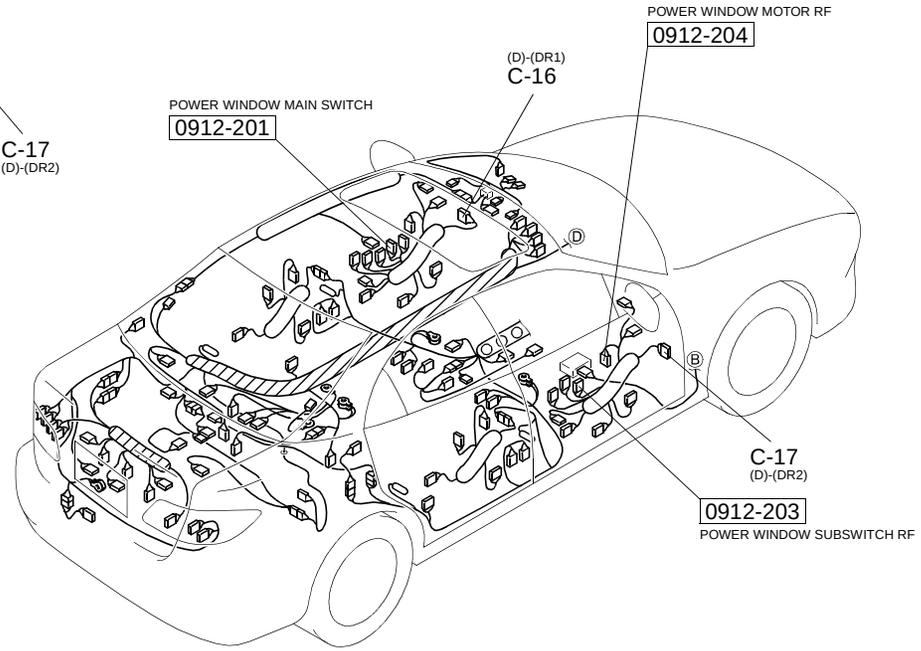

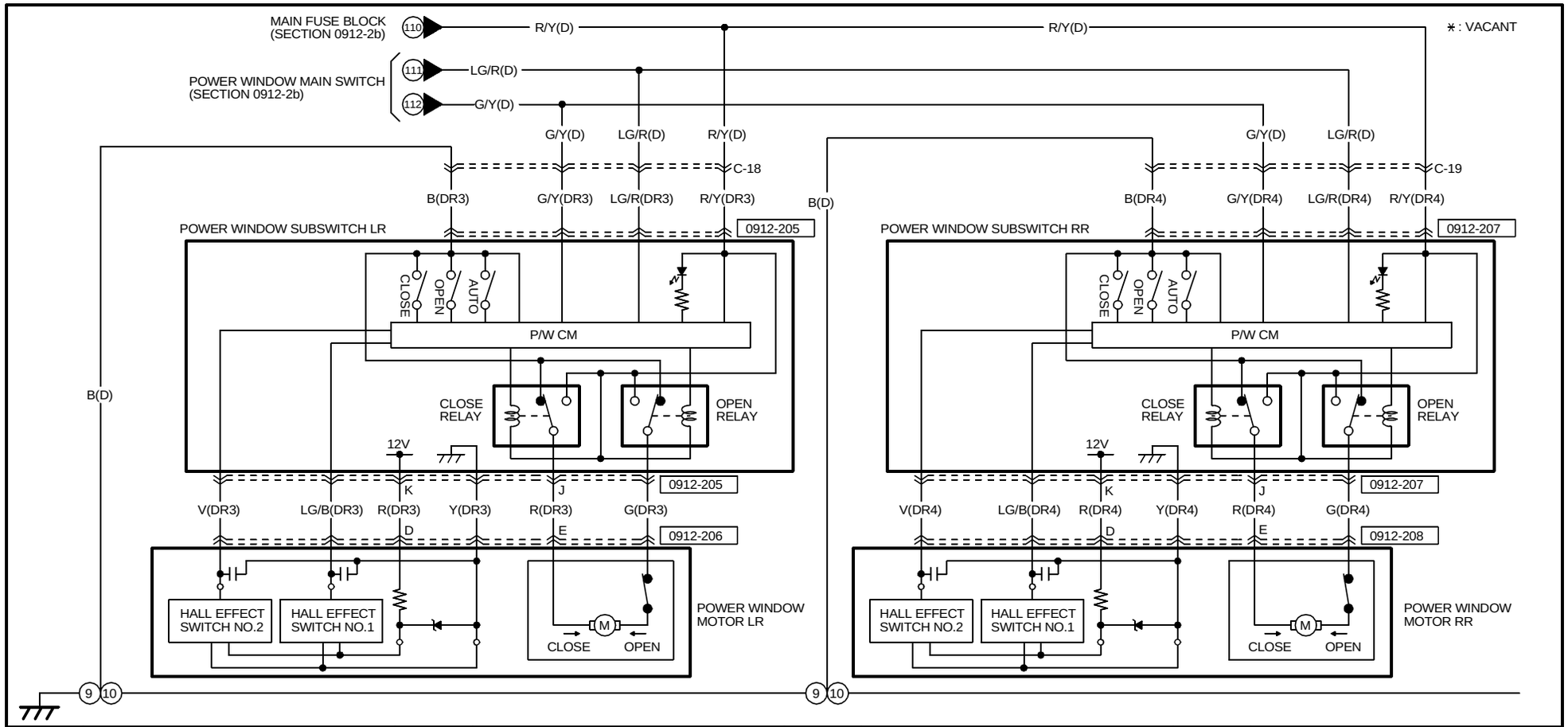

0912-205
POWER WINDOW SUBSWITCH LR(DR3)

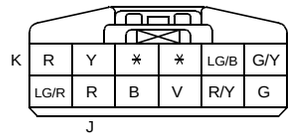

0912-206
POWER WINDOW MOTOR LR(DR3)

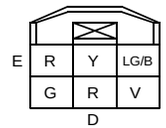

0912-207
POWER WINDOW SUBSWITCH RR(DR4)

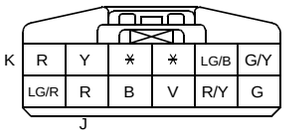

0912-208
POWER WINDOW MOTOR RR(DR4)

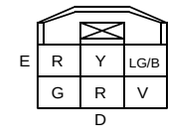

HARNESS SYMBOL : (F) (E) (D) (R)

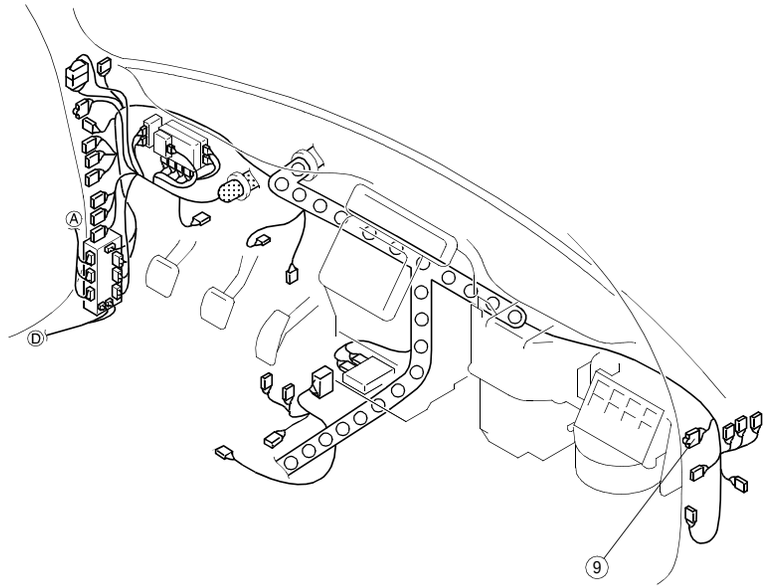

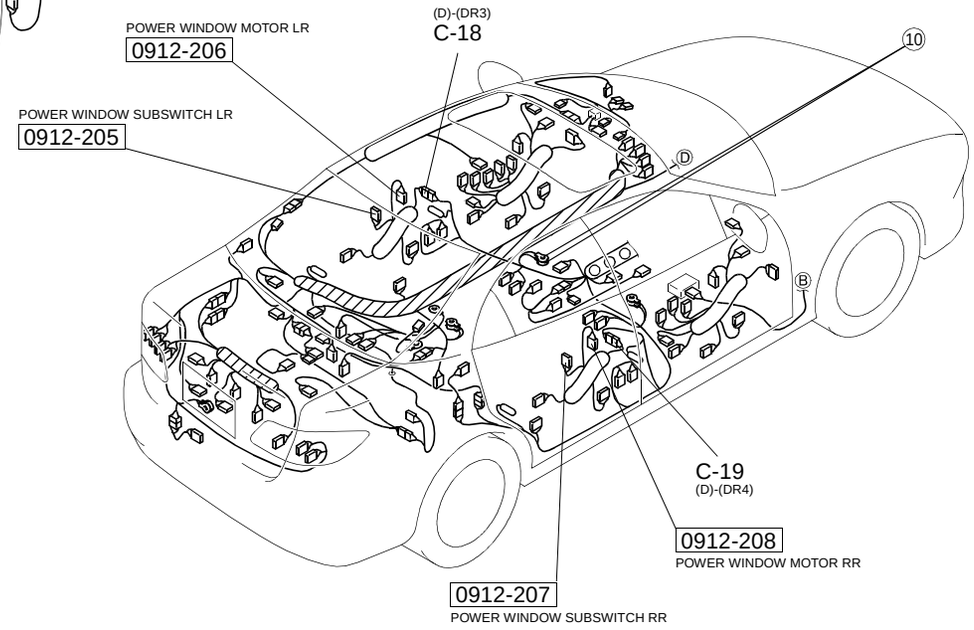

POWER OUTER MIRROR

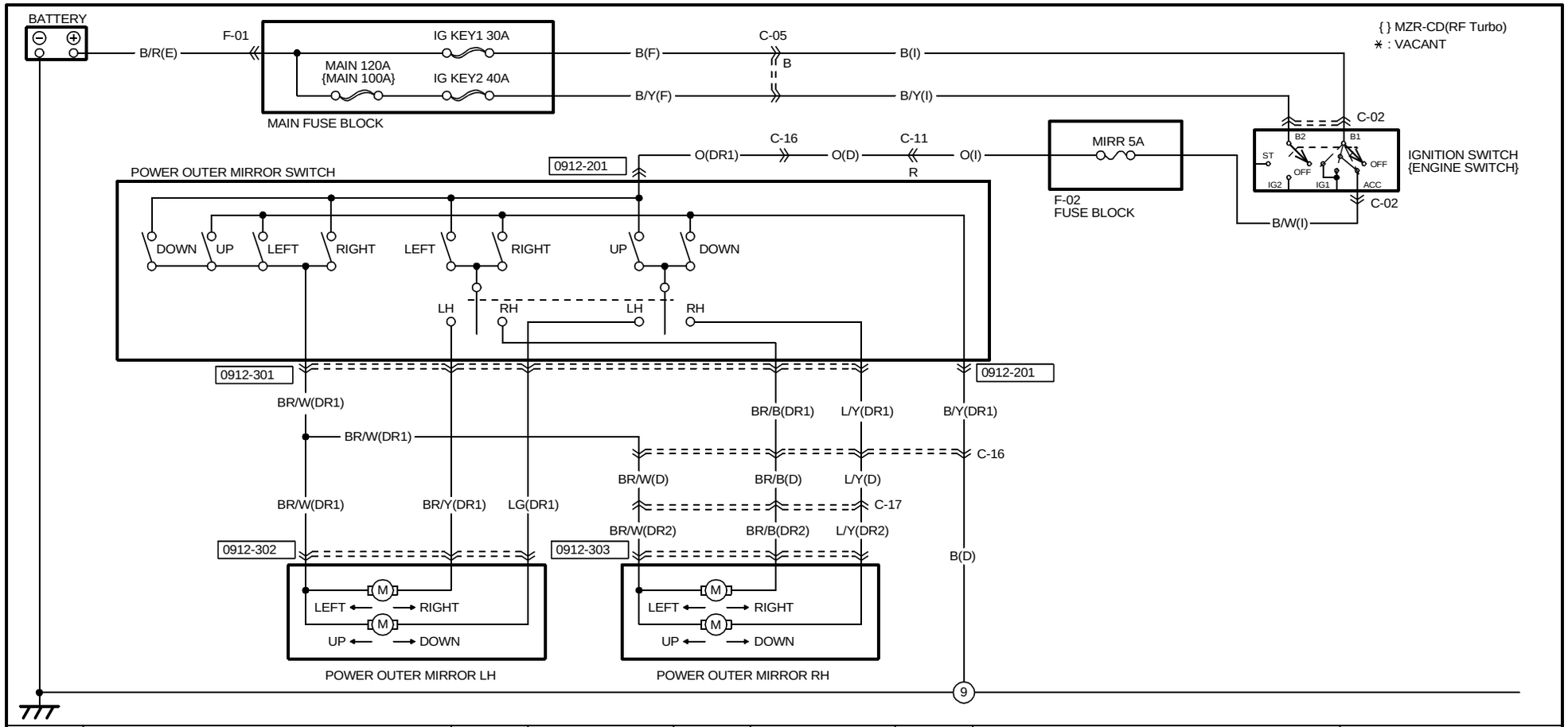

0912-301
POWER OUTER MIRROR SWITCH(DR1)

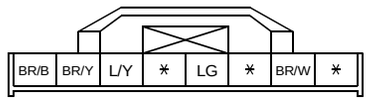

0912-302
POWER OUTER MIRROR LH
(DR1)

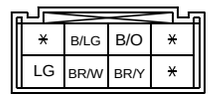

0912-303
POWER OUTER MIRROR RH
(DR2)

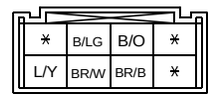

0912-201
POWER OUTER MIRROR SWITCH(DR1)

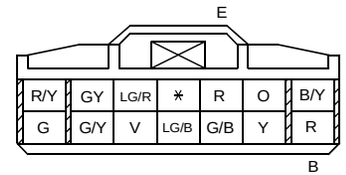

HARNESS SYMBOL : (F) (E) (D) (R)

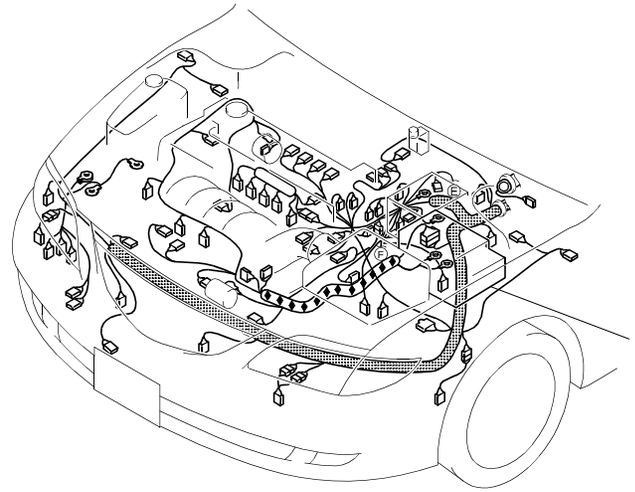

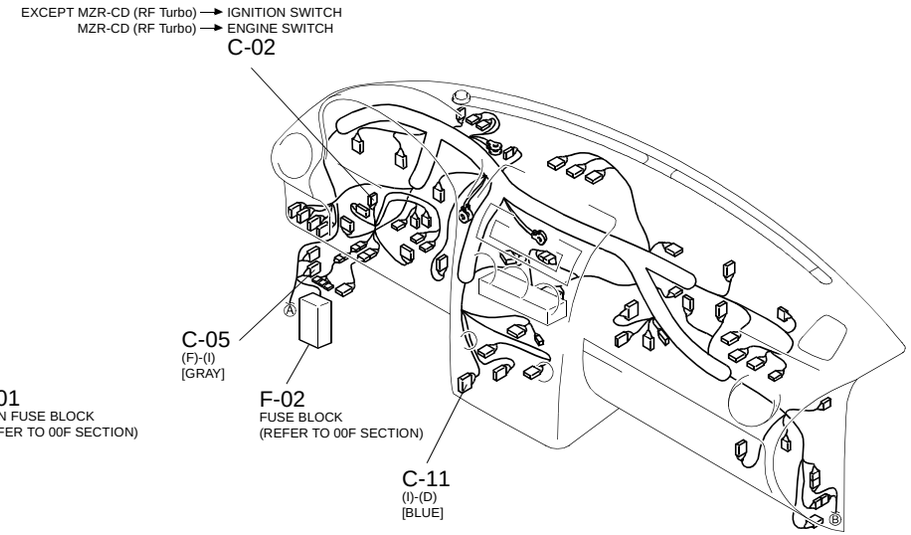

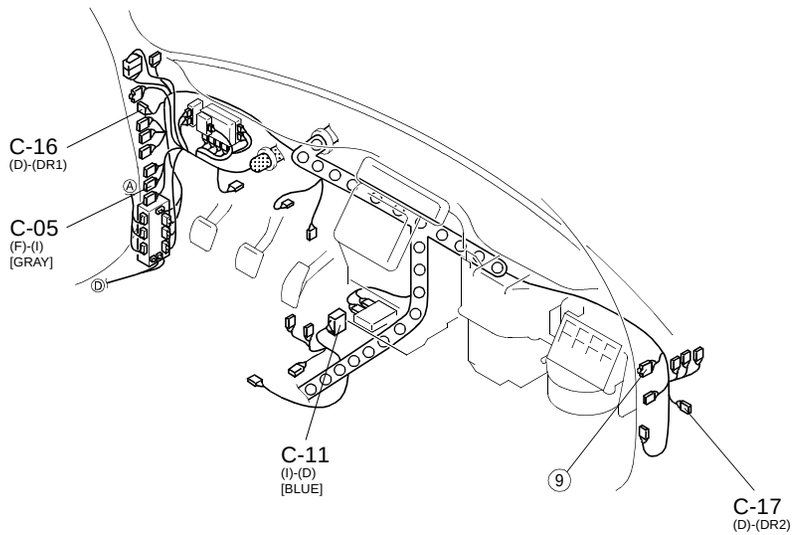

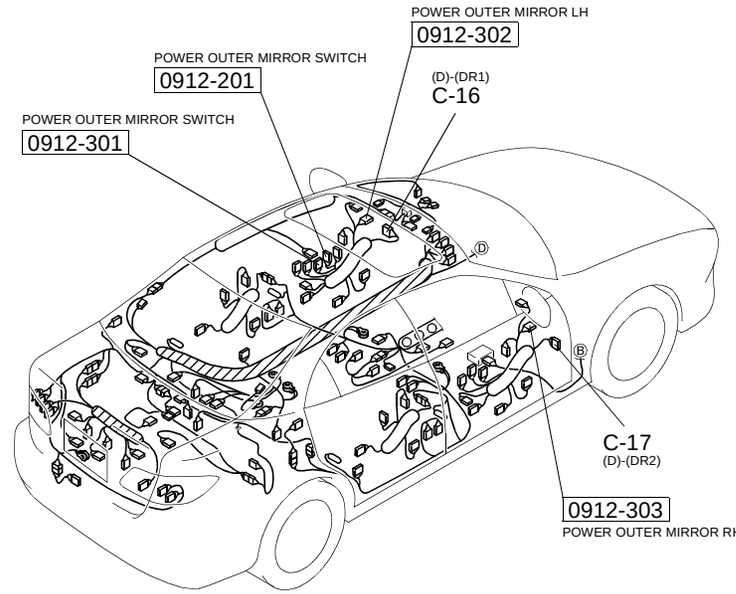

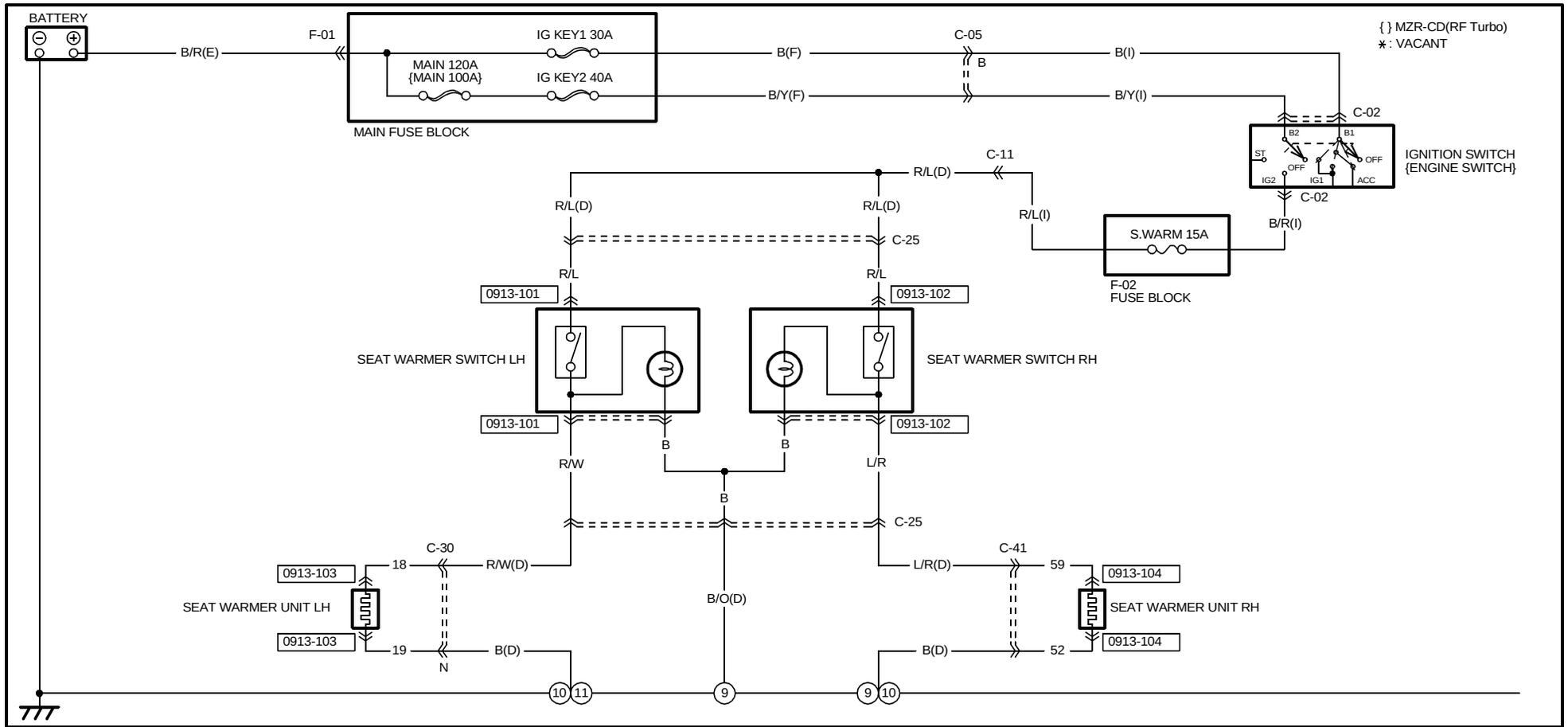

0913-101	0913-102	0913-103	0913-104
SEAT WARMER SWITCH LH(SHORT CORD)	SEAT WARMER SWITCH RH(SHORT CORD)	SEAT WARMER UNIT LH(SHORT CORD)	SEAT WARMER UNIT RH(SHORT CORD)
LG/R, B/Y, R/W, R/L, ∗, B	LG/R, B/Y, L/R, R/L, ∗, B	19, 18	59, 52
		TERMINALS OF THIS CONNECTOR ARE INDICATED BY NUMBERS.	TERMINALS OF THIS CONNECTOR ARE INDICATED BY NUMBERS.

HARNESS SYMBOL : (F) (E) (D) (R)

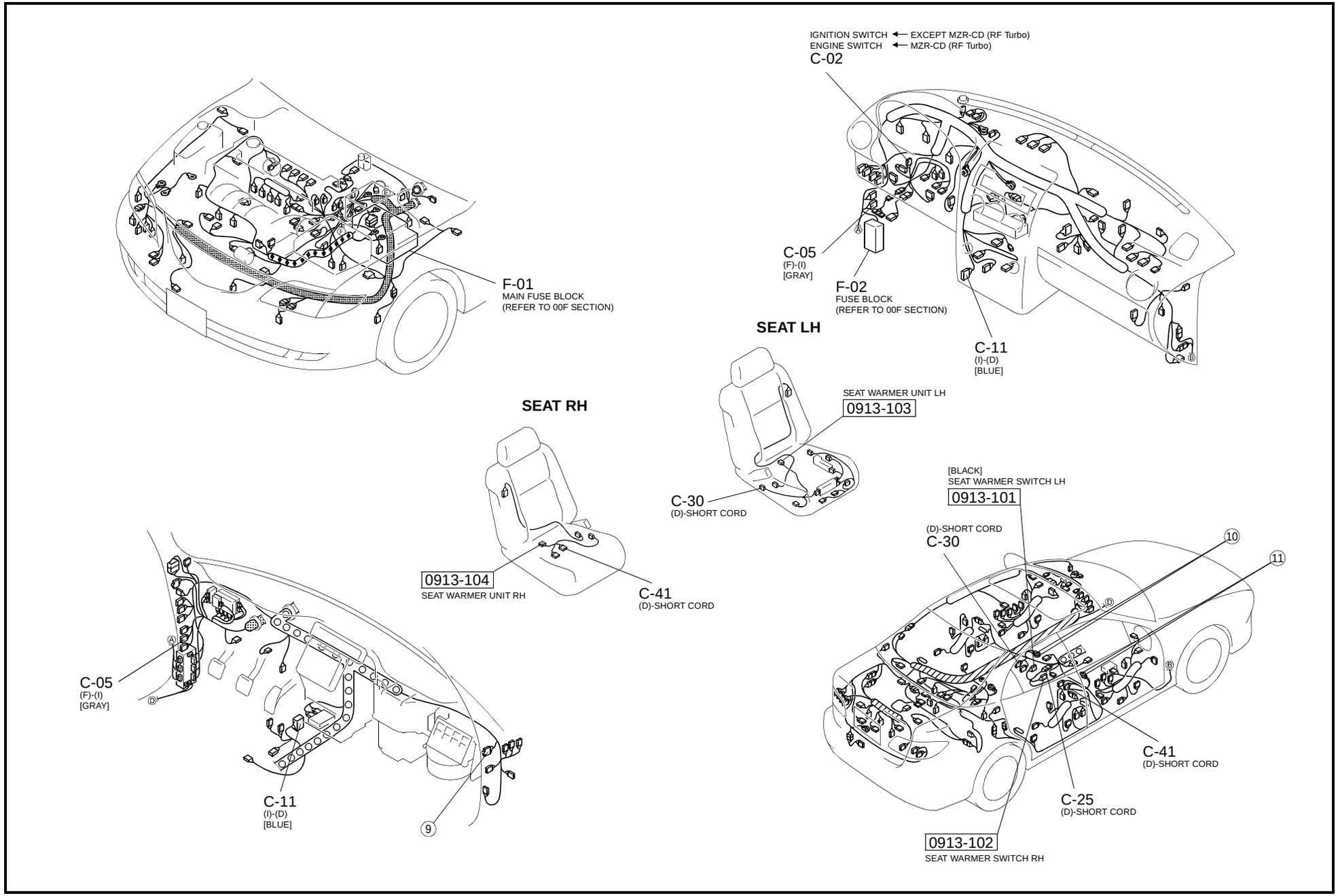

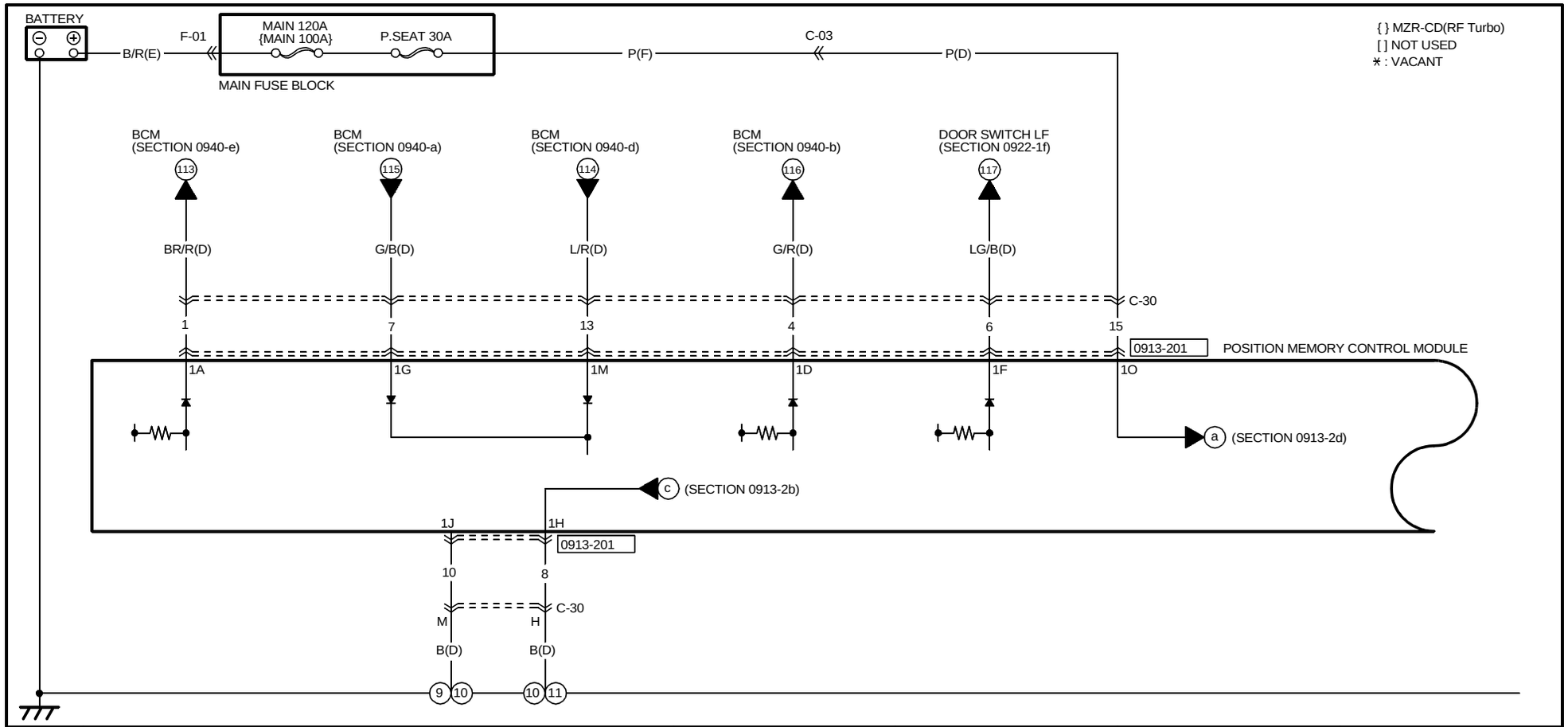

0913-201

POSITION MEMORY CONTROL MODULE(SHORT CORD)

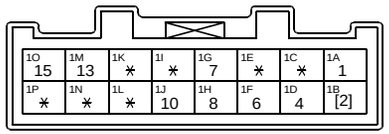

TERMINALS OF THIS CONNECTOR
ARE INDICATED BY NUMBERS.

HARNESS SYMBOL : (F) (E) (D) (R)

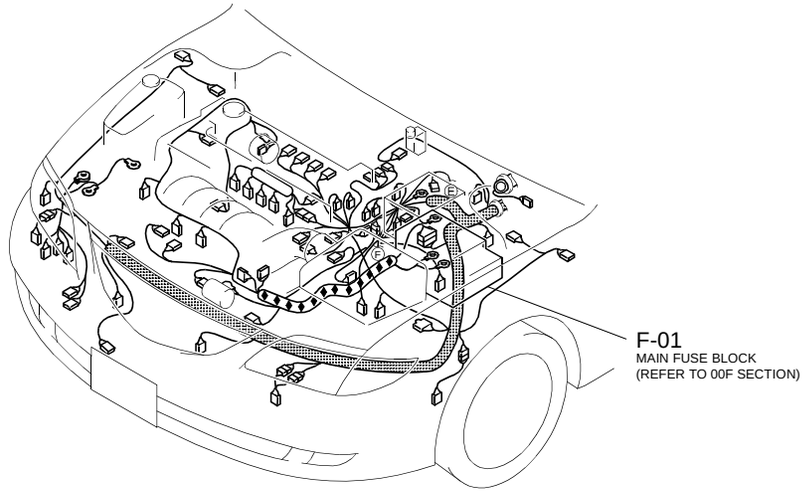

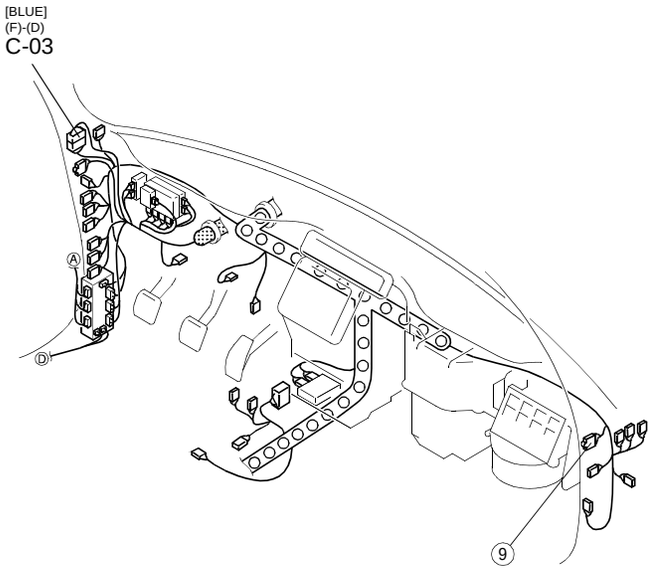

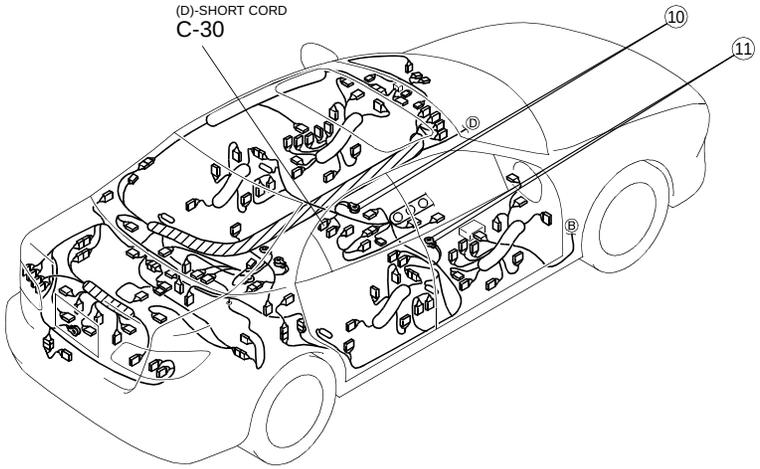

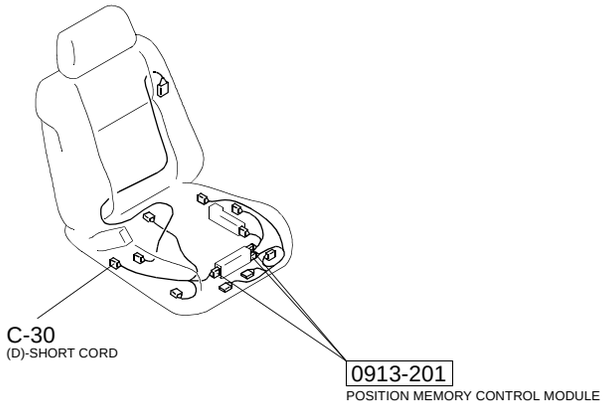

∗ : VACANT

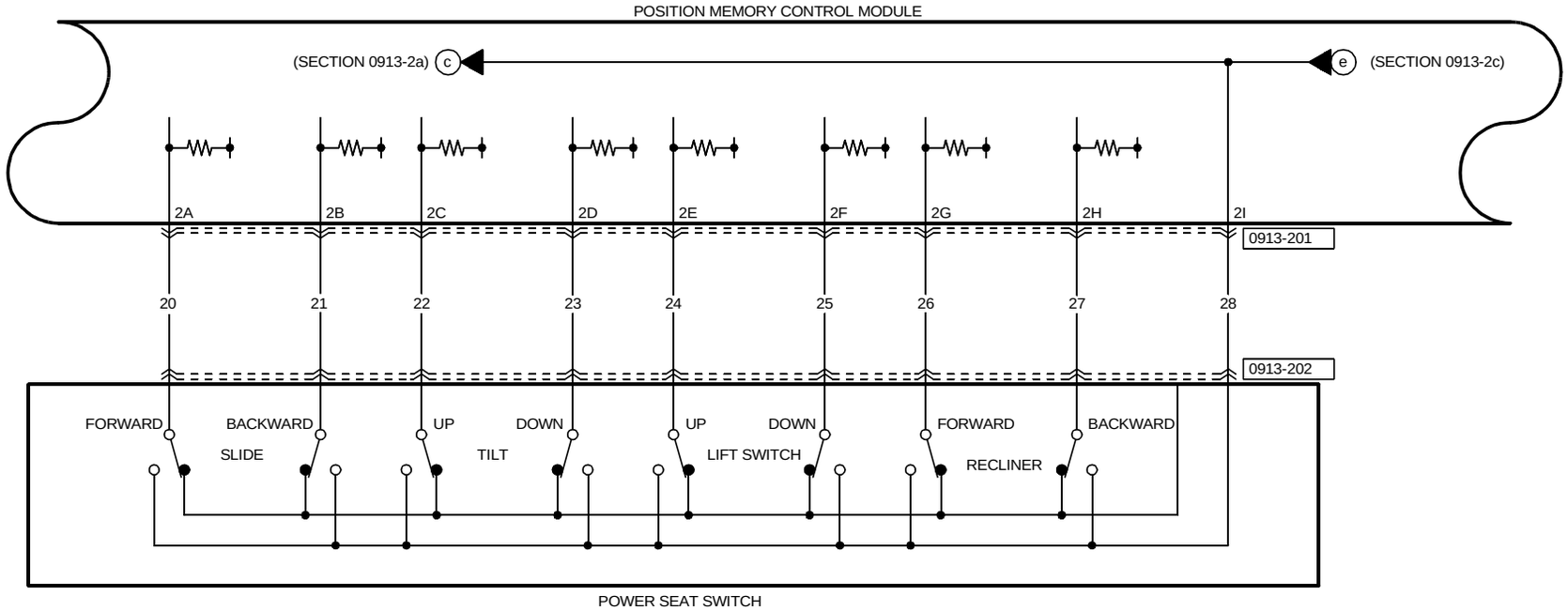

0913-201

POSITION MEMORY CONTROL MODULE(SHORT CORD)

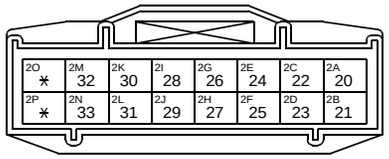

TERMINALS OF THIS CONNECTOR
ARE INDICATED BY NUMBERS.

0913-202

POWER SEAT SWITCH(SHORT CORD)

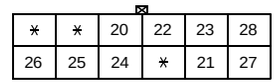

TERMINALS OF THIS CONNECTOR
ARE INDICATED BY NUMBERS.

HARNESS SYMBOL : (F) (E) (D) (R)

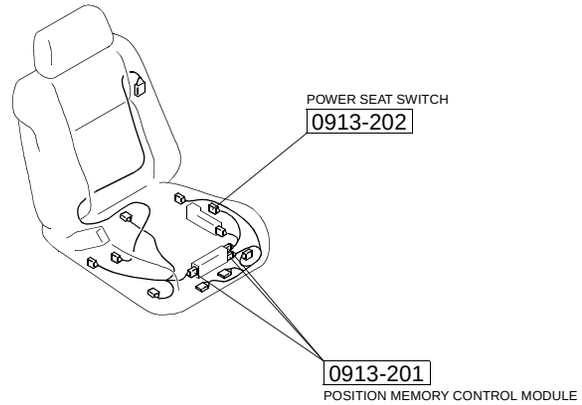

∗ : VACANT

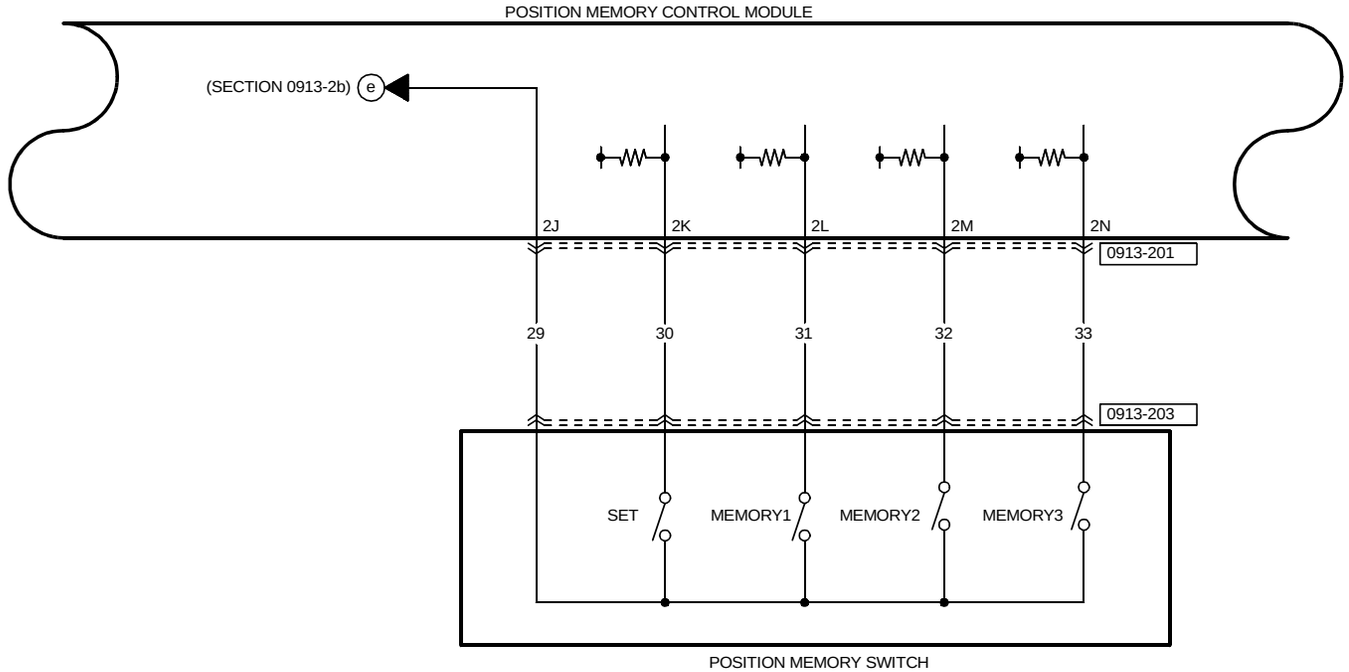

0913-201

POSITION MEMORY CONTROL MODULE(SHORT CORD)

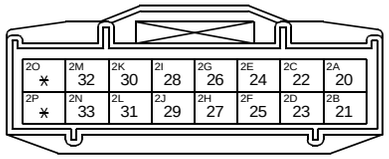

TERMINALS OF THIS CONNECTOR
ARE INDICATED BY NUMBERS.

0913-203

POSITION MEMORY SWITCH(SHORT CORD)

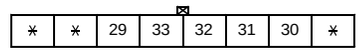

TERMINALS OF THIS CONNECTOR
ARE INDICATED BY NUMBERS.

HARNESS SYMBOL : (F) (E) (D) (R)

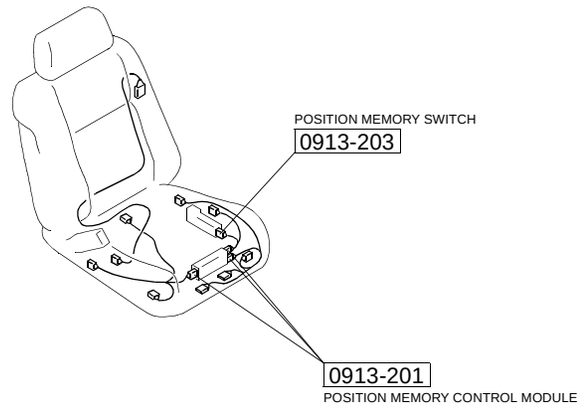

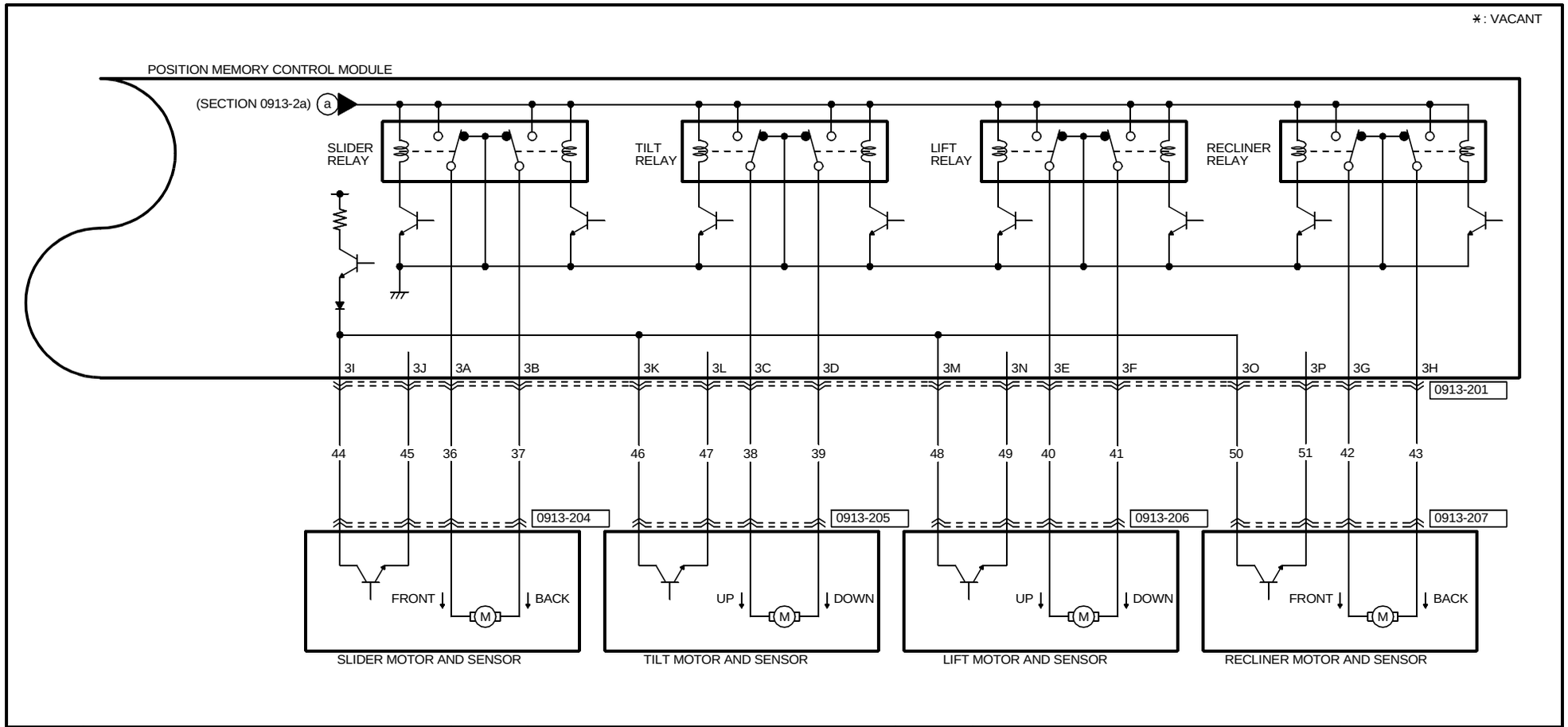

0913-201

POSITION MEMORY CONTOROL MODULE(SHORT CORD)

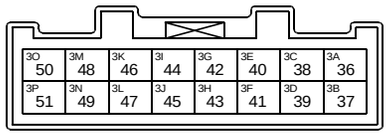

TERMINALS OF THIS CONNECTOR ARE INDICATED BY NUMBERS.

0913-204

SLIDER MOTOR AND SENSOR(SHORT CORD)

TERMINALS OF THIS CONNECTOR ARE INDICATED BY NUMBERS.

0913-205

TILT MOTOR AND SENSOR(SHORT CORD)

TERMINALS OF THIS CONNECTOR ARE INDICATED BY NUMBERS.

0913-206

LIFT MOTOR AND SENSOR(SHORT CORD)

TERMINALS OF THIS CONNECTOR ARE INDICATED BY NUMBERS.

0913-207

RECLINER MOTOR AND SENSOR(SHORT CORD)

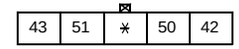

TERMINALS OF THIS CONNECTOR ARE INDICATED BY NUMBERS.

HARNESS SYMBOL : (F) (E) (D) (R)

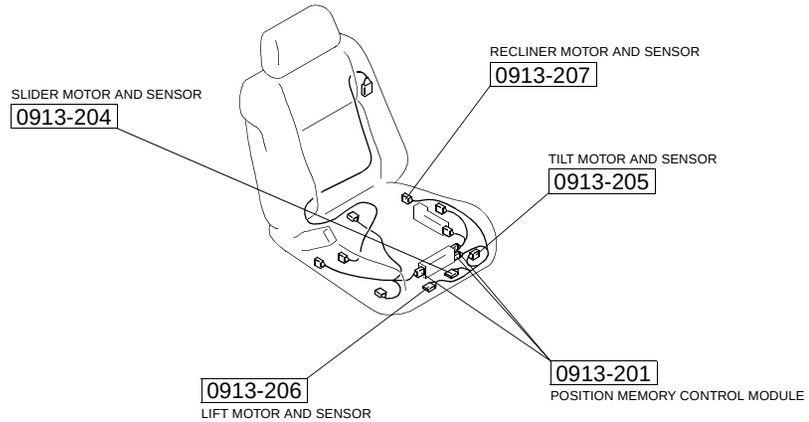

POWER DOOR LOCK SYSTEM

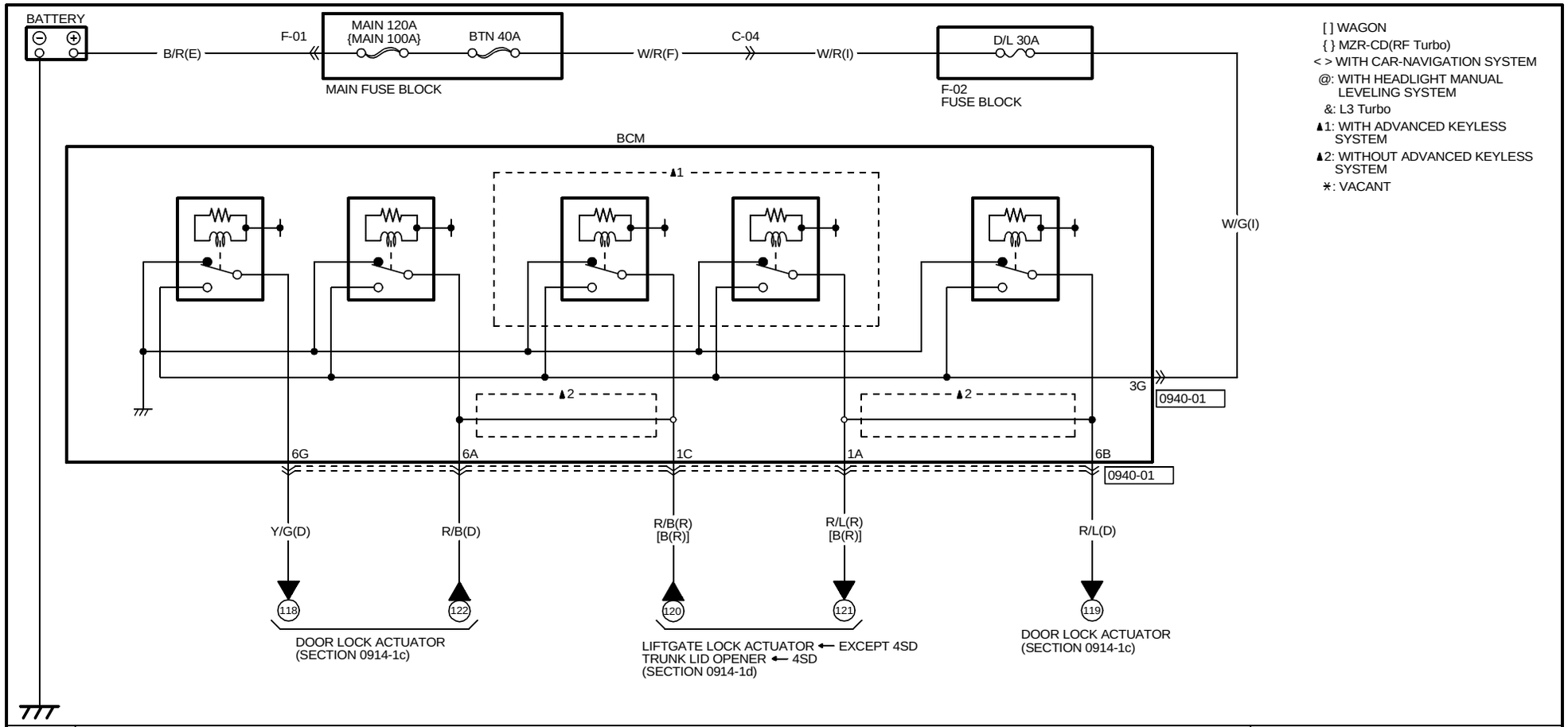

HARNESS SYMBOL : (F) (E) (D) (R)

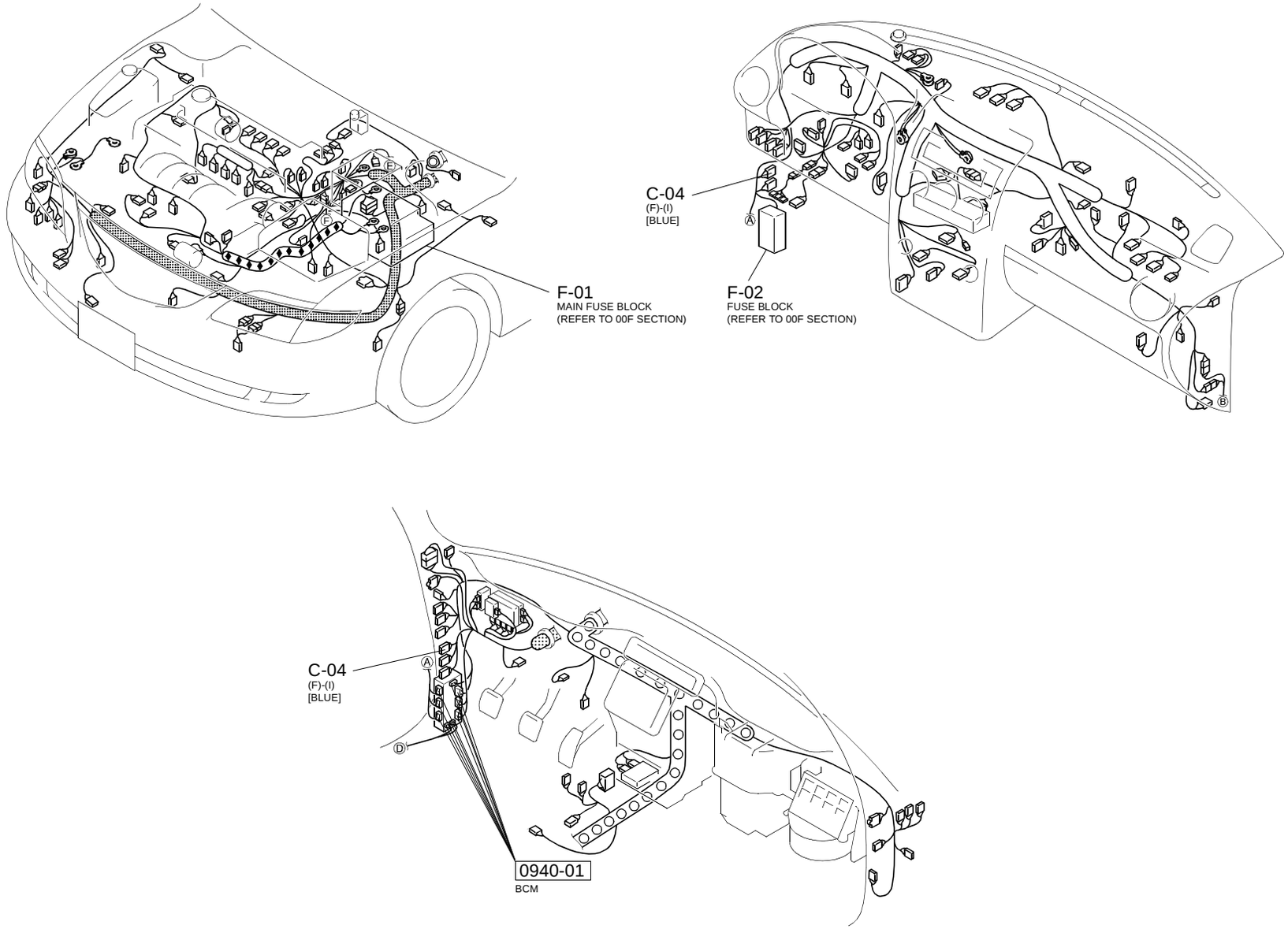

POWER DOOR LOCK SYSTEM

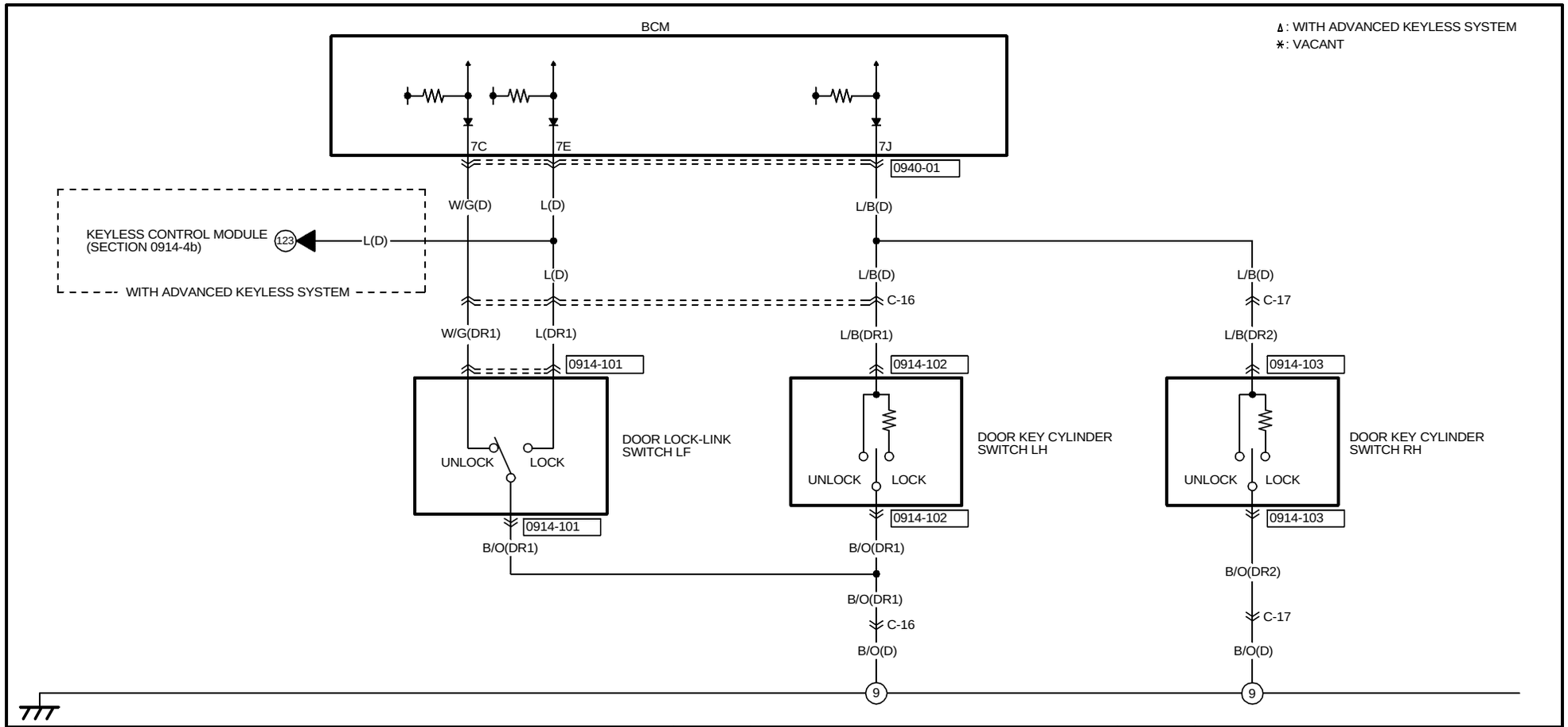

0940-01
BCM

(D)

7W ∗	7U B/L	7S ∗	7Q BR/R	7O GY	7M ∗	7K G/R	7I LG/R	7G W/R	7E L	7C W/G	7A B/O
7X ∗	7V ∗	7T G/R	7R ∗	7P ∗	7N LG	7L BR/W	7J L/B	7H ∗ ∆W/L	7F R/L	7D G/O	7B LG/B

0914-101
DOOR LOCK-LINK SWITCH LF(DR1)

B/O	W/G	L	R/L	Y/G	R/B

0914-102
DOOR KEY CYLINDER SWITCH LH(DR1)

B/O	L/B

0914-103
DOOR KEY CYLINDER SWITCH RH(DR2)

B/O	L/B

HARNESS SYMBOL : (F) (E) (D) (R)

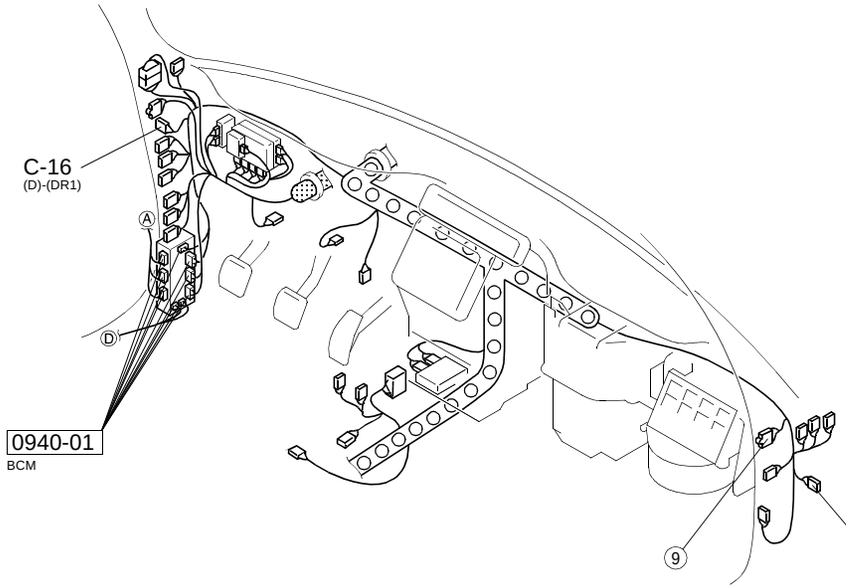

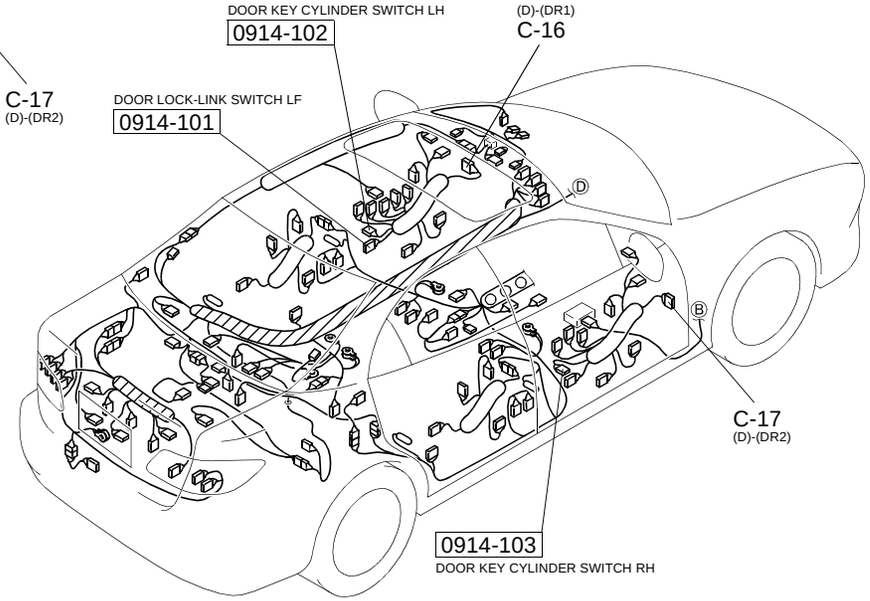

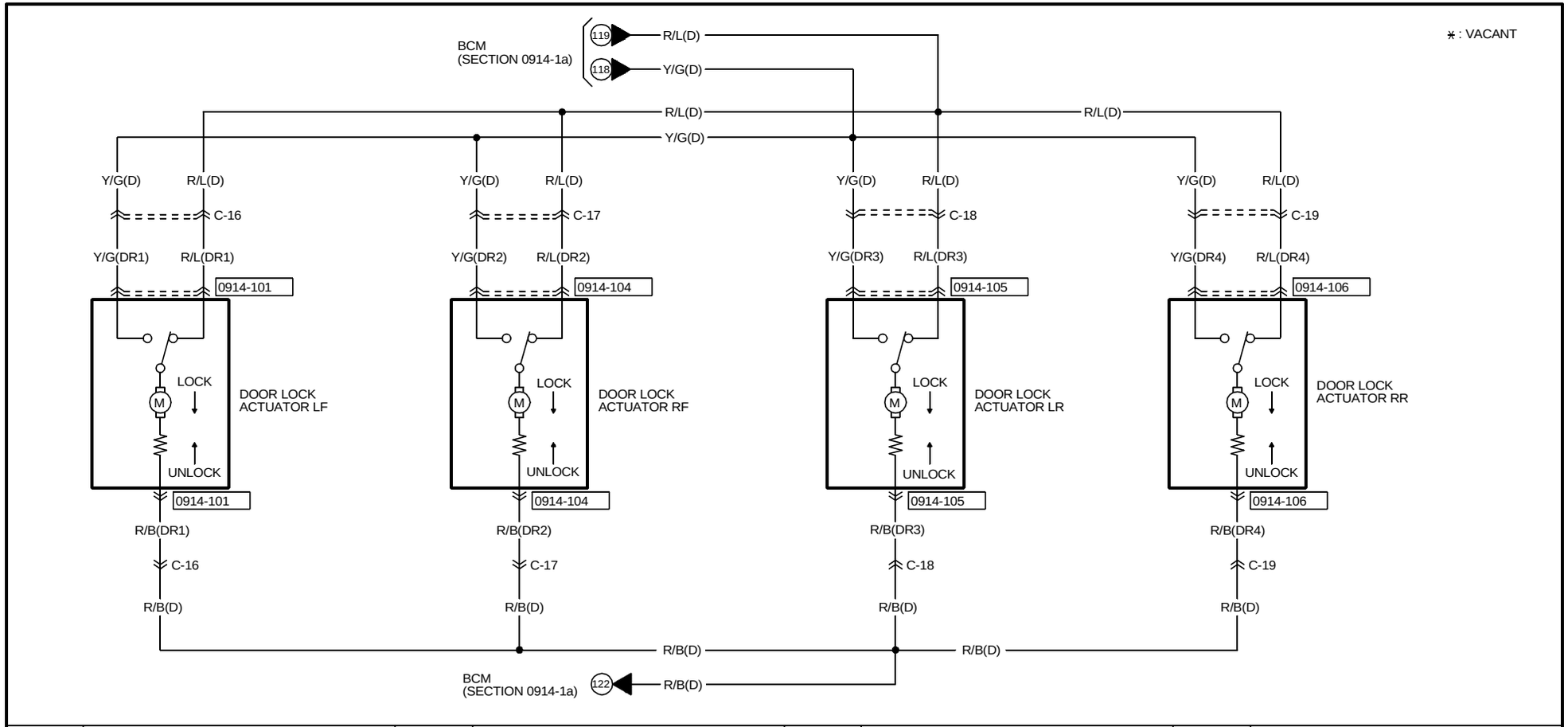

0914-101	0914-104	0914-105	0914-106
DOOR LOCK ACTUATOR LF(DR1)	DOOR LOCK ACTUATOR RF(DR2)	DOOR LOCK ACTUATOR LR(DR3)	DOOR LOCK ACTUATOR RR(DR4)
B/O W/G L R/L Y/G R/B	R/B Y/G R/L ∗ W/R B/O	Y/G R/L W/R ∗ B R/B	R/B B ∗ W/R R/L Y/G

HARNESS SYMBOL : (F) (E) (D) (R)

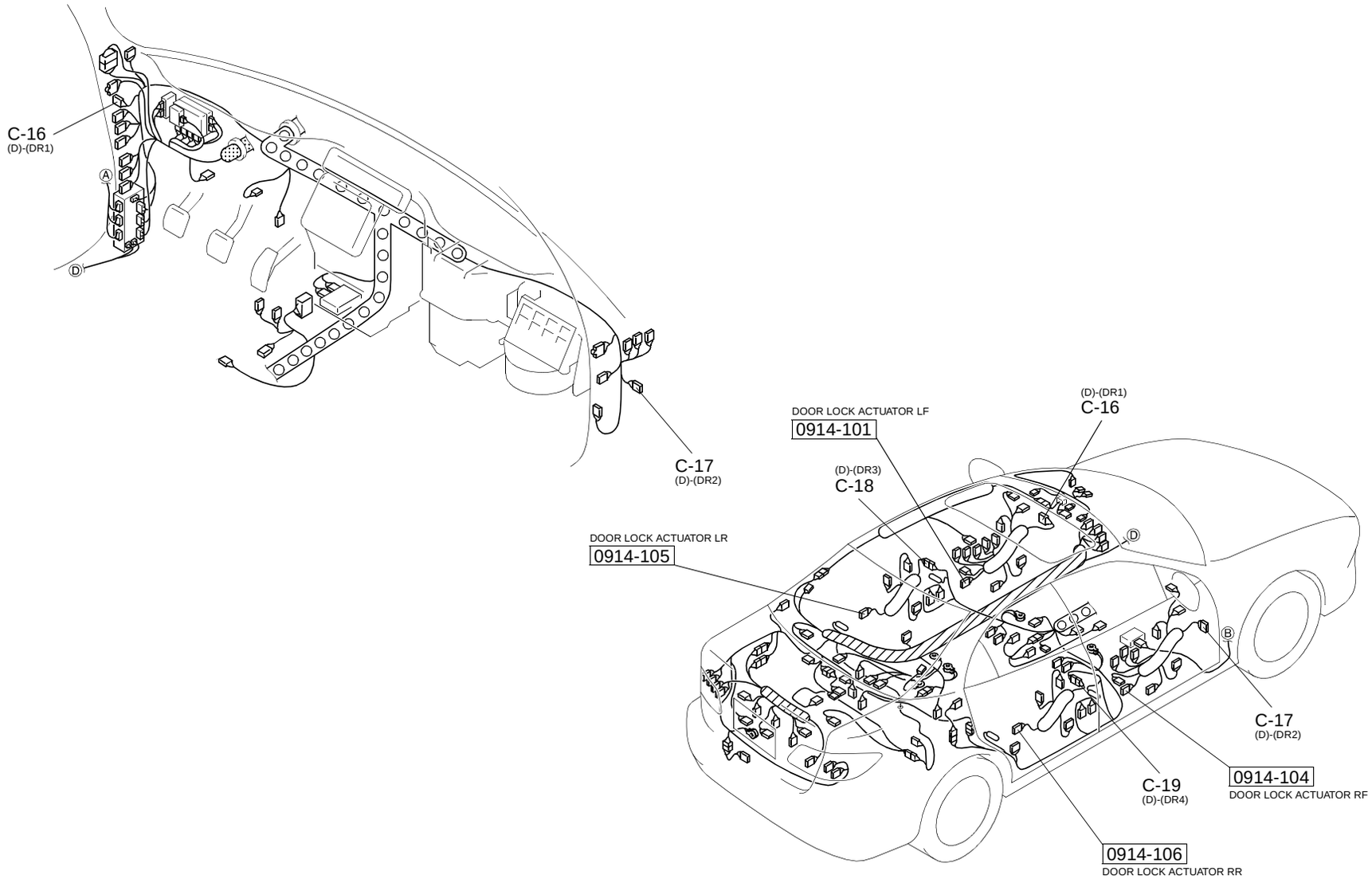

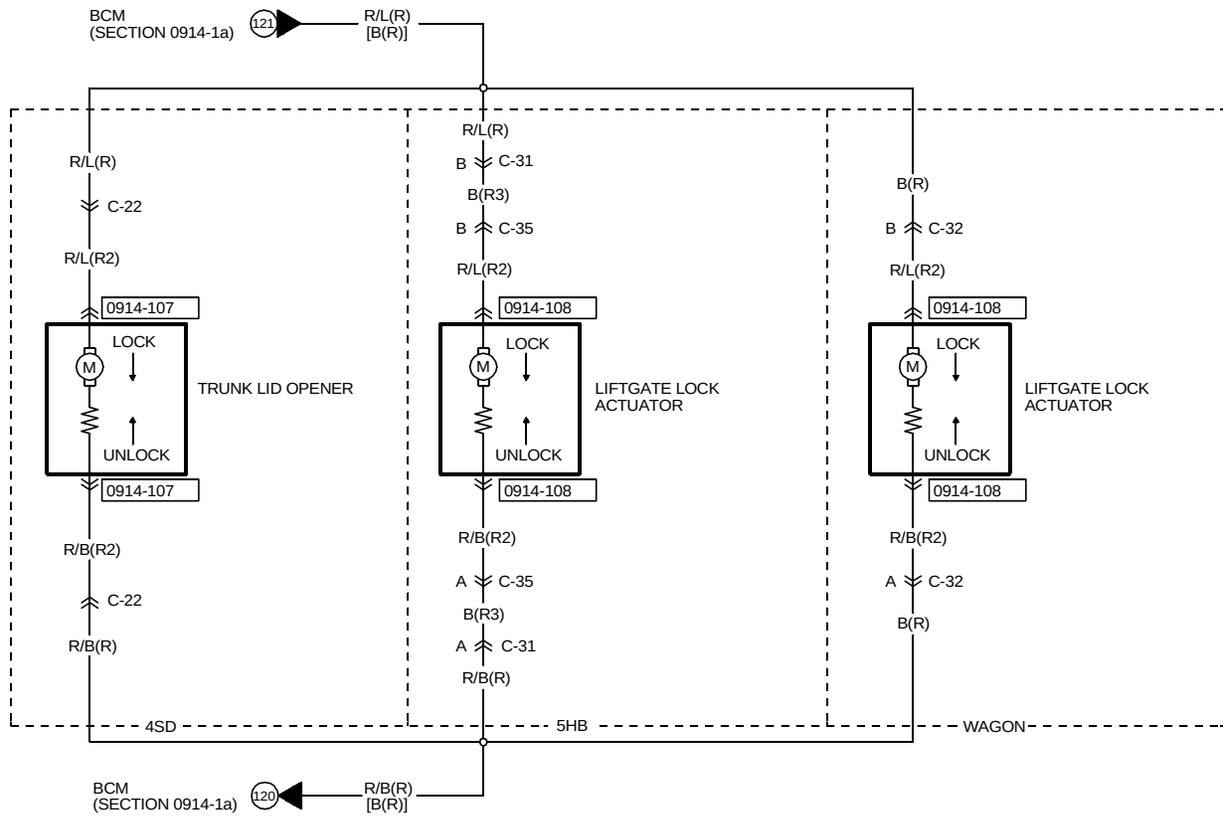

0914-107	0914-108		
TRUNK LID OPENER(R2) R/B R/L (4SD)	LIFTGATE LOCK ACTUATOR(R2) R/B R/L (EXCEPT 4SD)		

HARNESS SYMBOL : (F) (E) (D) (R)

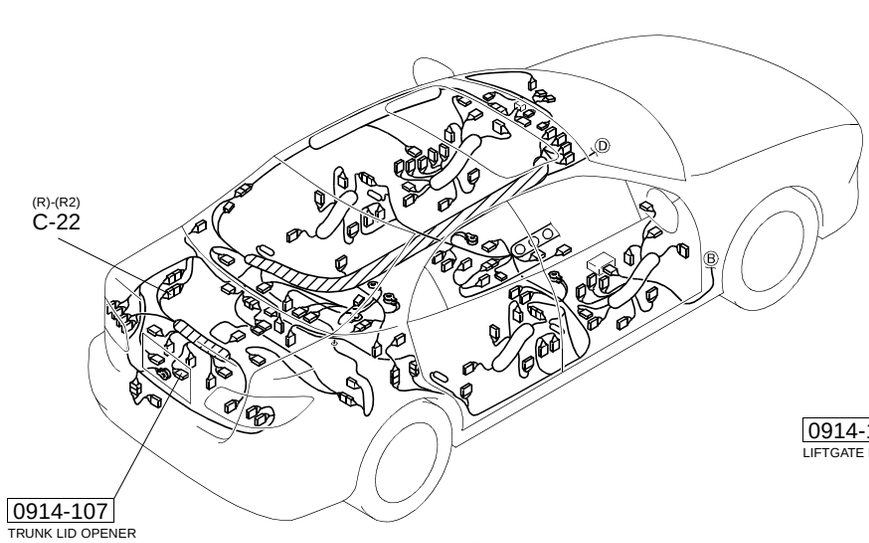

[4SD]

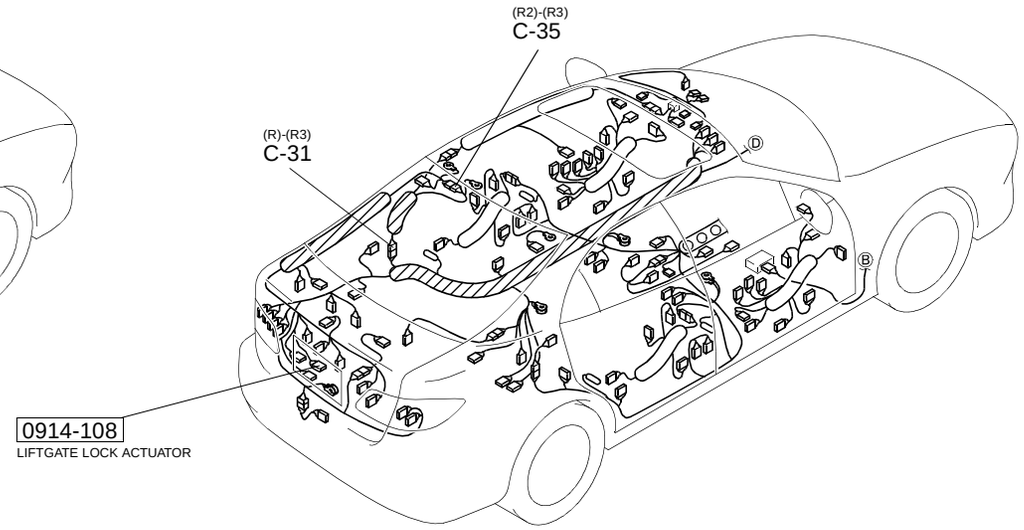

[5HB]

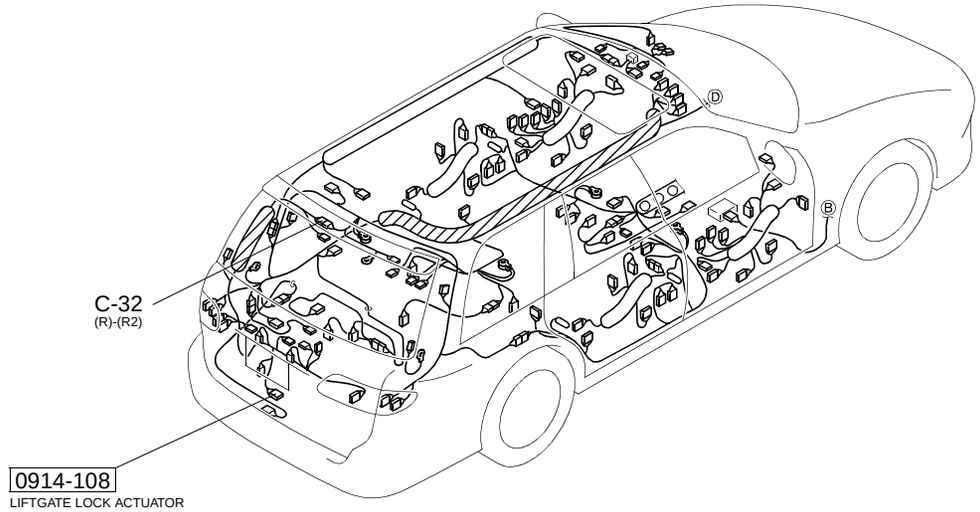

[WAGON]

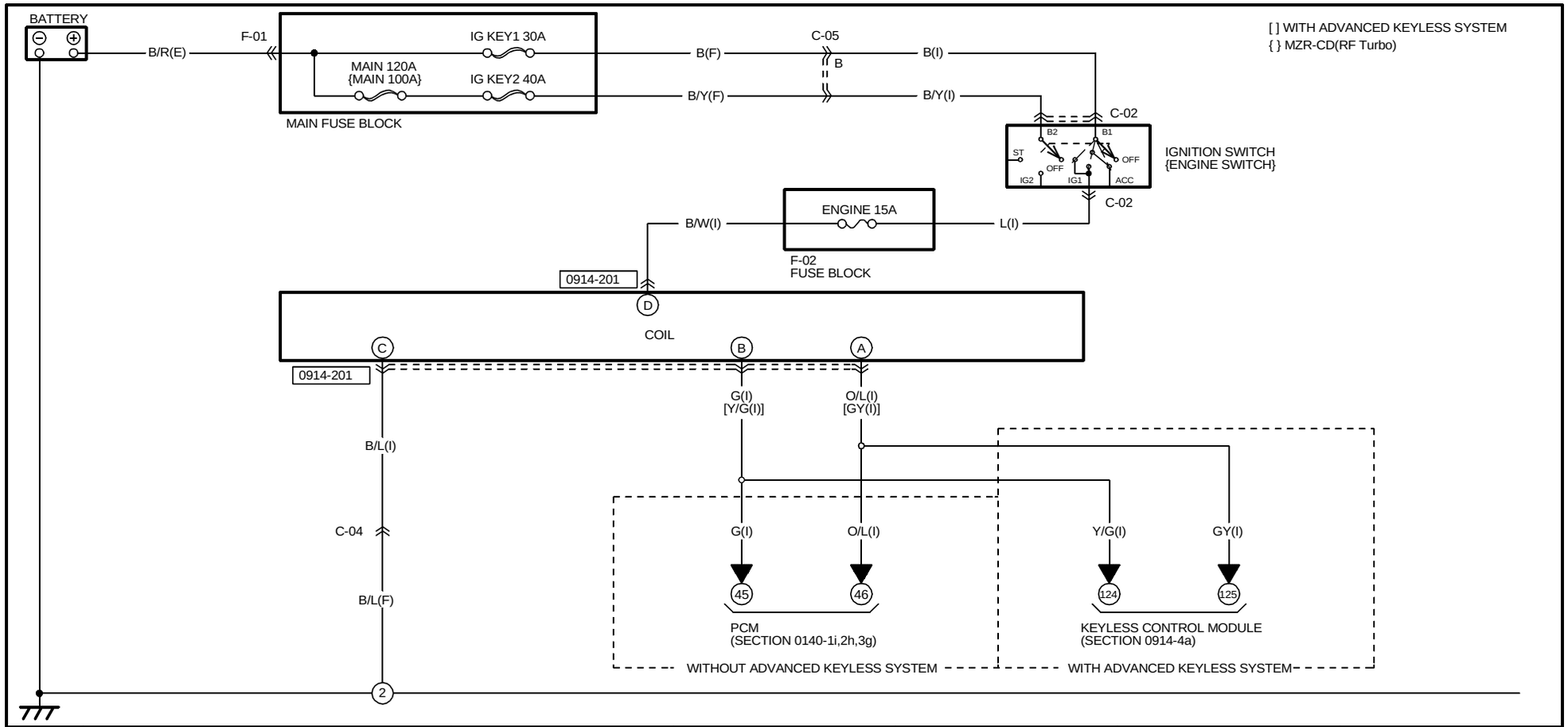

0914-201
COIL(I)

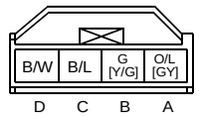

HARNESS SYMBOL : (F) (E) (D) (R)

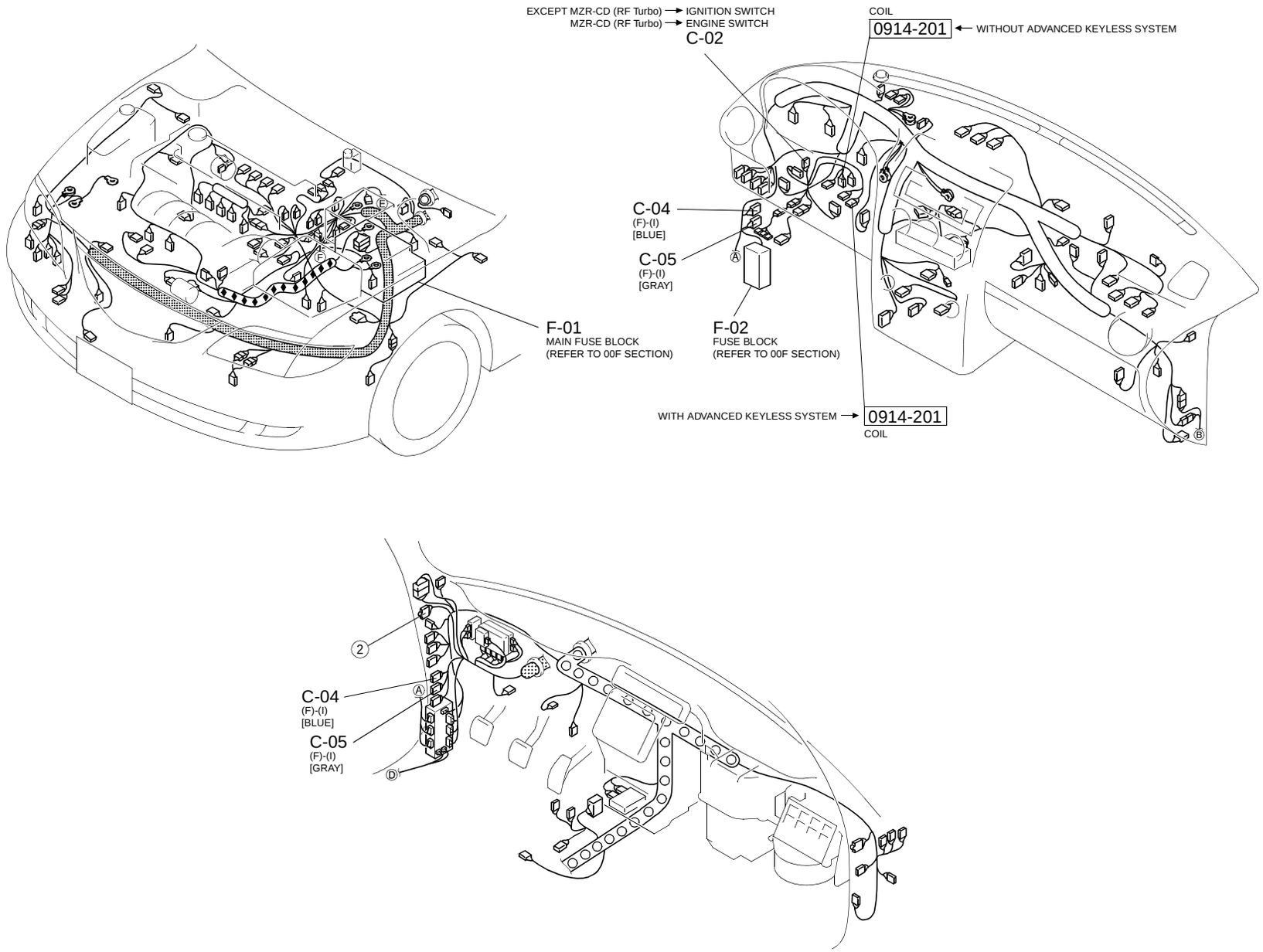

KEYLESS ENTRY SYSTEM (WITHOUT ADVANCED KEYLESS SYSTEM)

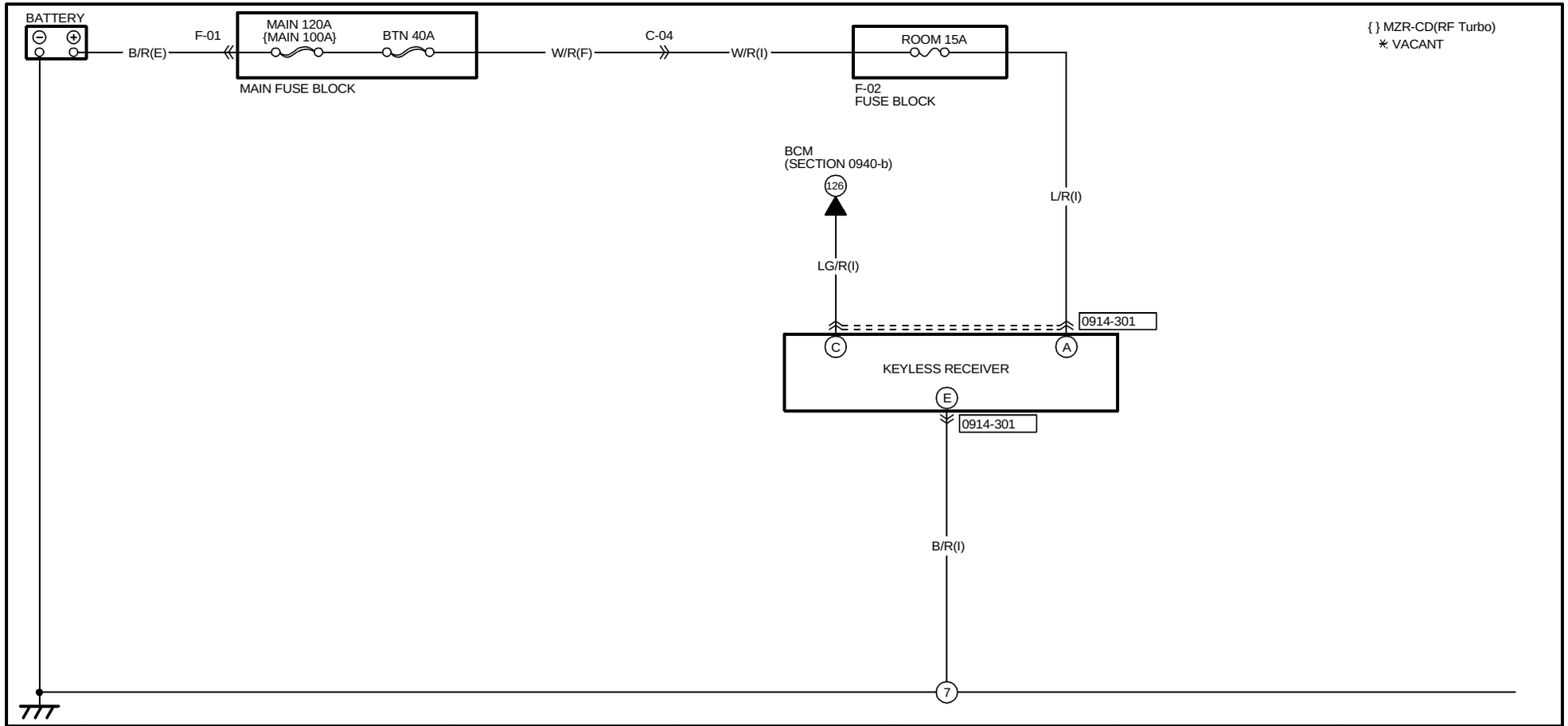

0914-301
KEYLESS RECEIVER(I)

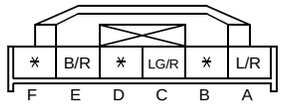

HARNESS SYMBOL : (F) (E) (D) (R)

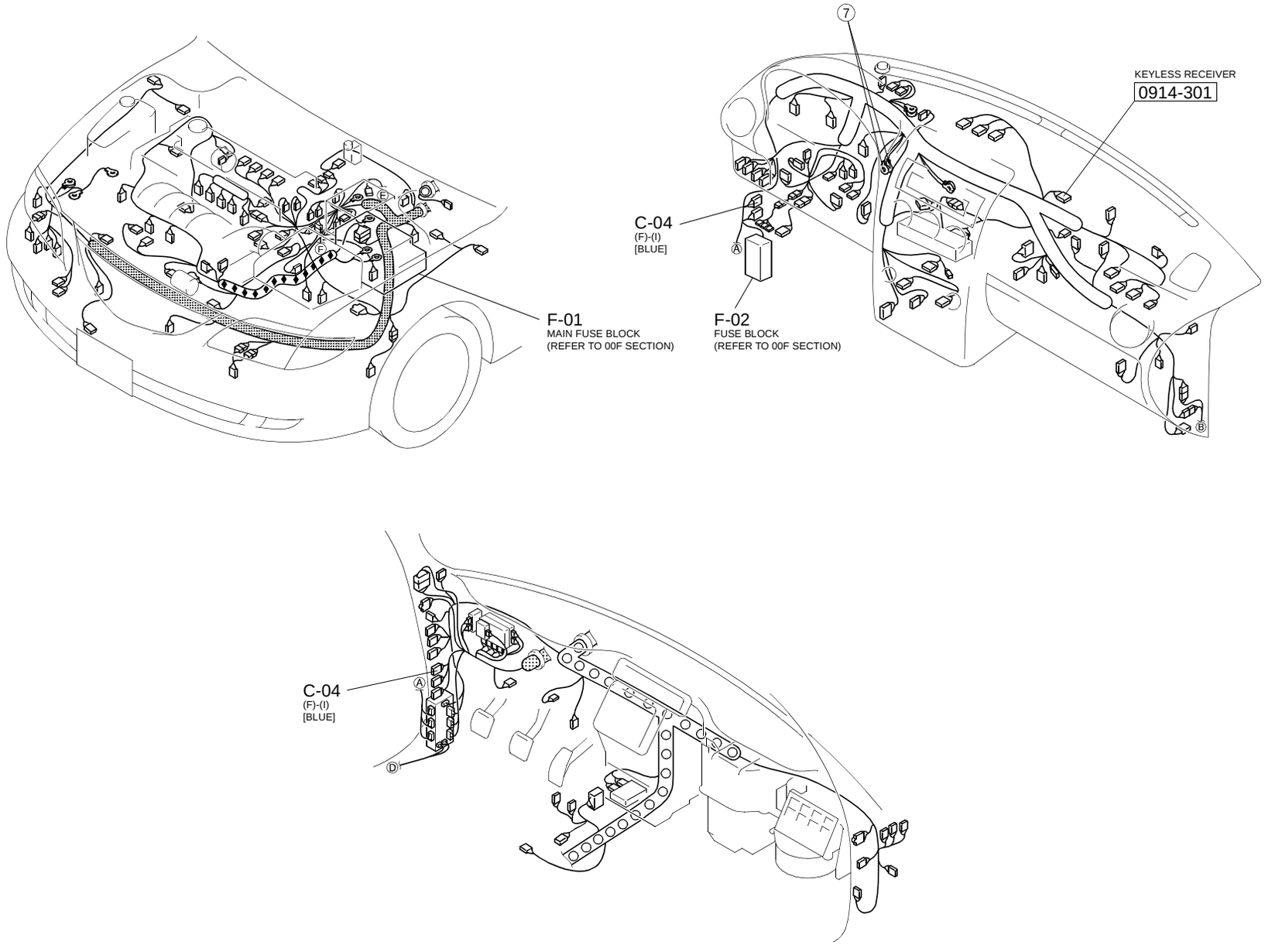

KEYLESS ENTRY SYSTEM (WITH ADVANCED KEYLESS SYSTEM)

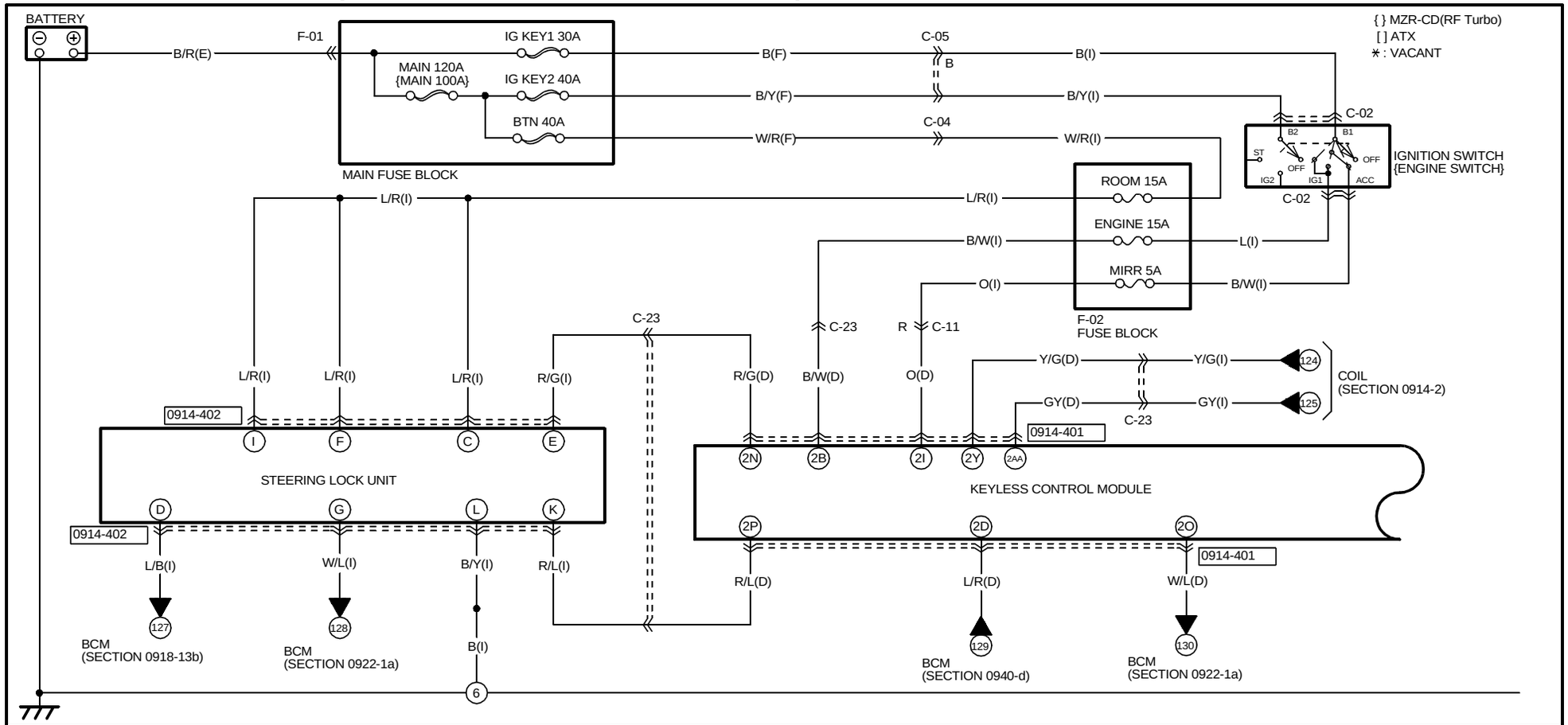

0914-401
KEYLESS CONTROL MODULE(D)

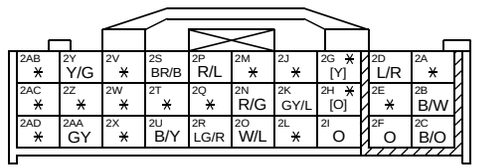

0914-402
STEERING LOCK UNIT(I)

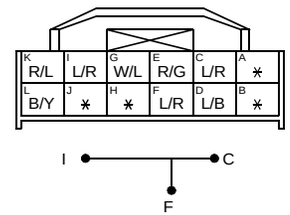

HARNESS SYMBOL : (F) (E) (D) (R)

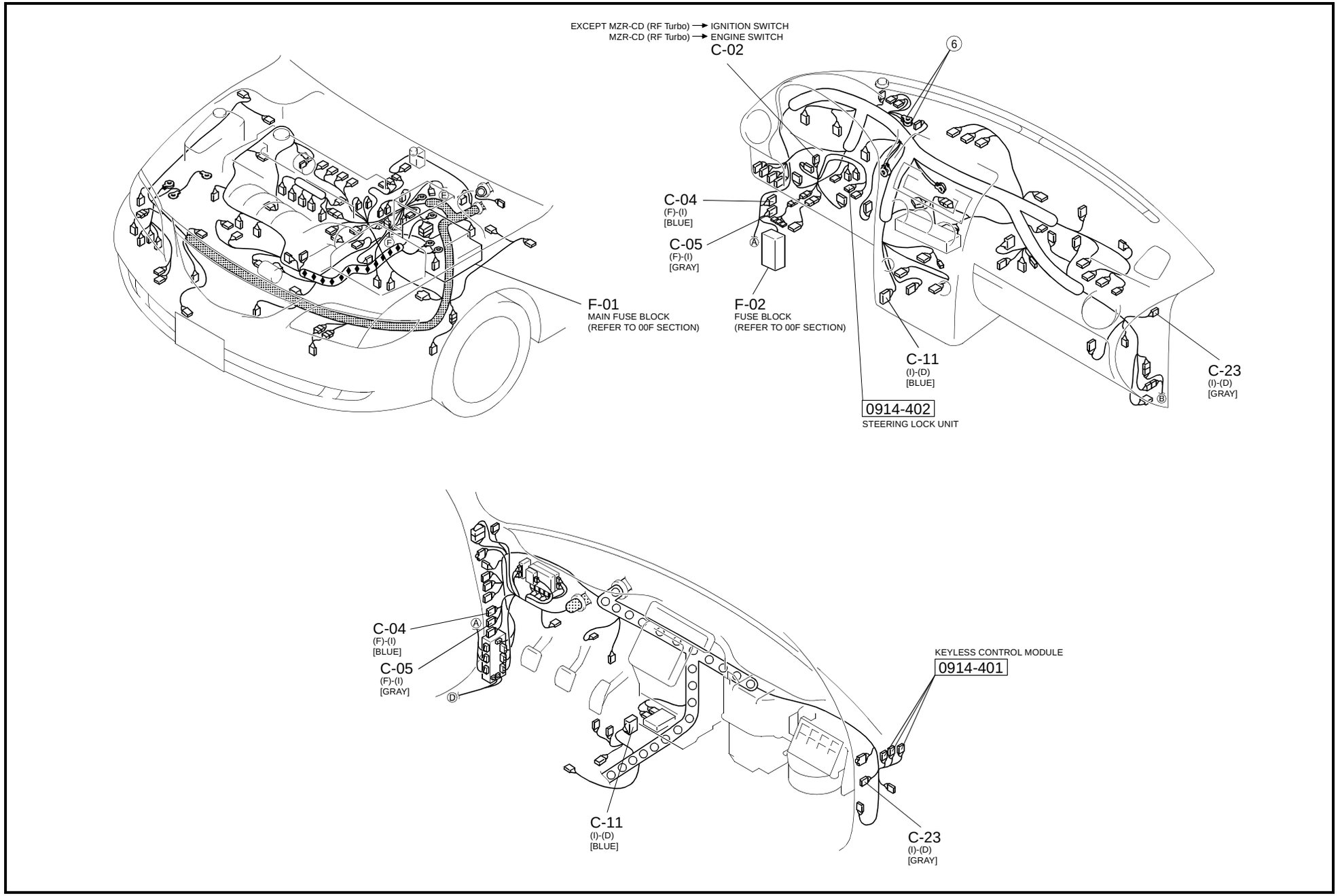

KEYLESS ENTRY SYSTEM (WITH ADVANCED KEYLESS SYSTEM)

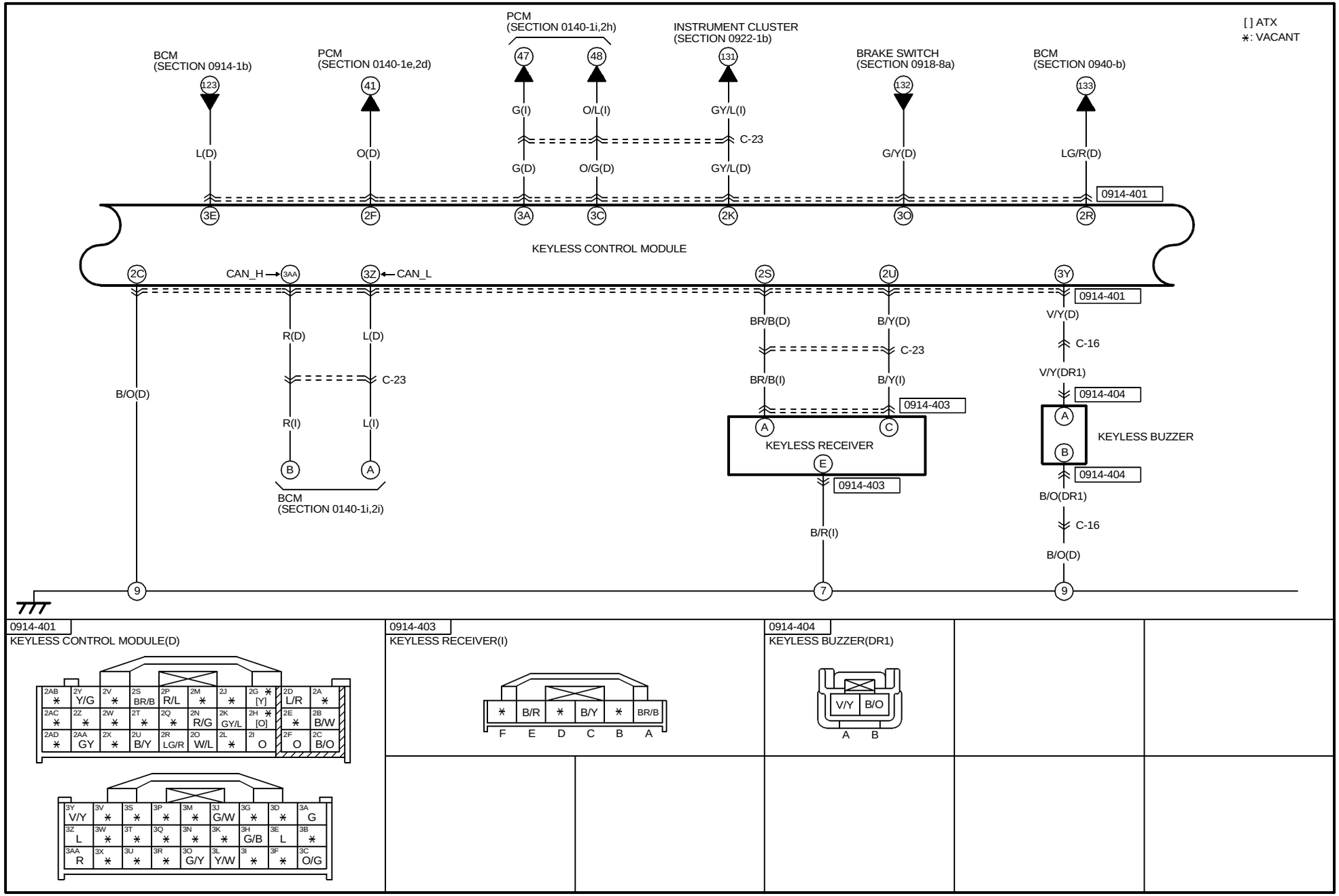

0914-401
KEYLESS CONTROL MODULE(D)

2AB ∗	2Y Y/G	2V ∗	2S BR/B	2P R/L	2M ∗	2J ∗	2G ∗ [Y]	2D L/R	2A ∗
2AC ∗	2Z ∗	2W ∗	2T ∗	2Q ∗	2N R/G	2K GY/L	2H ∗ [O]	2E ∗	2B B/W
2AD ∗	2AA GY	2X ∗	2U B/Y	2R LG/R	2O W/L	2L ∗	2I O	2F O	2C B/O

3Y V/Y	3V ∗	3S ∗	3P ∗	3M ∗	3J G/W	3G ∗	3D ∗	3A G
3Z L	3W ∗	3T ∗	3Q ∗	3N ∗	3K ∗	3H G/B	3E L	3B ∗
3AA R	3X ∗	3U ∗	3R ∗	3O G/Y	3L Y/W	3I ∗	3F ∗	3C O/G

0914-403
KEYLESS RECEIVER(I)

∗	B/R	∗	B/Y	∗	BR/B
F	E	D	C	B	A

0914-404
KEYLESS BUZZER(DR1)

V/Y	B/O
A	B

HARNESS SYMBOL : (F) (E) (D) (R)

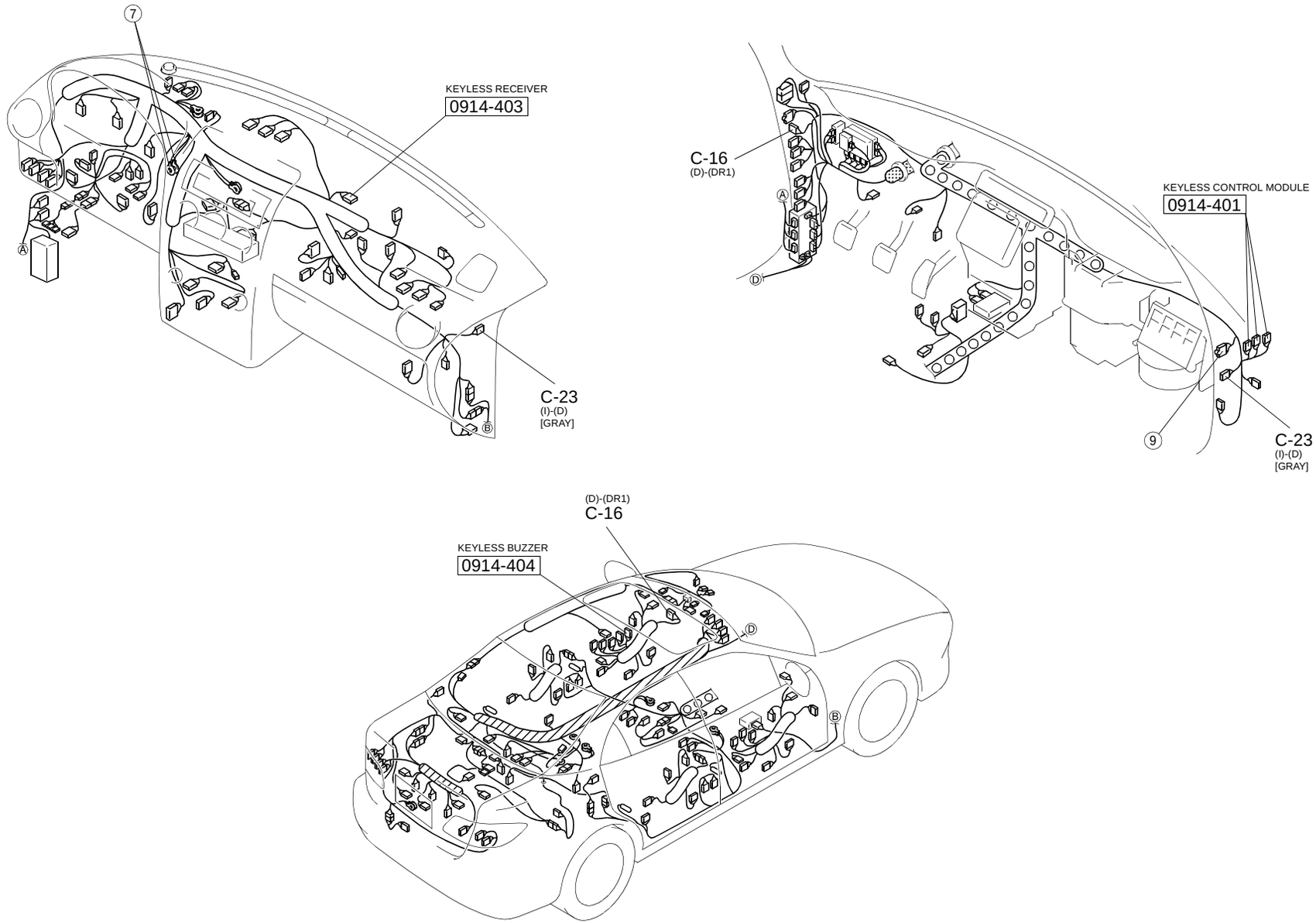

KEYLESS ENTRY SYSTEM (WITH ADVANCED KEYLESS SYSTEM)

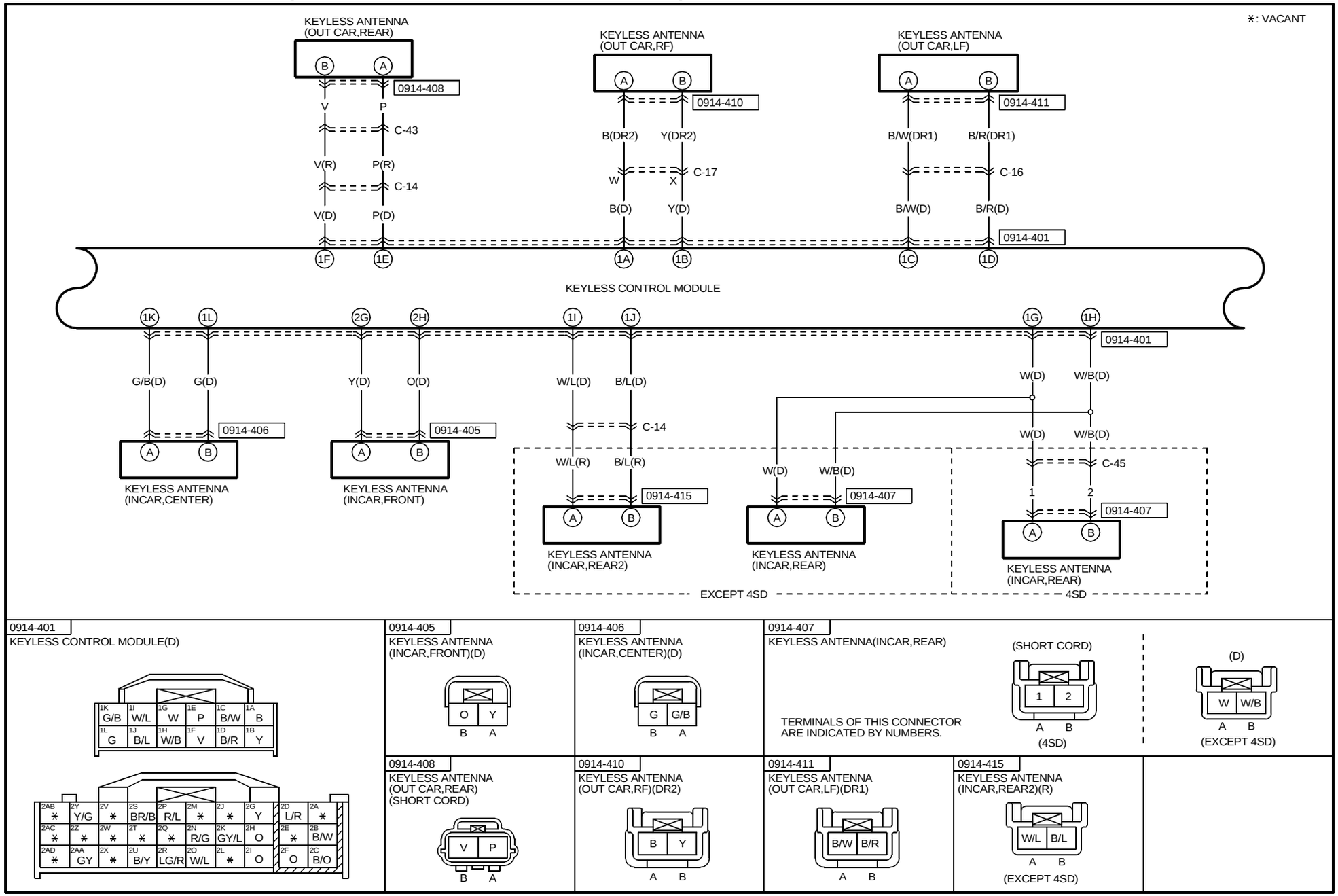

HARNESS SYMBOL : (F) (E) (D) (R)

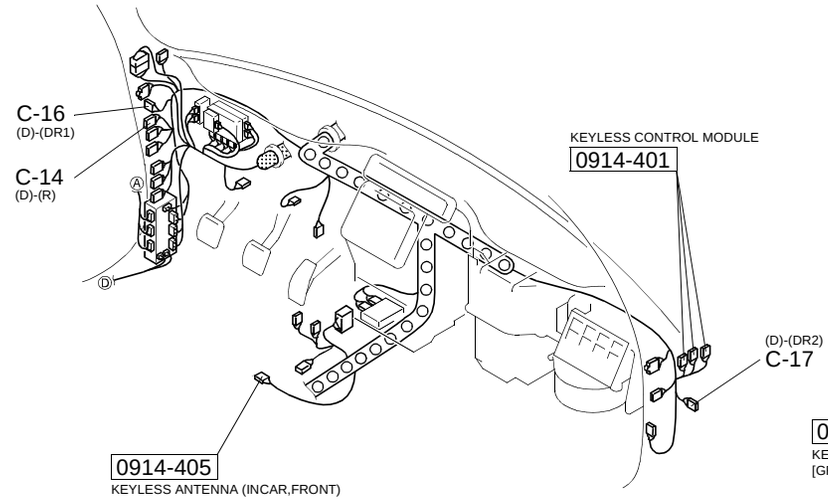

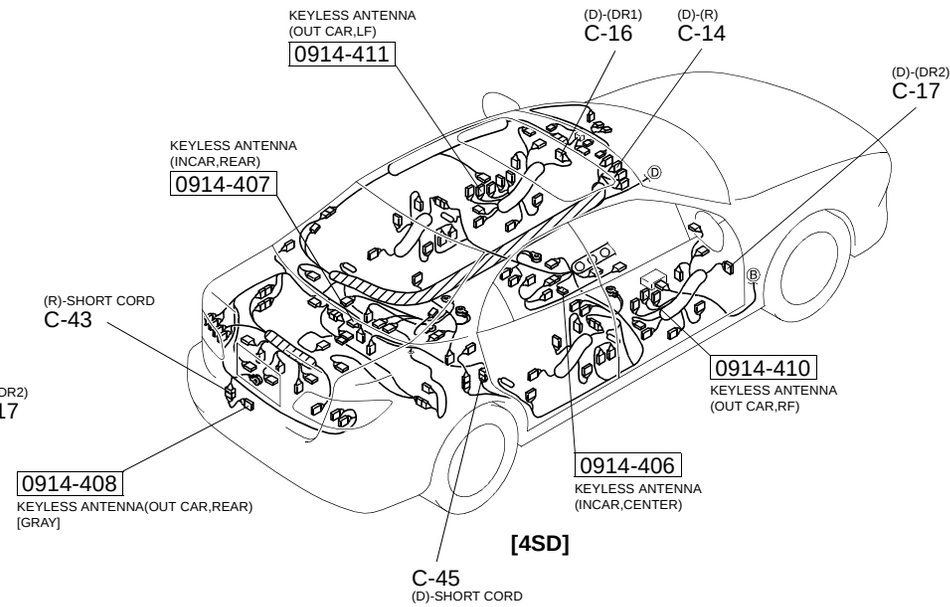

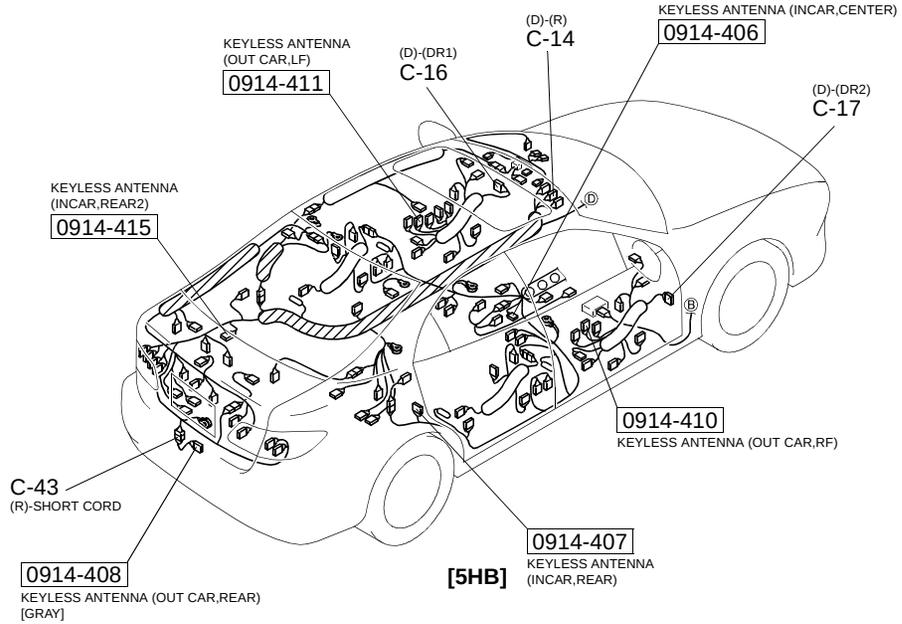

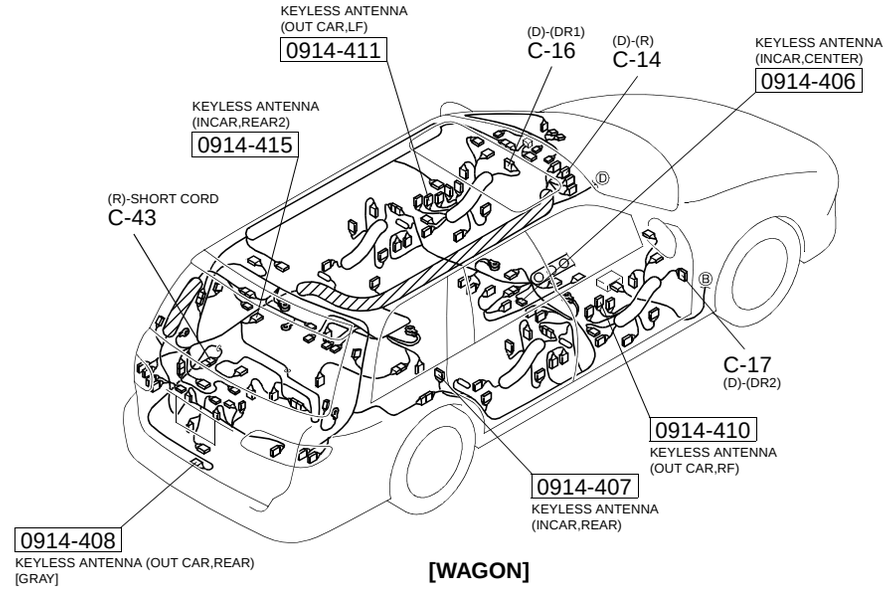

KEYLESS ENTRY SYSTEM (WITH ADVANCED KEYLESS SYSTEM)

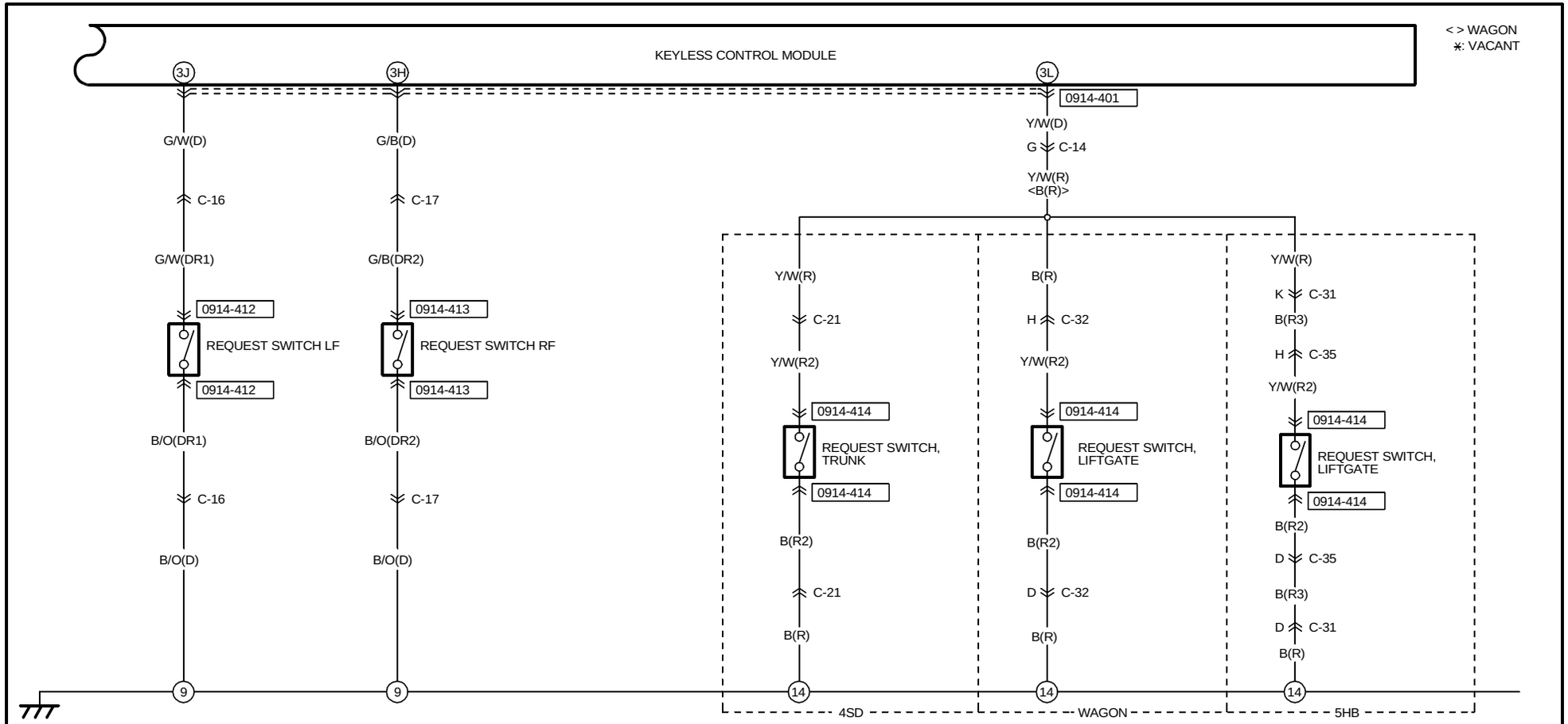

0914-401
KEYLESS CONTROL MODULE(D)

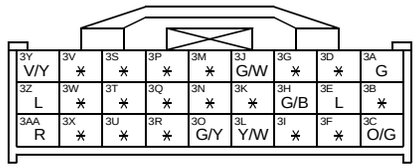

0914-412
REQUEST SWITCH LF(DR1)

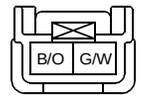

0914-413
REQUEST SWITCH RF(DR2)

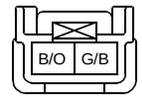

0914-414
REQUEST SWITCH,TRUNK(R2) ← 4SD
REQUEST SWITCH,LIFTGATE(R2) ← EXCEPT 4SD

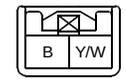

HARNESS SYMBOL : (F) (E) (D) (R)

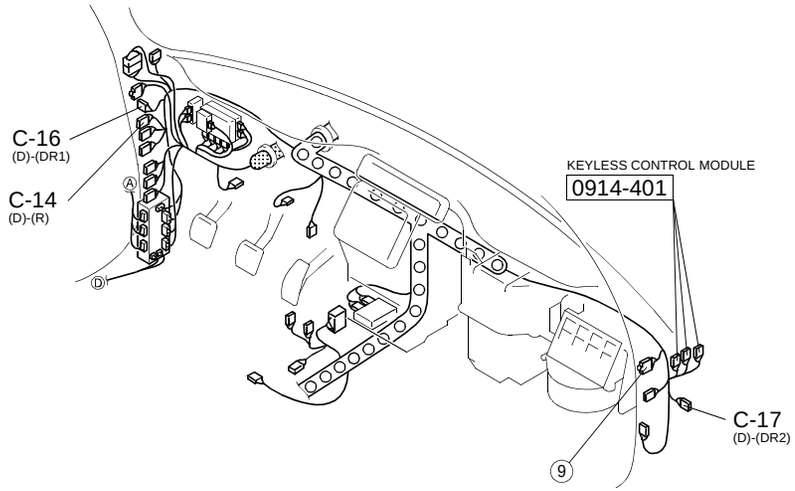

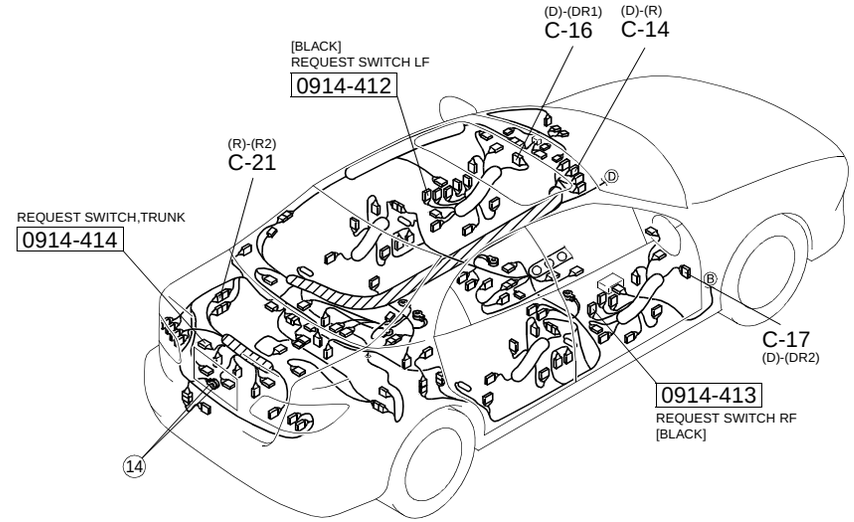

[4SD]

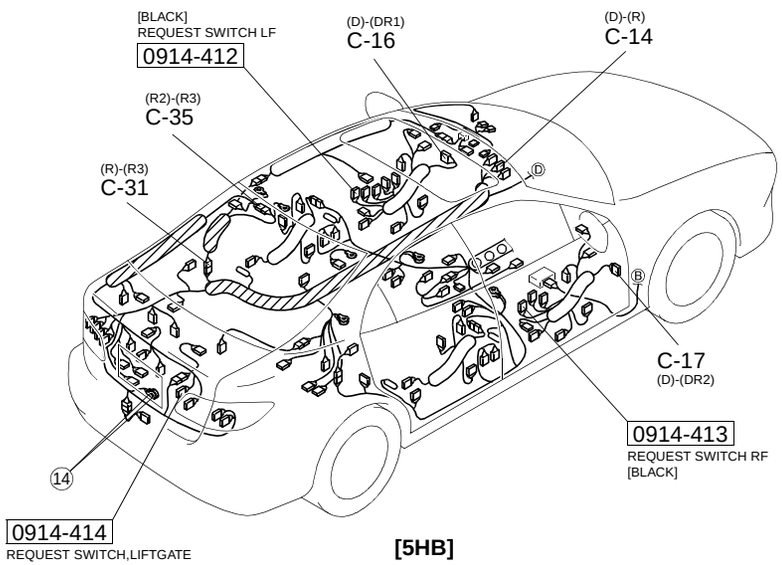

[5HB]

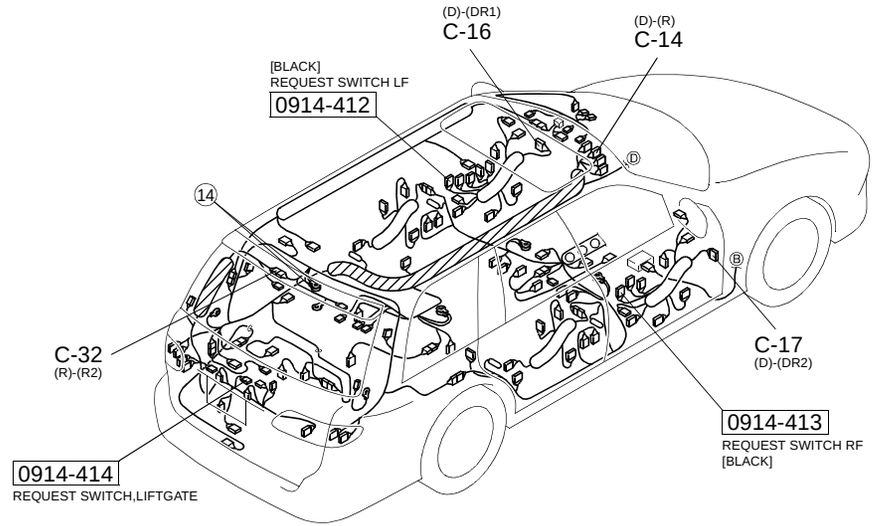

[WAGON]

[ ] WAGON
#: WITHOUT AUTO LIGHT SYSTEM, WITHOUT RUNNING LIGHT SYSTEM
&: L3 Turbo
▲: WITH ADVANCED KEYLESS SYSTEM
▼: ATX/4WD
□: WITH HEADLIGHT AUTO LEVELING SYSTEM
✳: VACANT

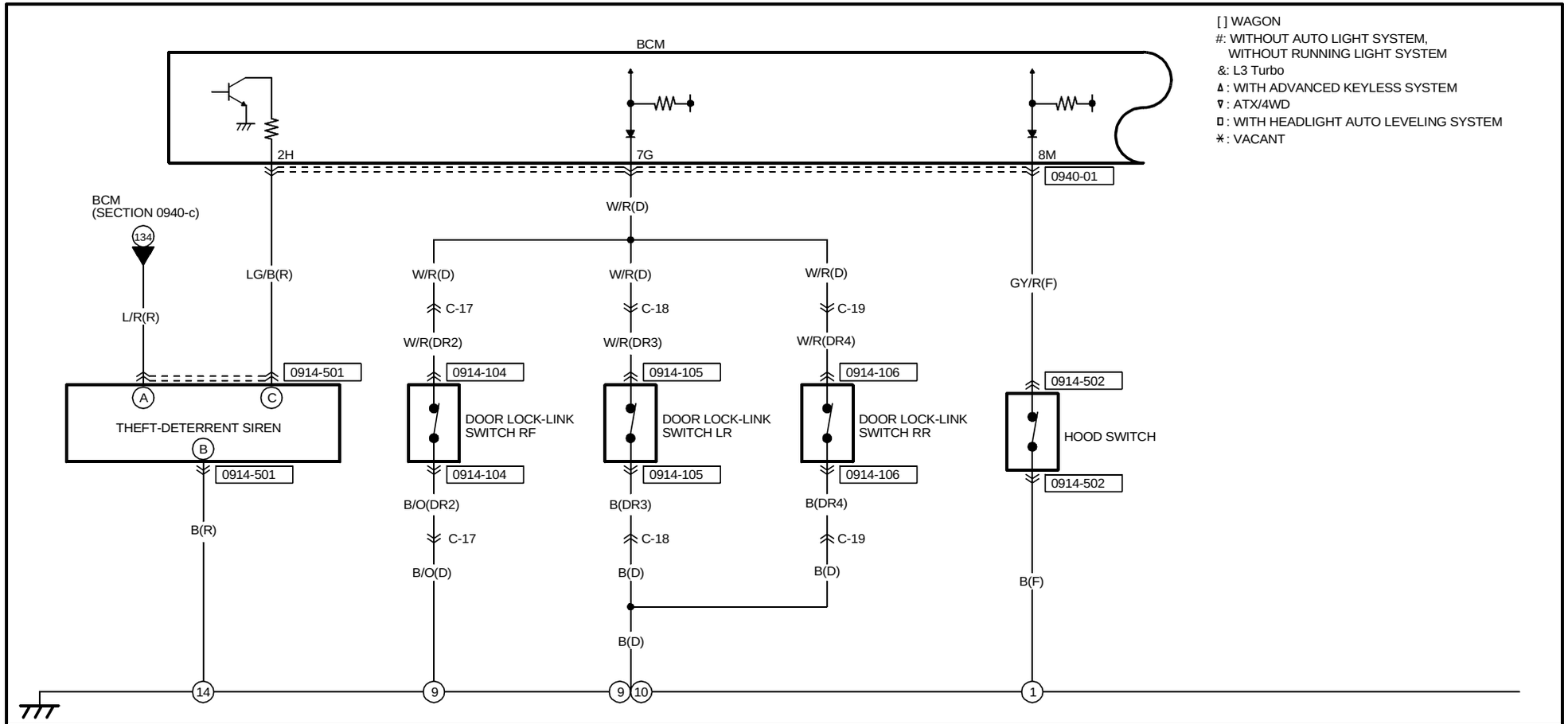

0914-501 THEFT-DETERRENT SIREN(R)

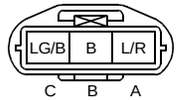

0914-502 HOOD SWITCH(F)

0914-104 DOOR LOCK-LINK SWITCH RF(DR2)

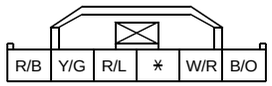

0914-105 DOOR LOCK-LINK SWITCH LR(DR3)

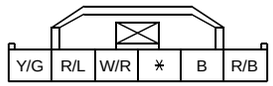

0914-106 DOOR LOCK-LINK SWITCH RR(DR4)

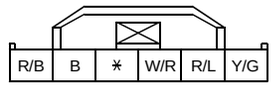

0940-01 BCM

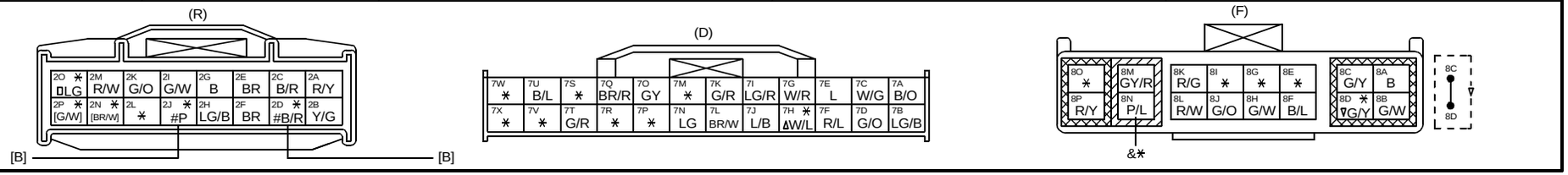

HARNESS SYMBOL : (F) (E) (D) (R)

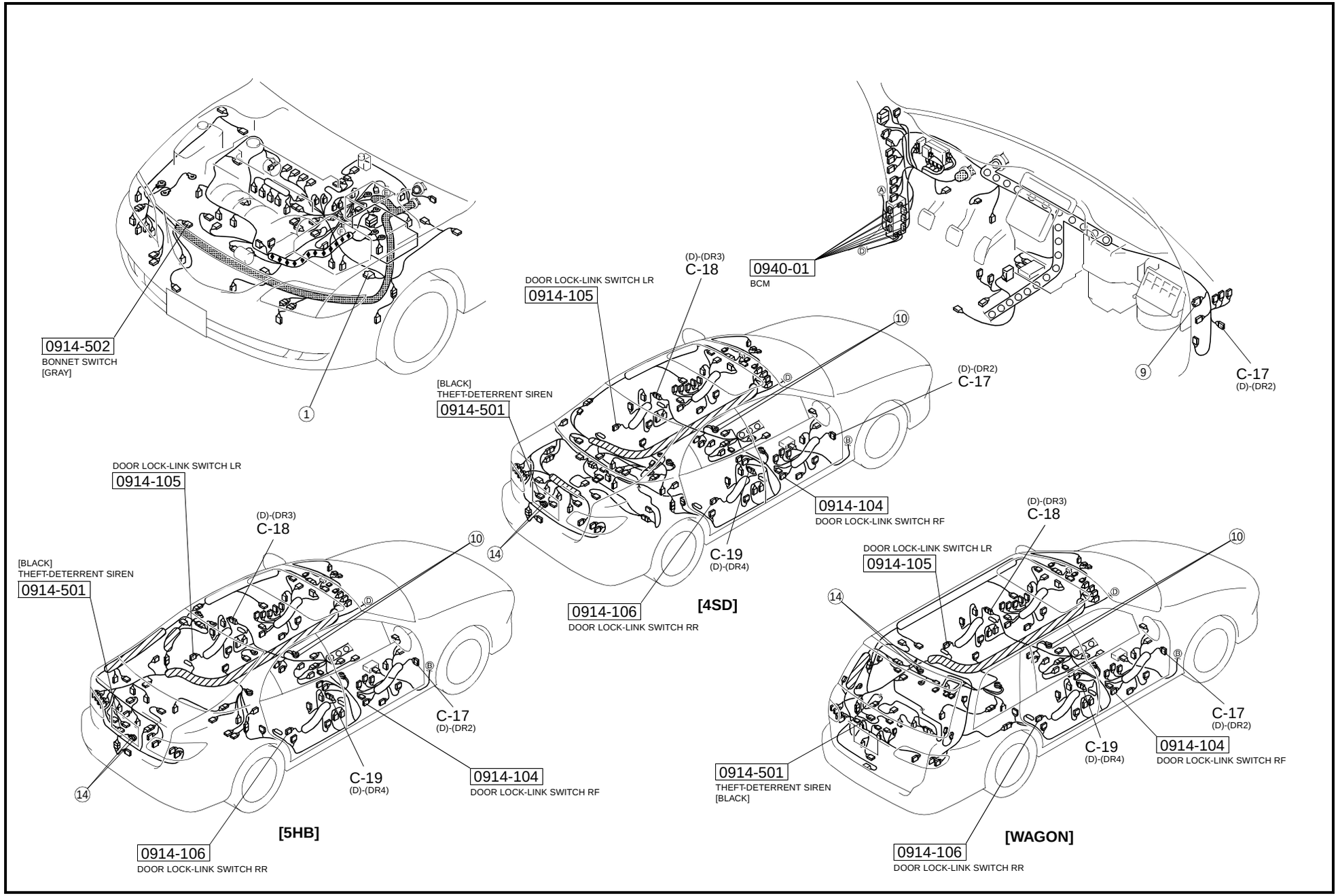

[ ] WAGON
#: WITHOUT AUTO LIGHT SYSTEM, WITHOUT RUNNING LIGHT SYSTEM
▲: WITH ADVANCED KEYLESS SYSTEM
▯: WITH HEADLIGHT AUTO LEVELING SYSTEM
✱: VACANT

BCM
7K
7L
2N
2P
0940-01
G/R(D)
BR/W(D)
C-40
A
B/O
G/R
BR/W
BR/W(R)
G/W(R)
B(D)
B/O
G/R
BR/W
0914-505
B
G/R
G/B
0914-503
0914-503
0914-504
B(R)
C
B
A
INTRUDER SENSOR(FRONT)
INTRUDER SENSOR(FRONT)
INTRUDER SENSOR(REAR)
WITHOUT SUNROOF
WITH SUNROOF
WAGON
9
12
19

0914-503
INTRUDER SENSOR(FRONT)(SHORT CORD)

BR/W	G/R	B/O
A	B	C

(WITHOUT SUNROOF)

G/B	G/R	B
A	B	C

(WITH SUNROOF)

0914-504
INTRUDER SENSOR(REAR)(R)

BR/W	G/W	B
A	B	C

(WAGON)

0914-505
SHORT CORD-SHORT CORD

(SHORT CORD)

BR/W	G/R	B/O

(SHORT CORD)

B	G/R	G/B

(WITH SUNROOF)

0940-01
BCM

(R)

2O ✱ ▯LG	2M R/W	2K G/O	2I G/W	2G B	2E BR	2C B/R	2A R/Y
2P ✱ [G/W]	2N ✱ [BR/W]	2L ✱	2J ✱ #P	2H LG/B	2F BR	2D ✱ #B/R	2B Y/G

[B] [B]

(D)

7W ✱	7U B/L	7S ✱	7Q BR/R	7O GY	7M ✱	7K G/R	7I LG/R	7G W/R	7E L	7C W/G	7A B/O
7X ✱	7V ✱	7T G/R	7R ✱	7P ✱	7N LG	7L BR/W	7J L/B	7H ✱ ▲W/L	7F R/L	7D G/O	7B LG/B

HARNESS SYMBOL : (F) (E) (D) (R)

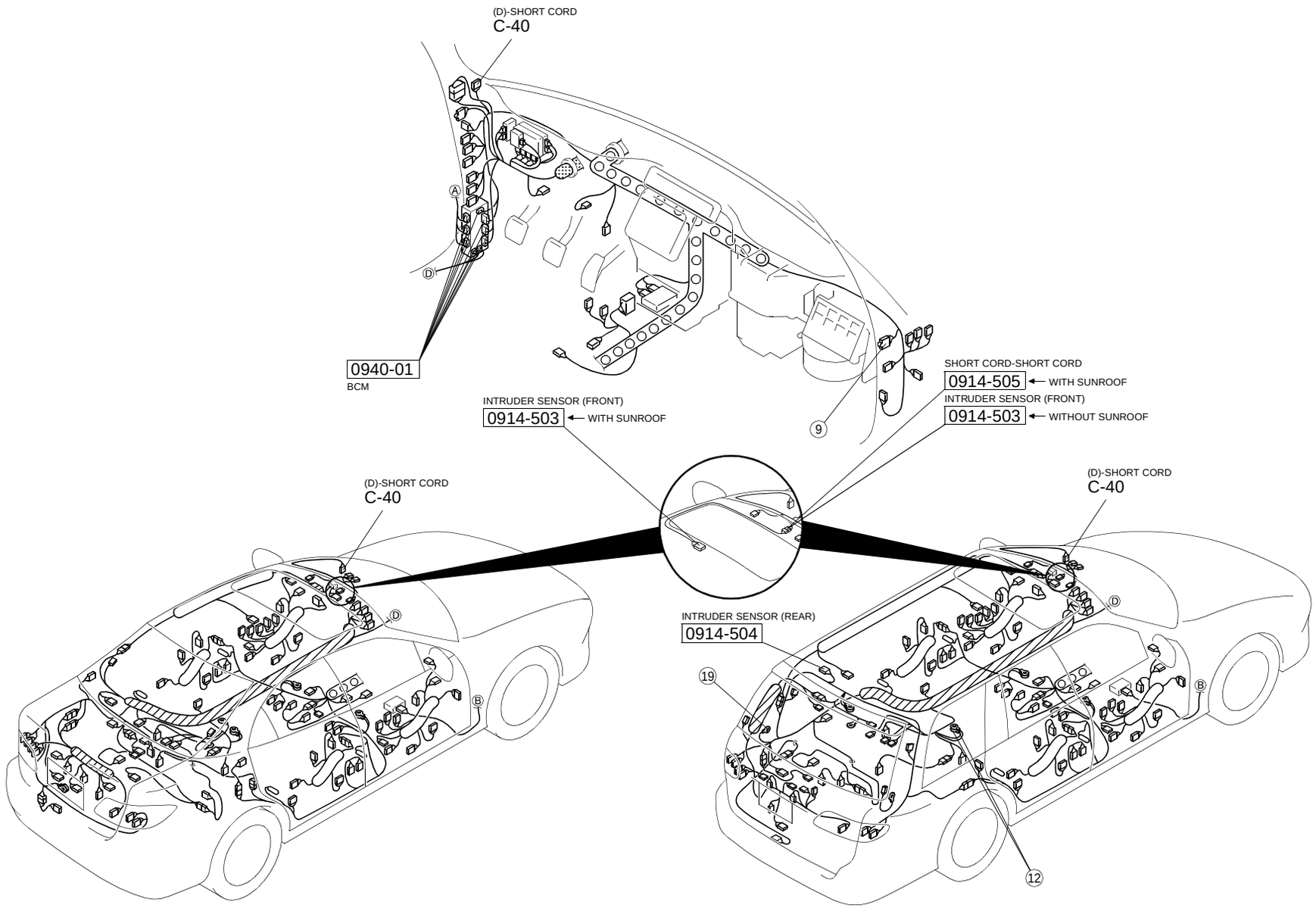

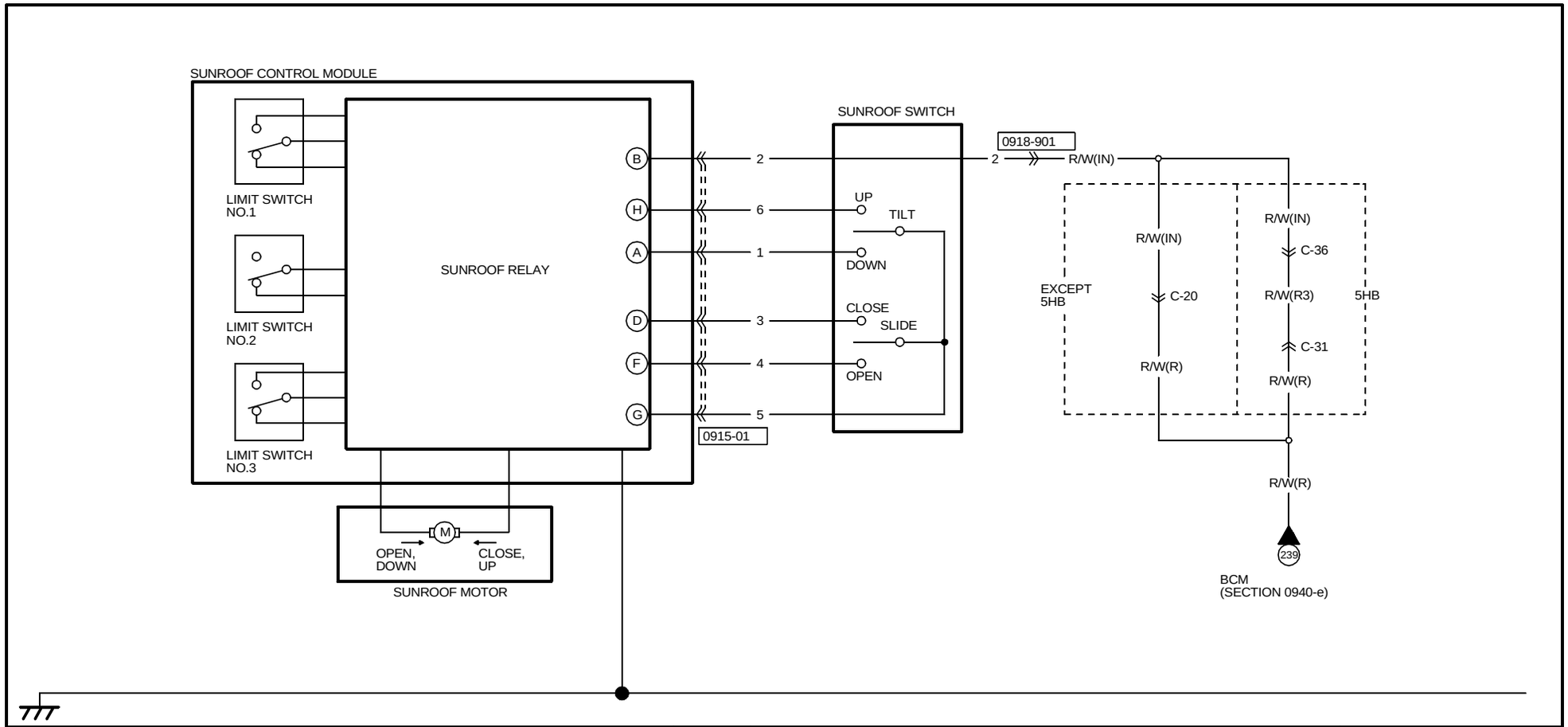

0915-01

SUNROOF CONTROL MODULE(SHORT CORD)

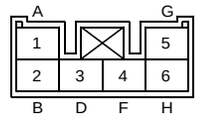

TERMINALS OF THIS CONNECTOR ARE INDICATED BY NUMBERS.

0918-901

INTERIOR LIGHT(IN)-SUNROOF SWITCH

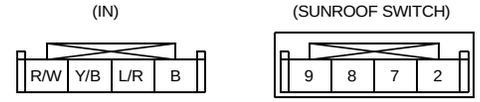

TERMINALS OF THIS CONNECTOR ARE INDICATED BY NUMBERS.

HARNESS SYMBOL : (F) (E) (D) (R)

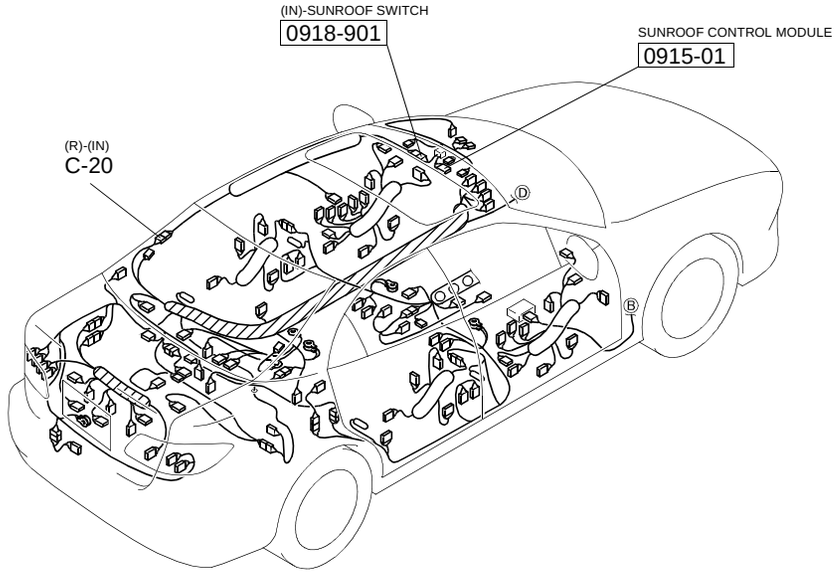

[4SD]

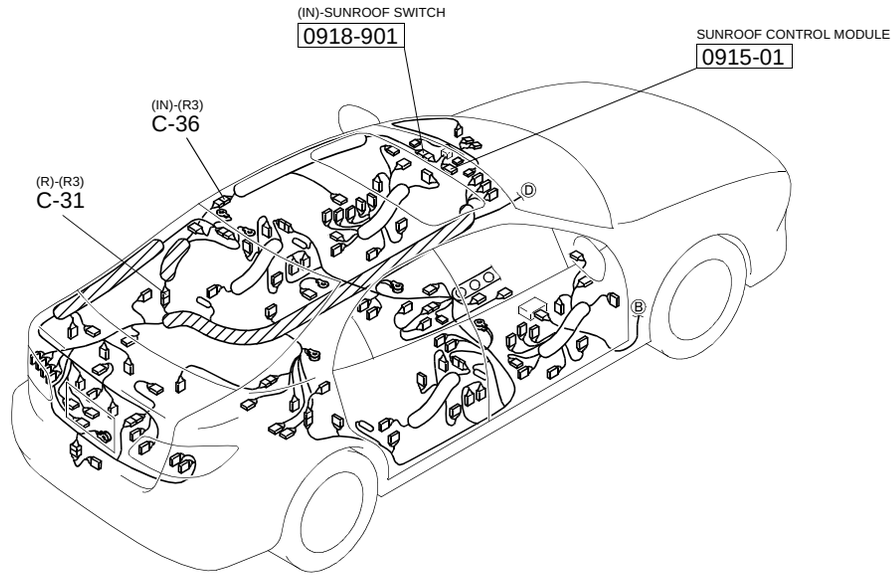

[5HB]

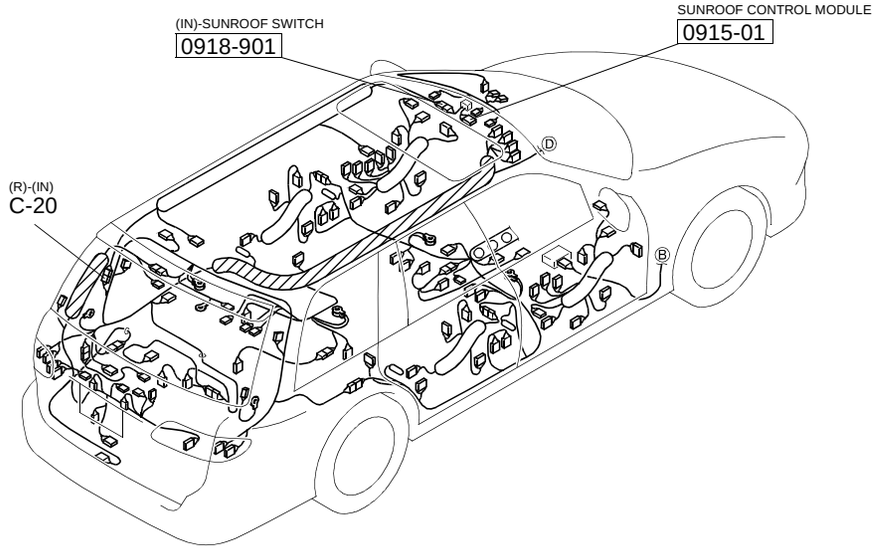

[WAGON]

HEADLIGHT (WITHOUT AUTO LIGHT SYSTEM, WITHOUT RUNNING LIGHT SYSTEM)

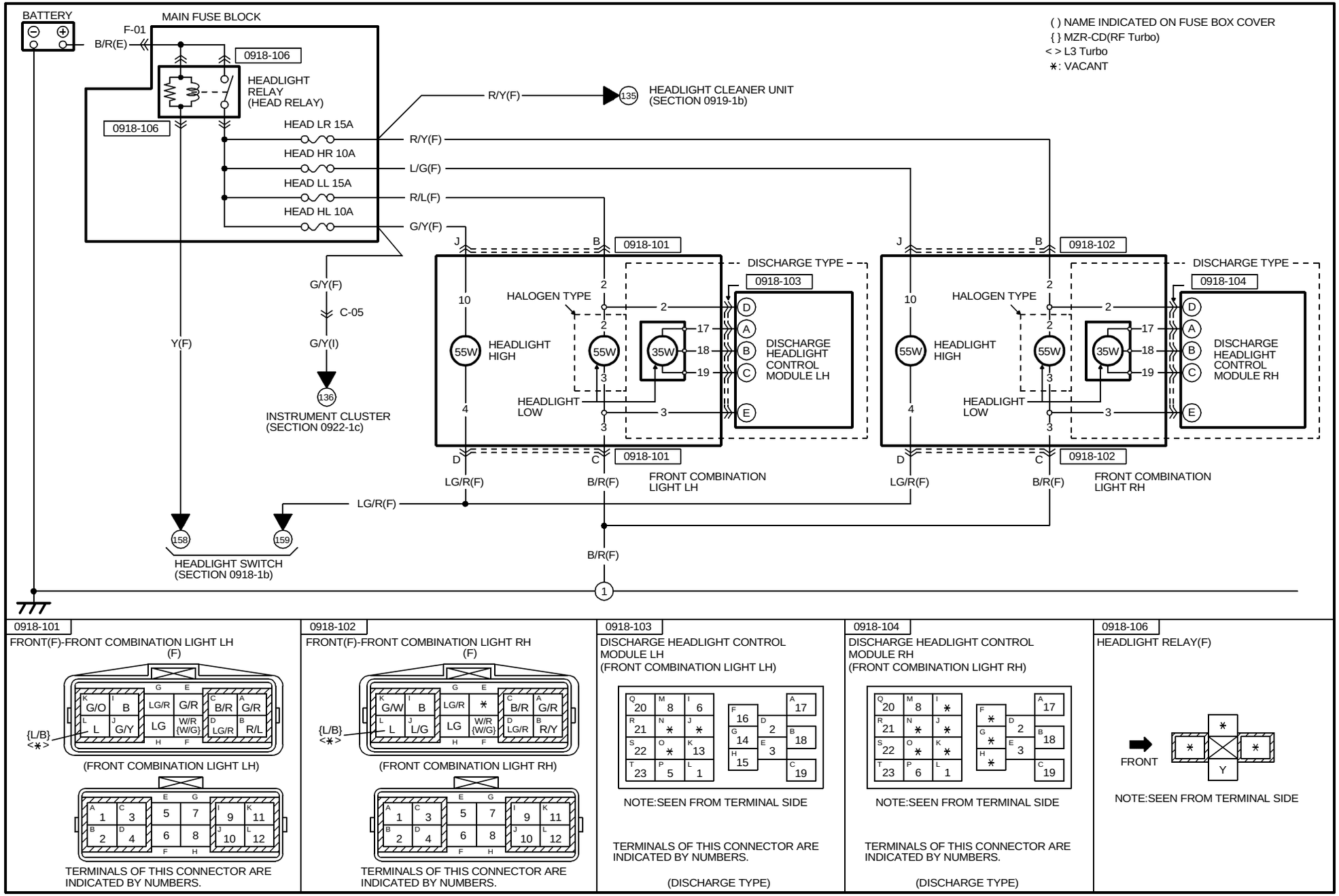

0918-101
FRONT(F)-FRONT COMBINATION LIGHT LH (F)

TERMINALS OF THIS CONNECTOR ARE INDICATED BY NUMBERS.

0918-102
FRONT(F)-FRONT COMBINATION LIGHT RH (F)

TERMINALS OF THIS CONNECTOR ARE INDICATED BY NUMBERS.

0918-103
DISCHARGE HEADLIGHT CONTROL MODULE LH (FRONT COMBINATION LIGHT LH)

NOTE:SEEN FROM TERMINAL SIDE

TERMINALS OF THIS CONNECTOR ARE INDICATED BY NUMBERS.

(DISCHARGE TYPE)

0918-104
DISCHARGE HEADLIGHT CONTROL MODULE RH (FRONT COMBINATION LIGHT RH)

NOTE:SEEN FROM TERMINAL SIDE

TERMINALS OF THIS CONNECTOR ARE INDICATED BY NUMBERS.

(DISCHARGE TYPE)

0918-106
HEADLIGHT RELAY(F)

NOTE:SEEN FROM TERMINAL SIDE

HARNESS SYMBOL : (F) (E) (D) (R)

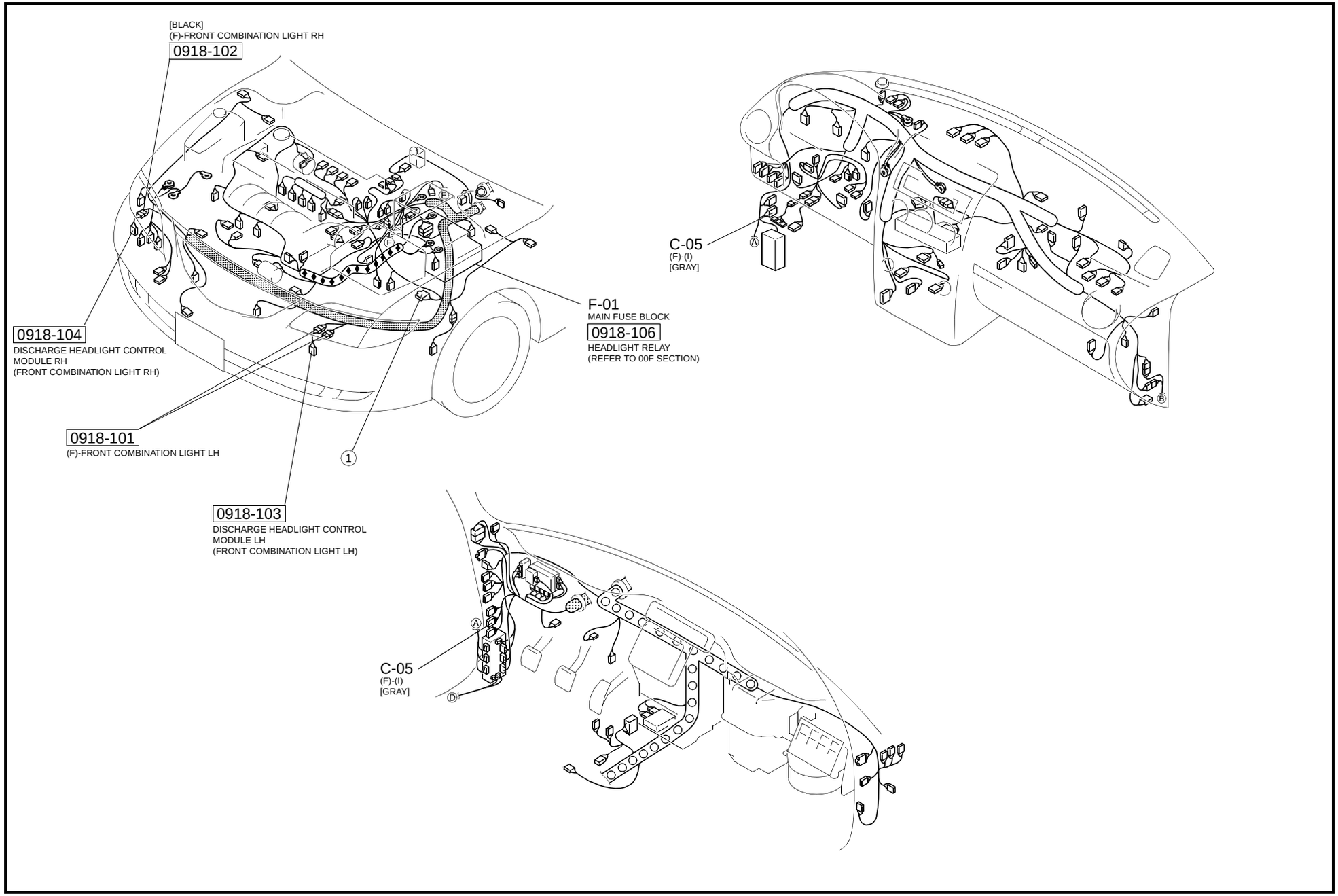

HEADLIGHT (WITHOUT AUTO LIGHT SYSTEM, WITHOUT RUNNING LIGHT SYSTEM)

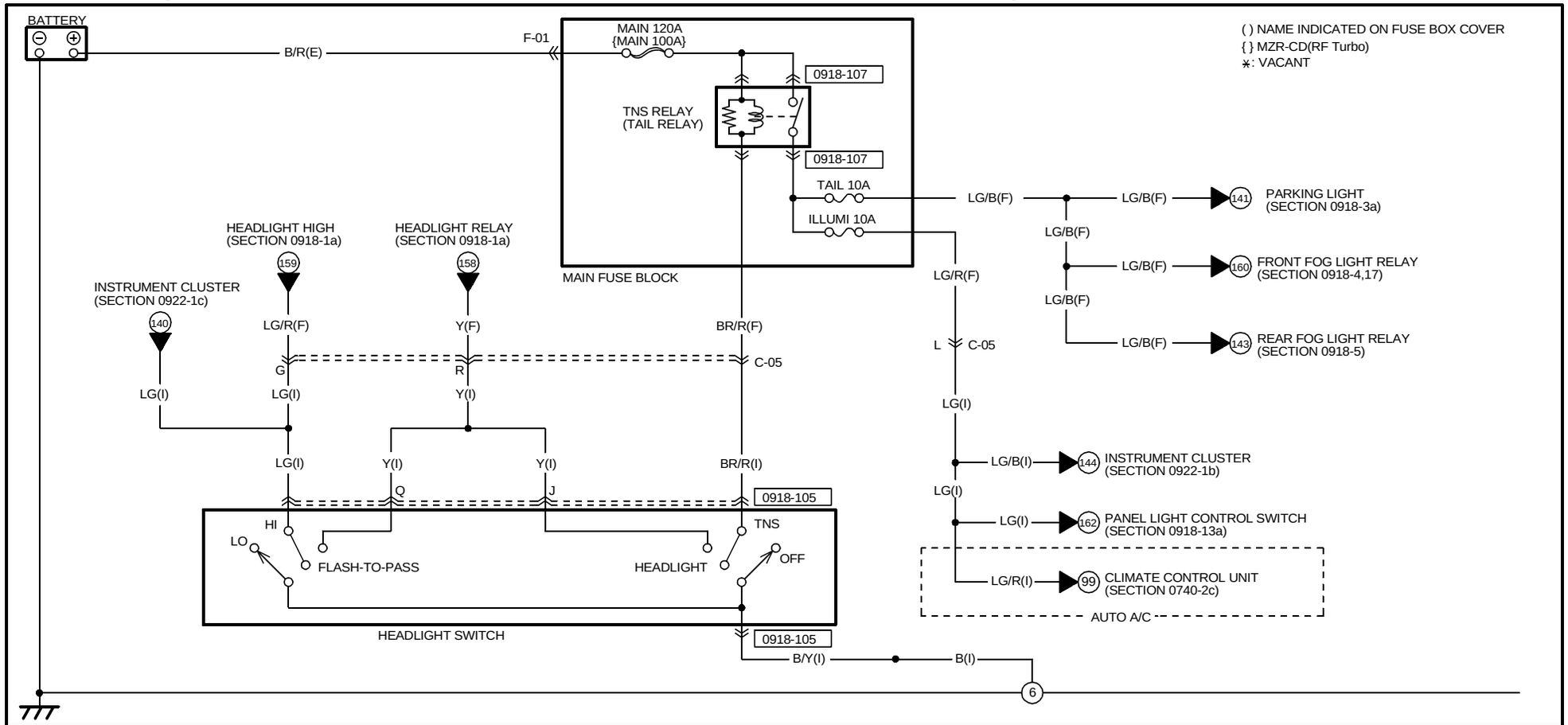

0918-105
HEADLIGHT SWITCH(I)

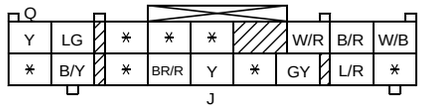

0918-107
TNS RELAY(F)

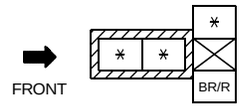

NOTE:SEEN FROM TERMINAL SIDE

HARNESS SYMBOL : (F) (E) (D) (R)

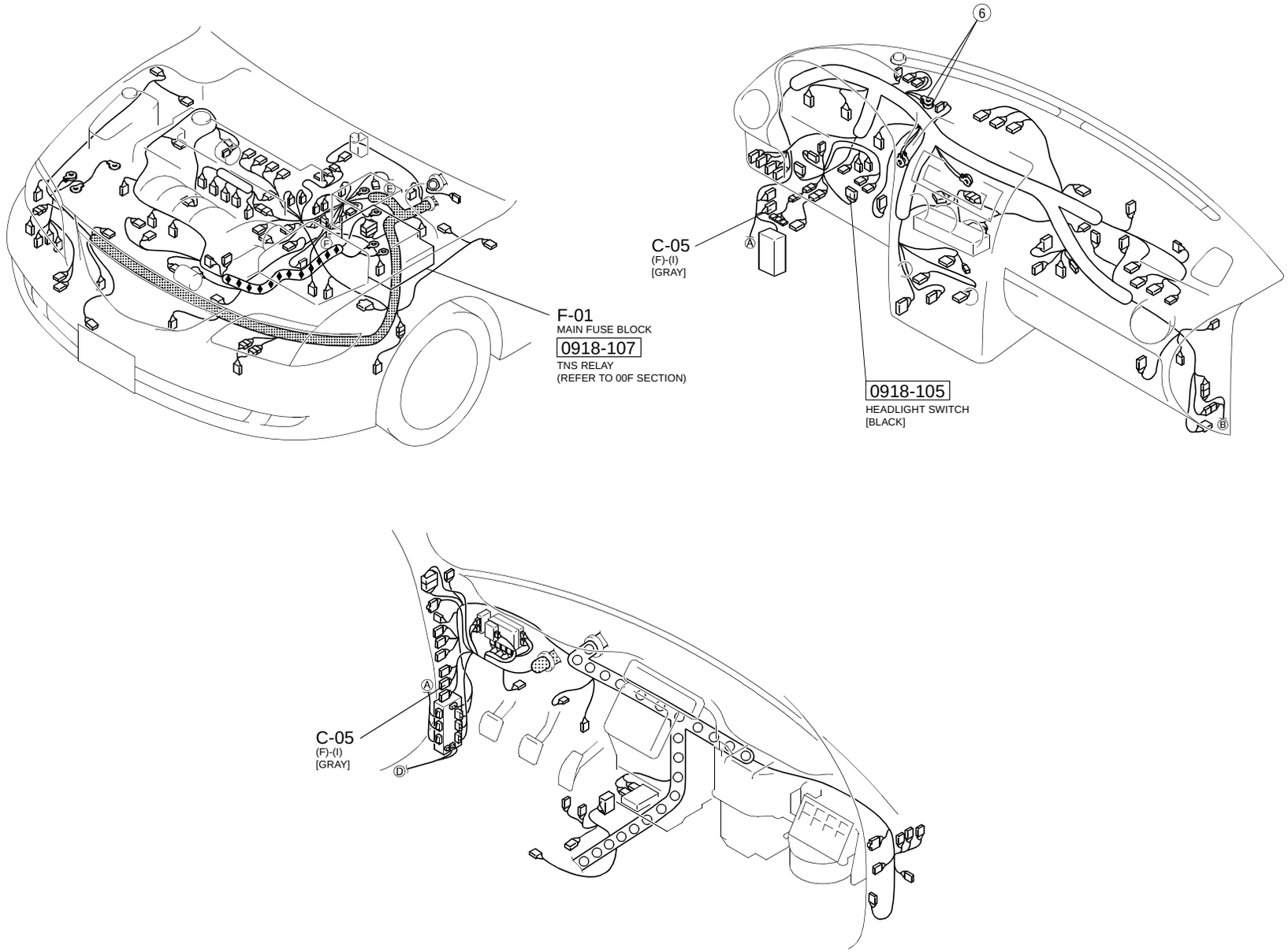

HEADLIGHT (WITH AUTO LIGHT SYSTEM and/or WITH RUNNING LIGHT SYSTEM:EXCEPT L3 Turbo)

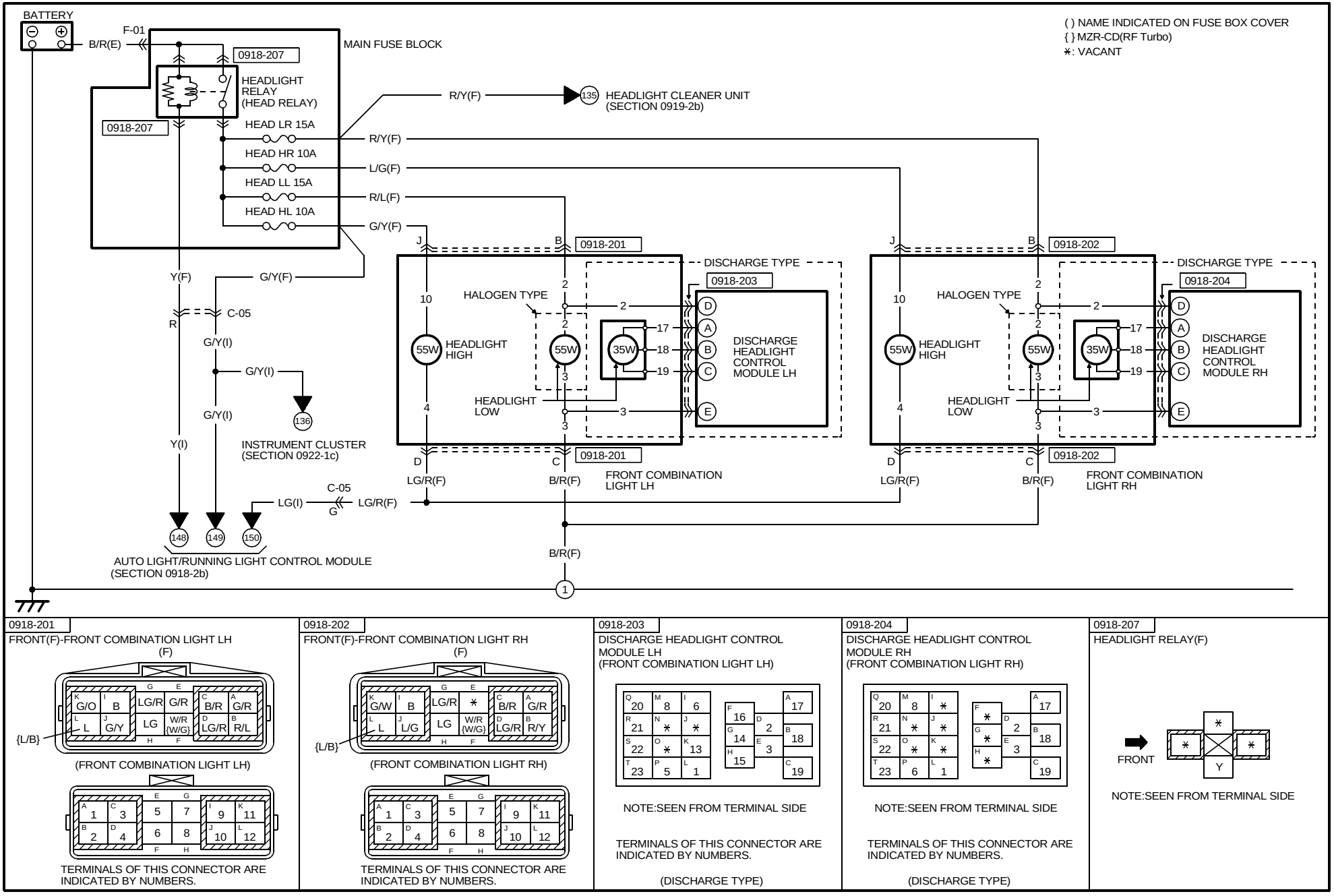

https://www.MyCarManual.com

HARNESS SYMBOL : (F) (E) (D) (R)

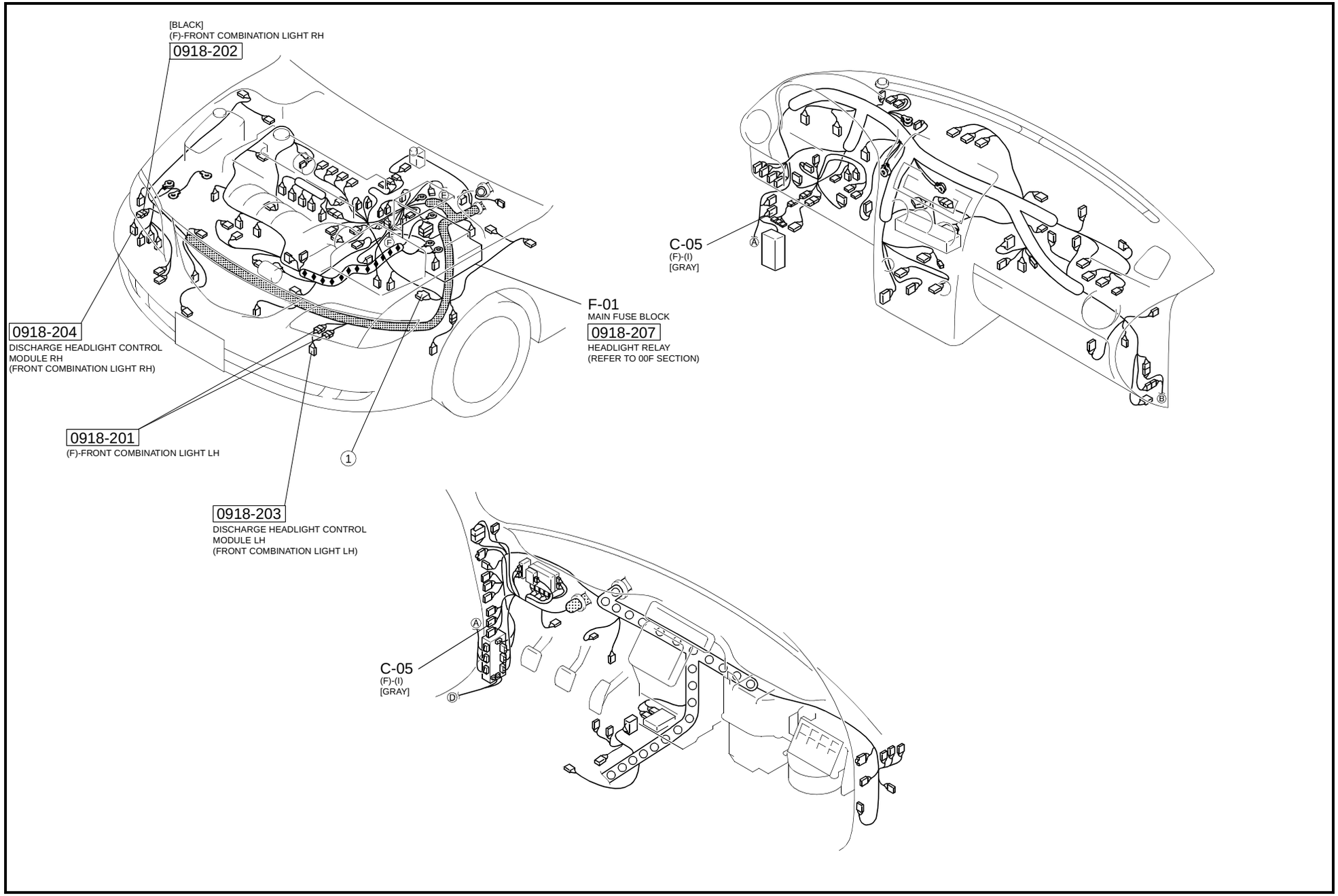

HEADLIGHT (WITH AUTO LIGHT SYSTEM and/or WITH RUNNING LIGHT SYSTEM:EXCEPT L3 Turbo)

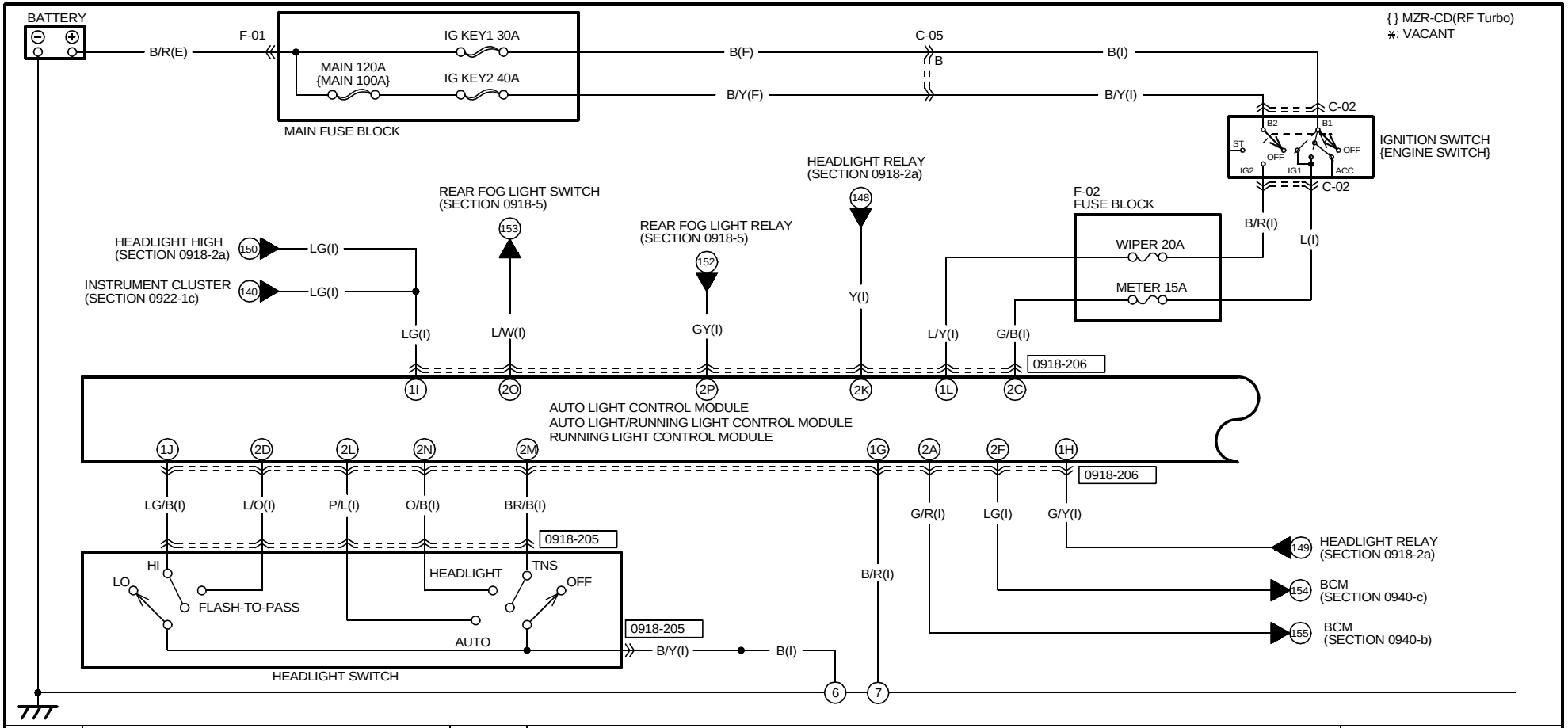

0918-205
HEADLIGHT SWITCH(I)

L/O	LG/B	∗	∗	∗		W/R	B/R	W/B
∗	B/Y	∗	BR/B	O/B	P/L	L/W	L/Y	∗

0918-206
AUTO LIGHT CONTROL MODULE
AUTO LIGHT/RUNNING LIGHT CONTROL MODULE
RUNNING LIGHT CONTROL MODULE(I)

1K O/L	1I LG	1G B/R	1E LG	1C Y/R	1A V
1L L/Y	1J LG/B	1H G/Y	1F B/LG	1D V/G	1B GY/B

2O L/W	2M BR/B	2K Y	2I L/R	2G BR/R	2E V/W	2C G/B	2A G/R
2P GY	2N O/B	2L P/L	2J L/Y	2H V/R	2F LG	2D L/O	2B V/Y

https://www.MyCarManual.com

HARNESS SYMBOL : (F) (E) (D) (R)

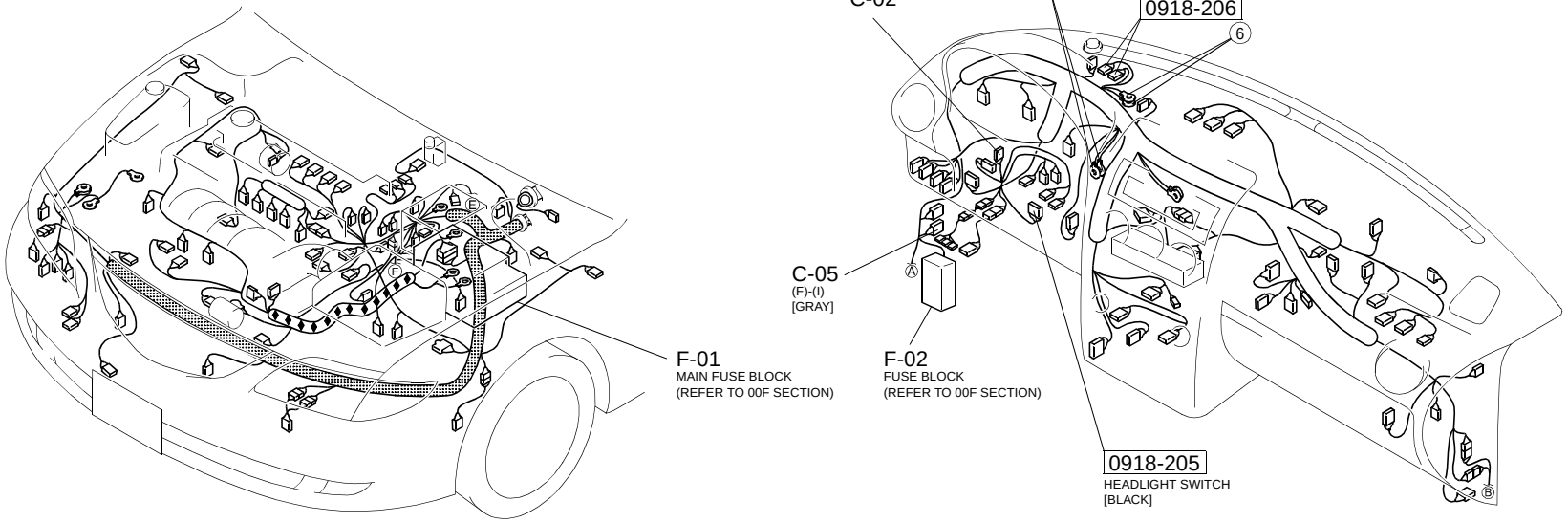

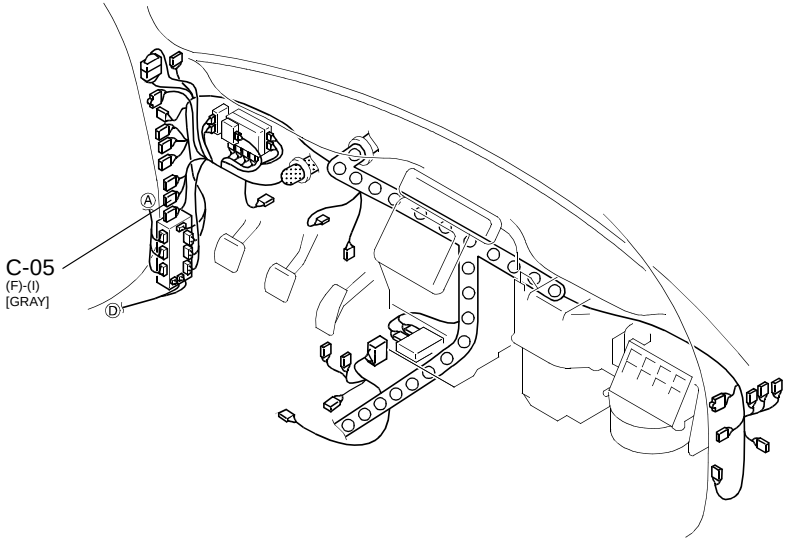

https://www.MyCarManual.com

HEADLIGHT (WITH AUTO LIGHT SYSTEM and/or WITH RUNNING LIGHT SYSTEM:EXCEPT L3 Turbo)

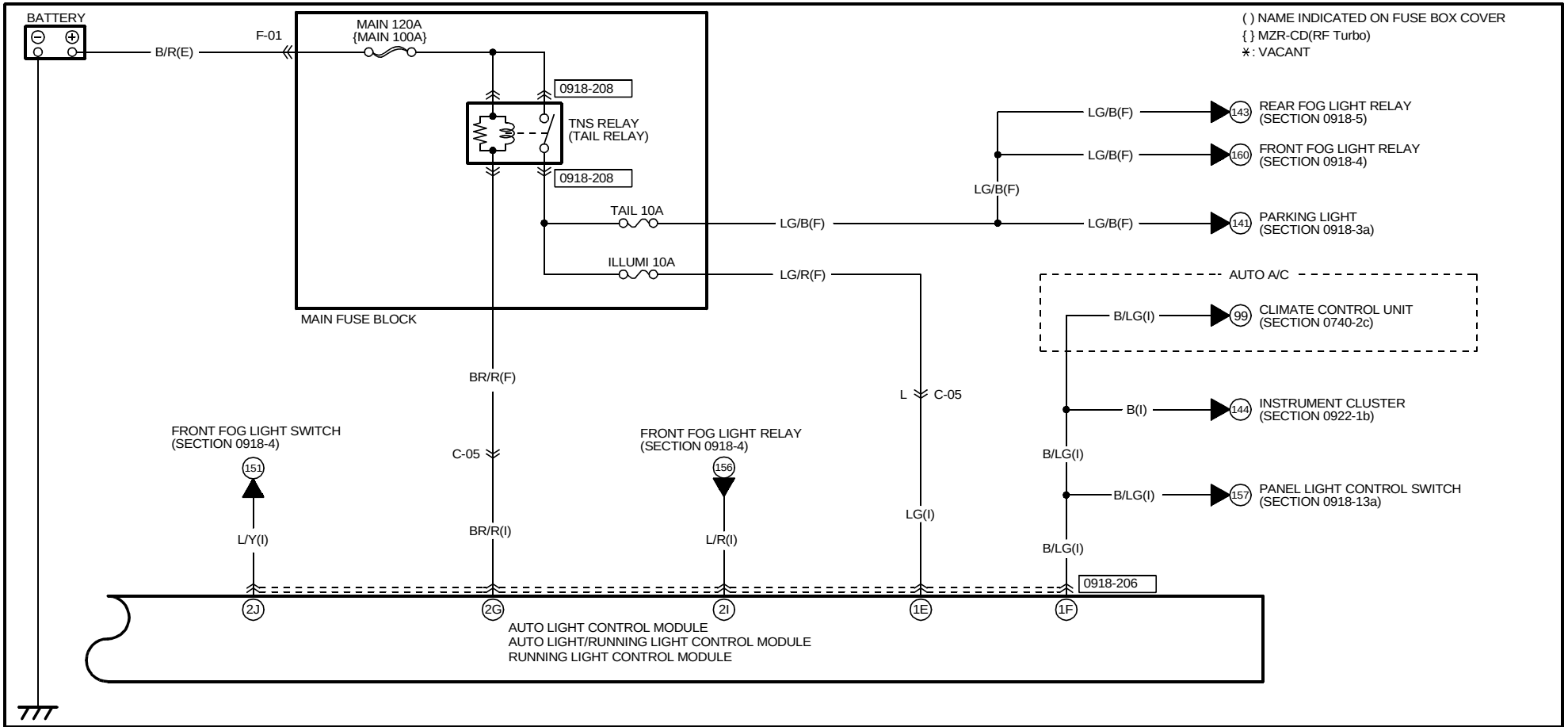

0918-206

AUTO LIGHT CONTROL MODULE
AUTO LIGHT/RUNNING LIGHT CONTROL MODULE
RUNNING LIGHT CONTROL MODULE(I)

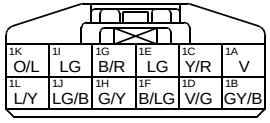

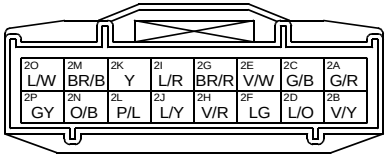

0918-208

TNS RELAY(F)

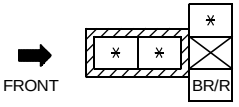

NOTE:SEEN FROM TERMINAL SIDE

https://www.MyCarManual.com

HARNESS SYMBOL : (F) (E) (D) (R)

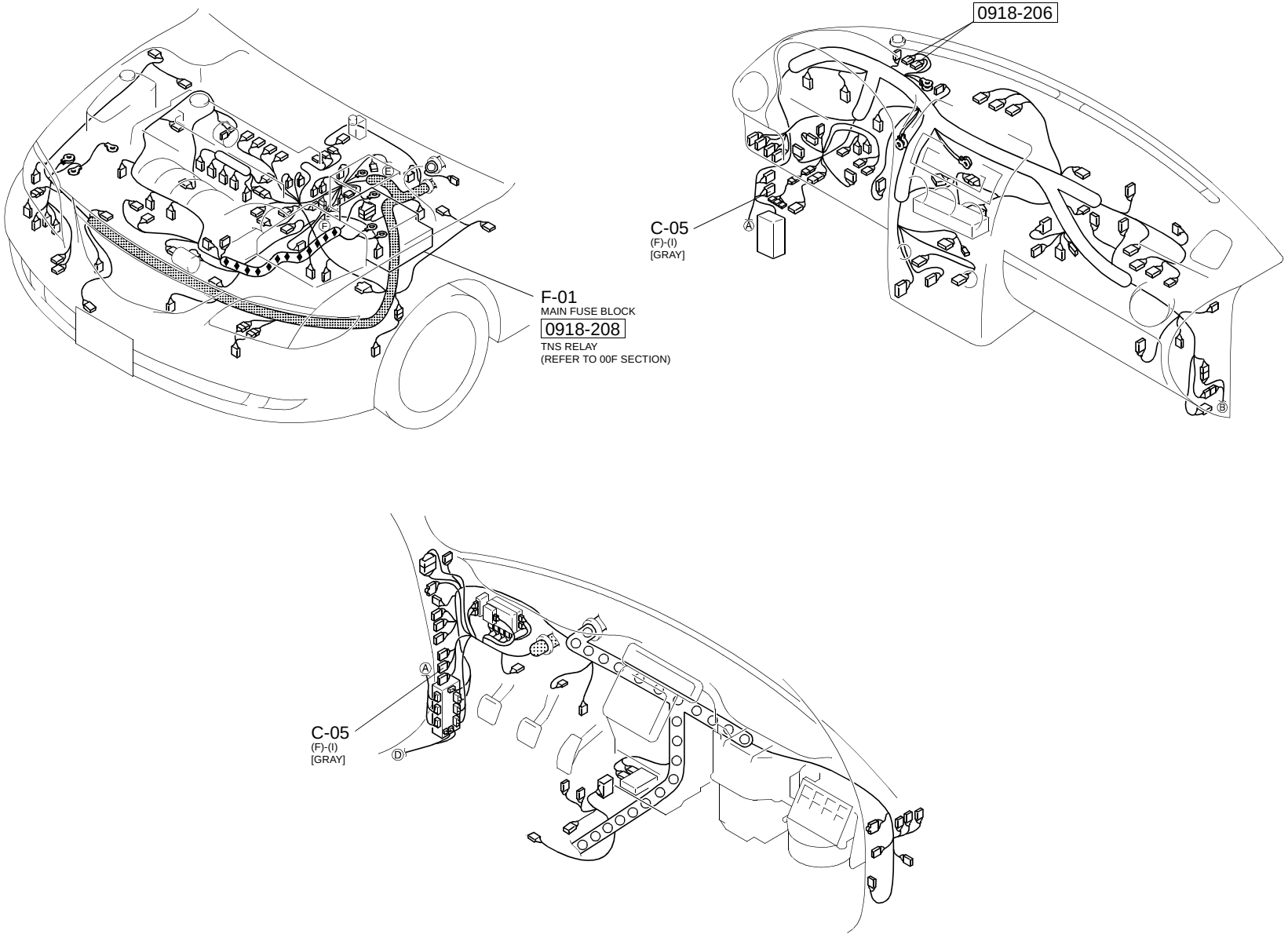

https://www.MyCarManual.com

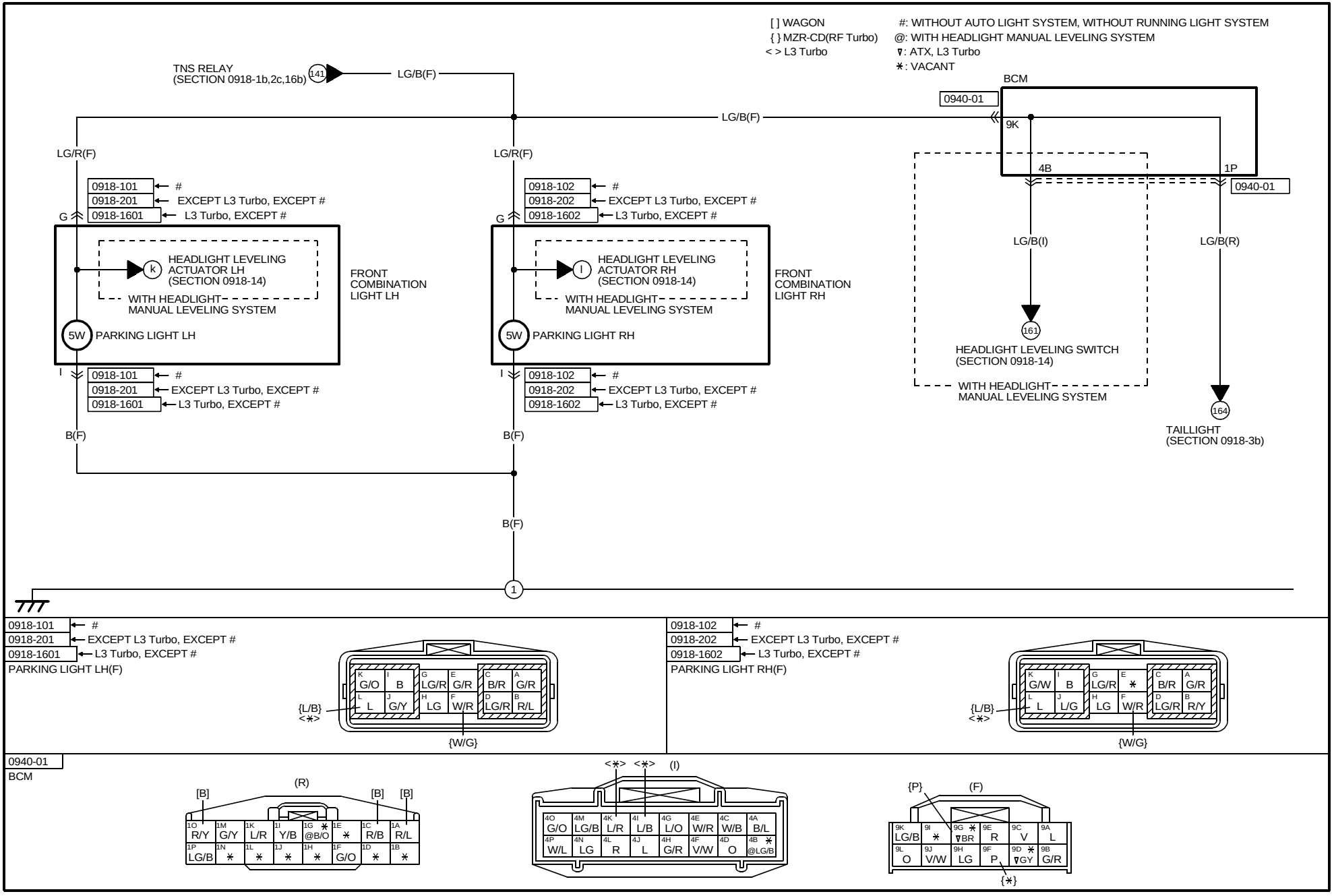

https://www.MyCarManual.com

HARNESS SYMBOL : (F) (E) (D) (R)

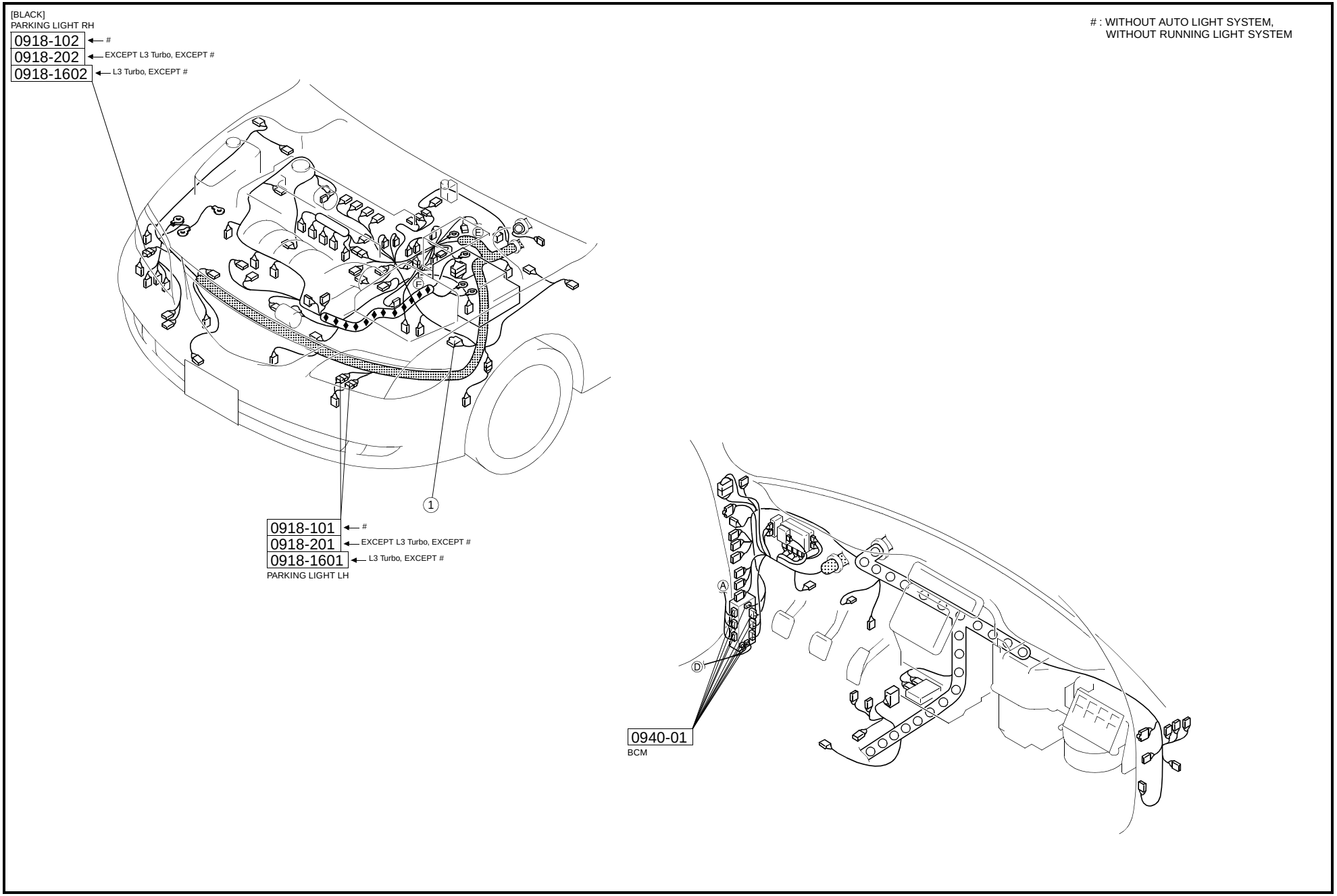

https://www.MyCarManual.com

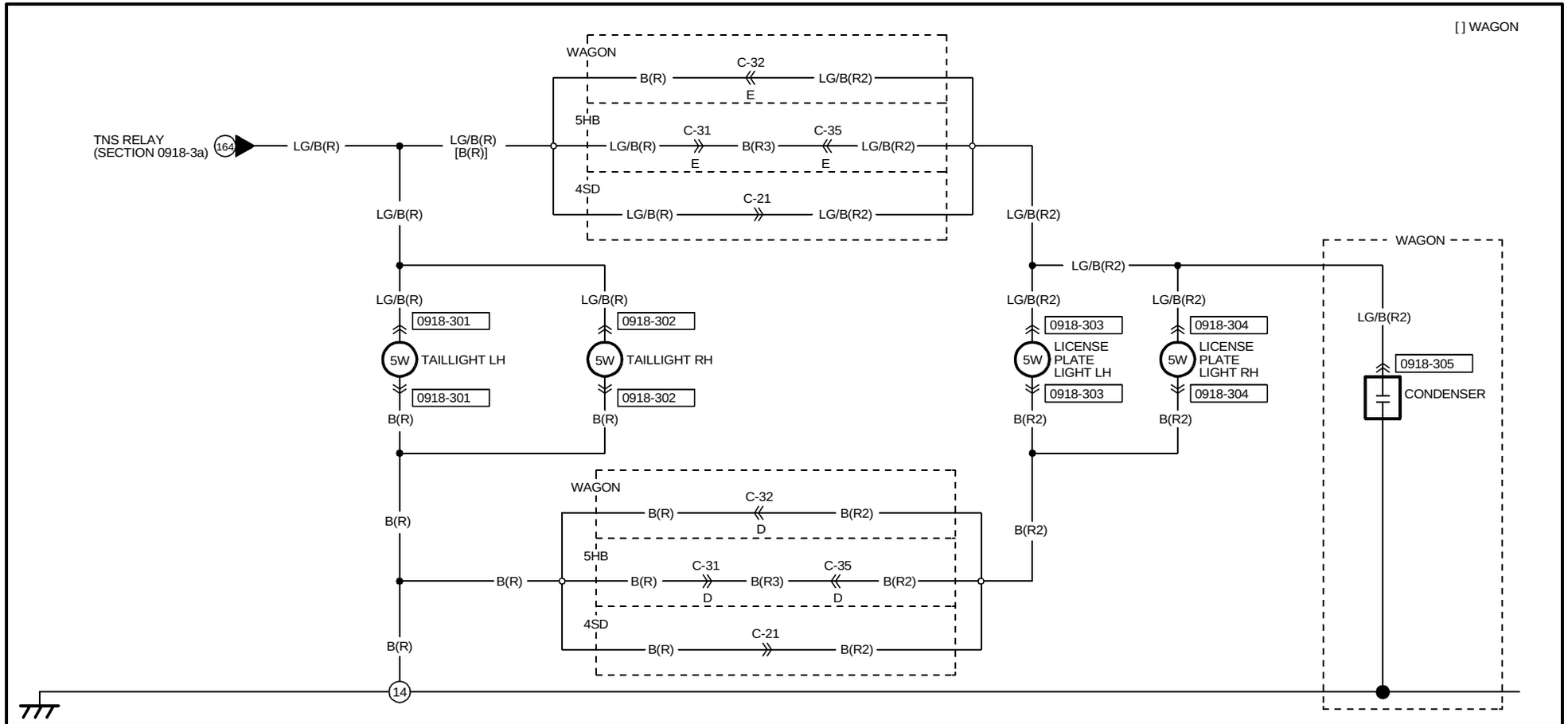

0918-301	0918-302	0918-303	0918-304
TAILLIGHT LH(R)	TAILLIGHT RH(R)	LICENSE PLATE LIGHT LH(R2)	LICENSE PLATE LIGHT RH(R2)
G/Y LG/B B	G/Y LG/B B	B LG/B	B LG/B
0918-305			
CONDENSER(R2)			
LG/B			
(WAGON)			

HARNESS SYMBOL : (F) (E) (D) (R)

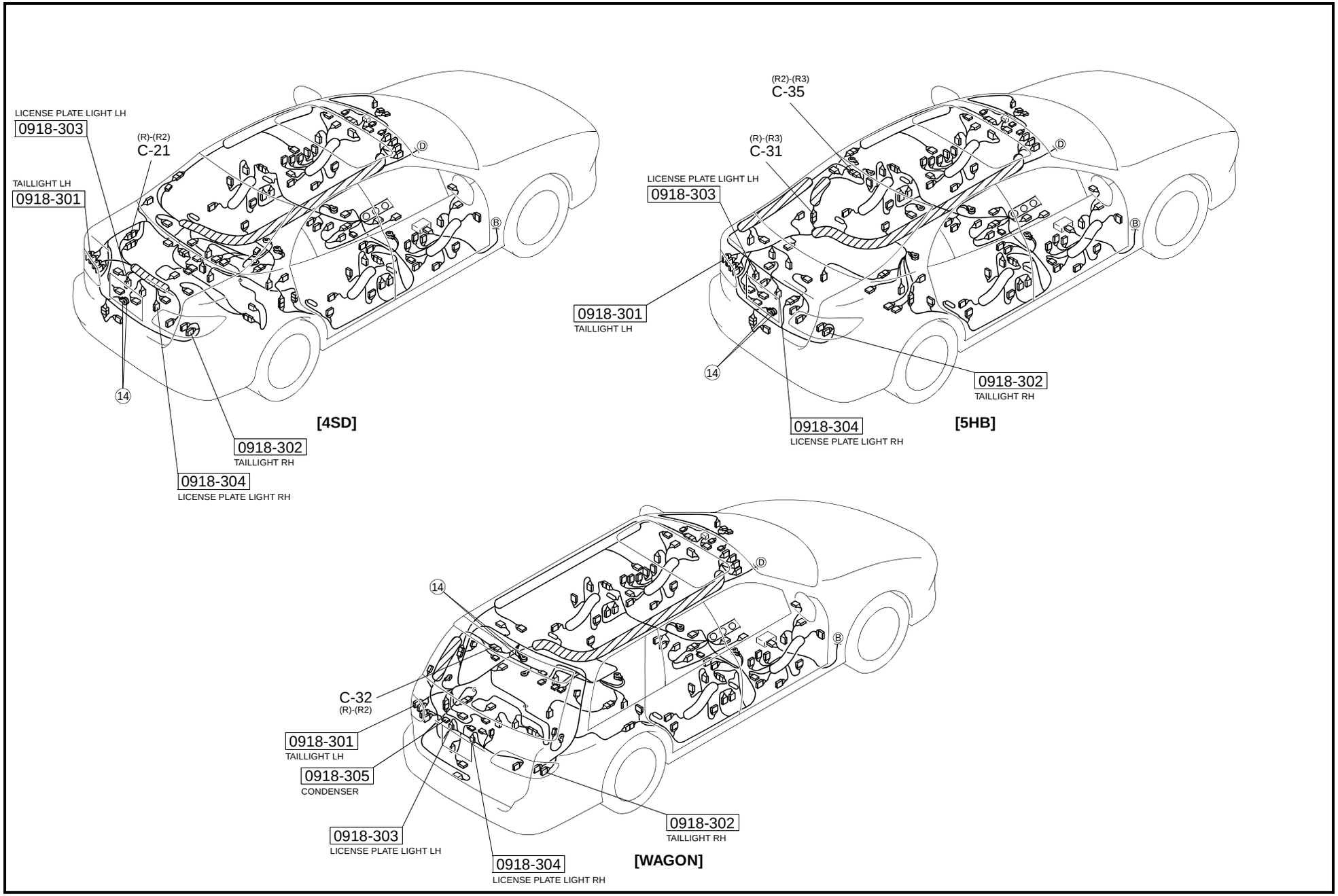

FRONT FOG LIGHT (EXCEPT L3 Turbo)

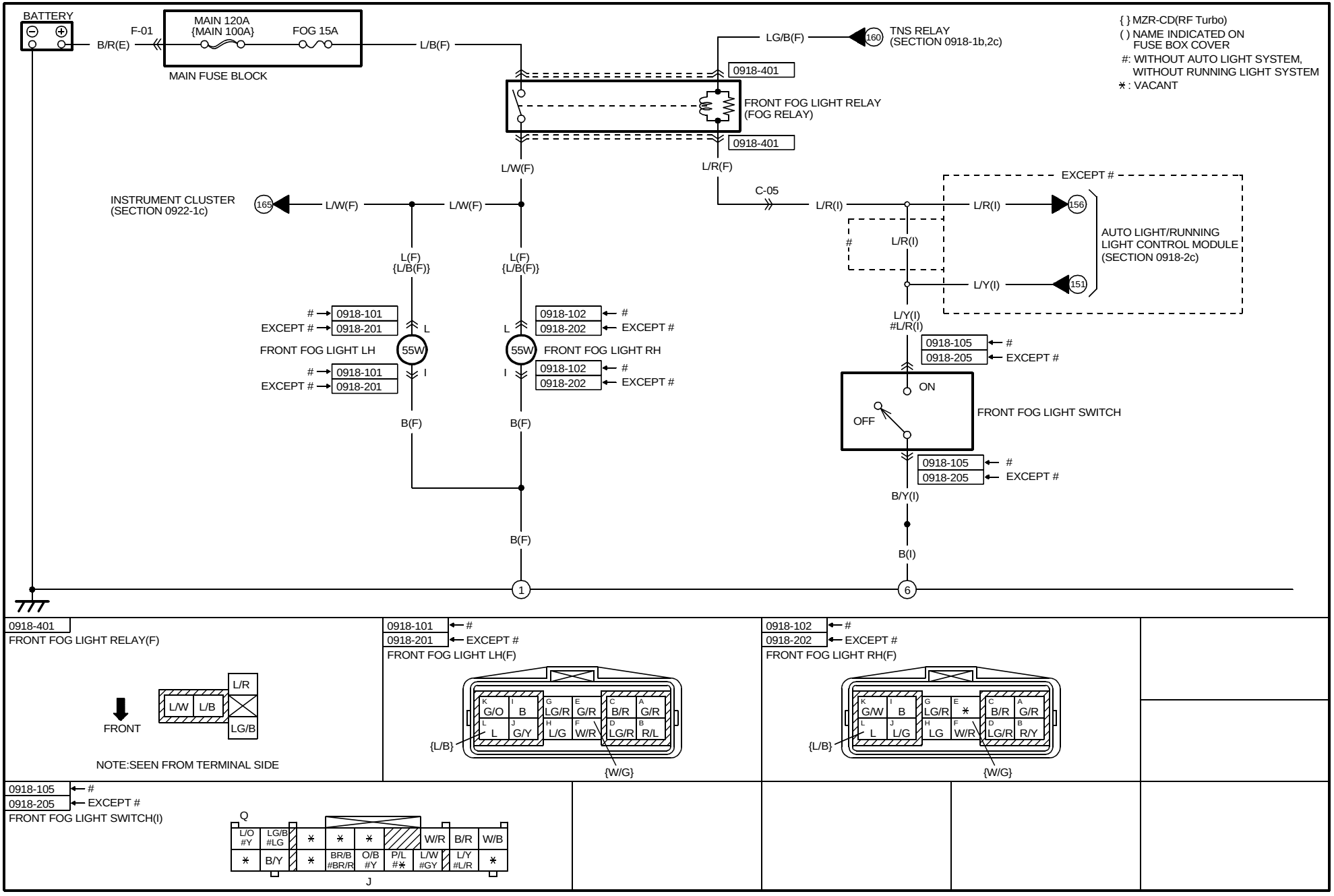

0918-401
FRONT FOG LIGHT RELAY(F)

NOTE:SEEN FROM TERMINAL SIDE

0918-101 ← #
0918-201 ← EXCEPT #
FRONT FOG LIGHT LH(F)

0918-102 ← #
0918-202 ← EXCEPT #
FRONT FOG LIGHT RH(F)

0918-105 ← #
0918-205 ← EXCEPT #
FRONT FOG LIGHT SWITCH(I)

https://www.MyCarManual.com

HARNESS SYMBOL : (F) (E) (D) (R)

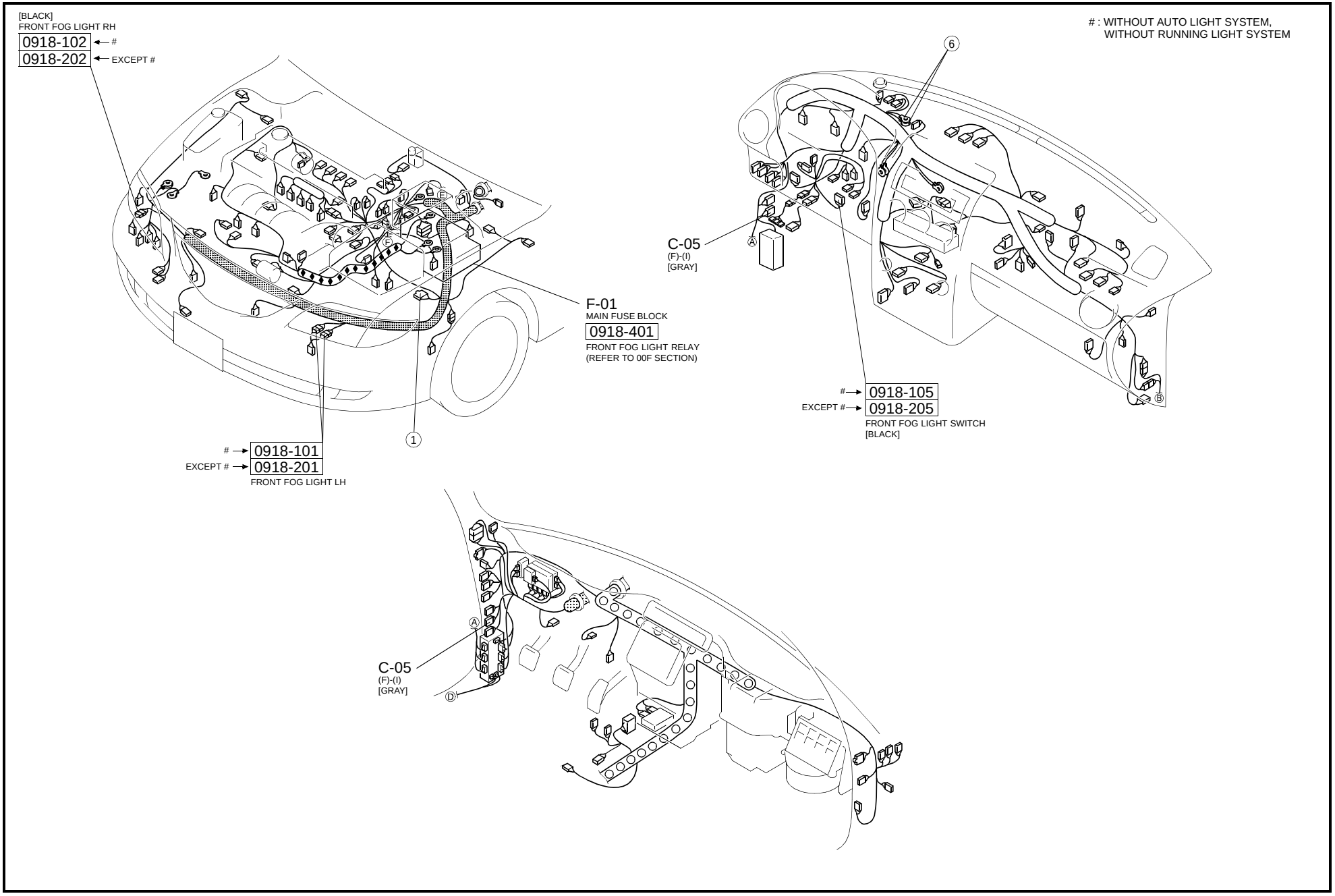

https://www.MyCarManual.com

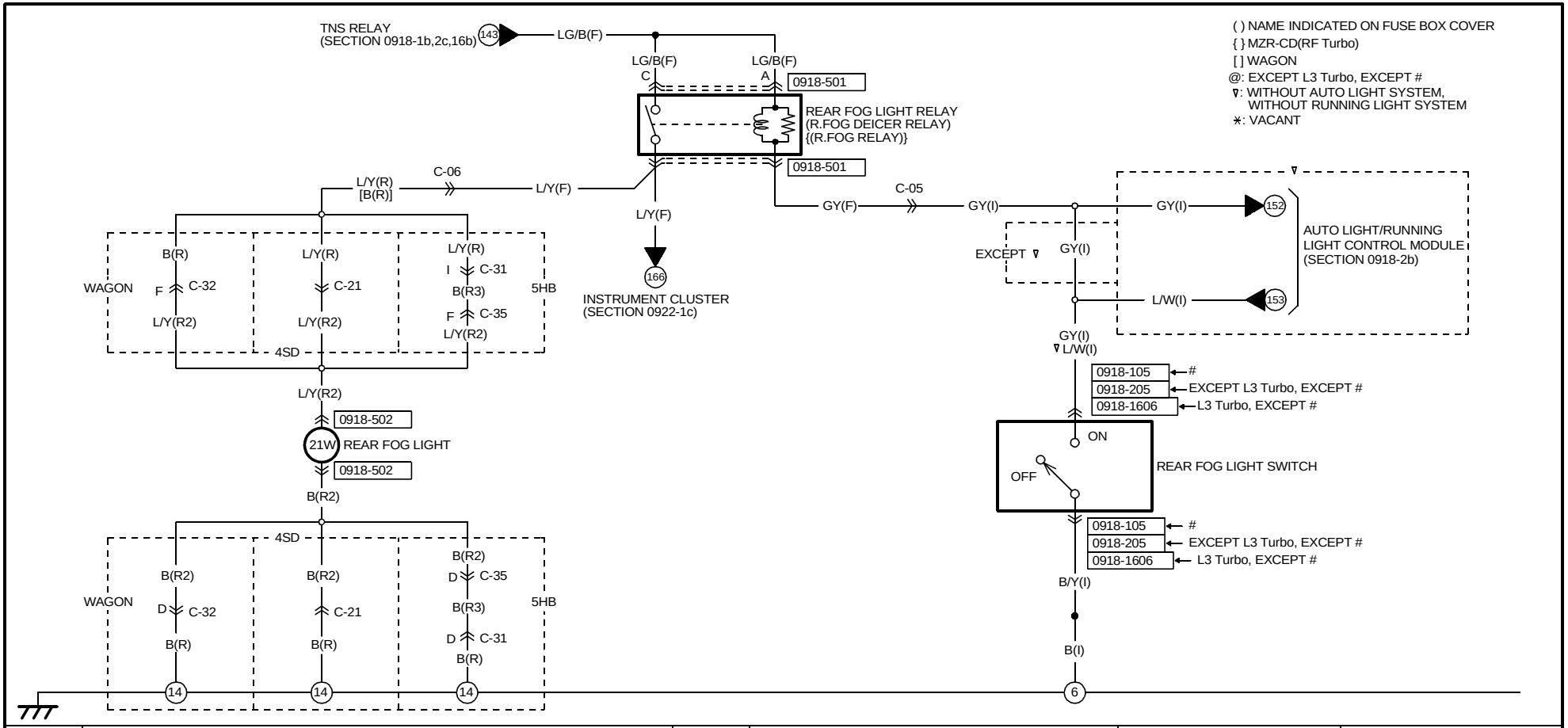

0918-501

REAR FOG LIGHT RELAY(F)

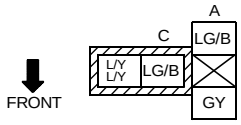

NOTE:SEEN FROM TERMINAL SIDE

0918-502

REAR FOG LIGHT(R2)

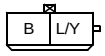

0918-105 ← #
0918-205 ← EXCEPT L3 Turbo, EXCEPT #
0918-1606 ← L3 Turbo, EXCEPT #

REAR FOG LIGHT SWITCH(I)

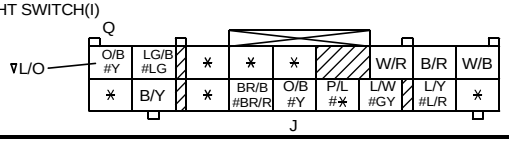

https://www.MyCarManual.com

HARNESS SYMBOL : (F) (E) (D) (R)

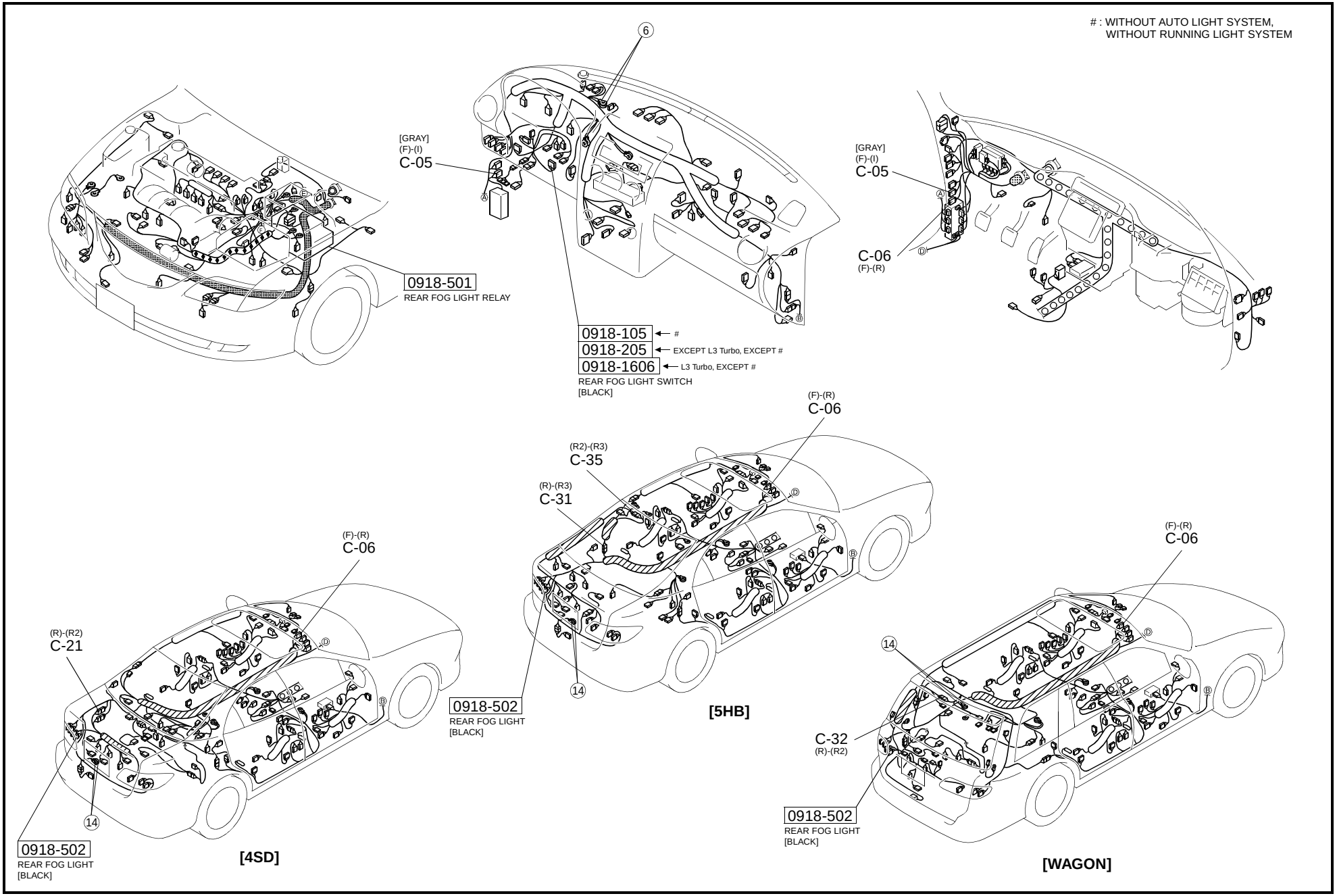

https://www.MyCarManual.com

TURN AND HAZARD WARNING LIGHT

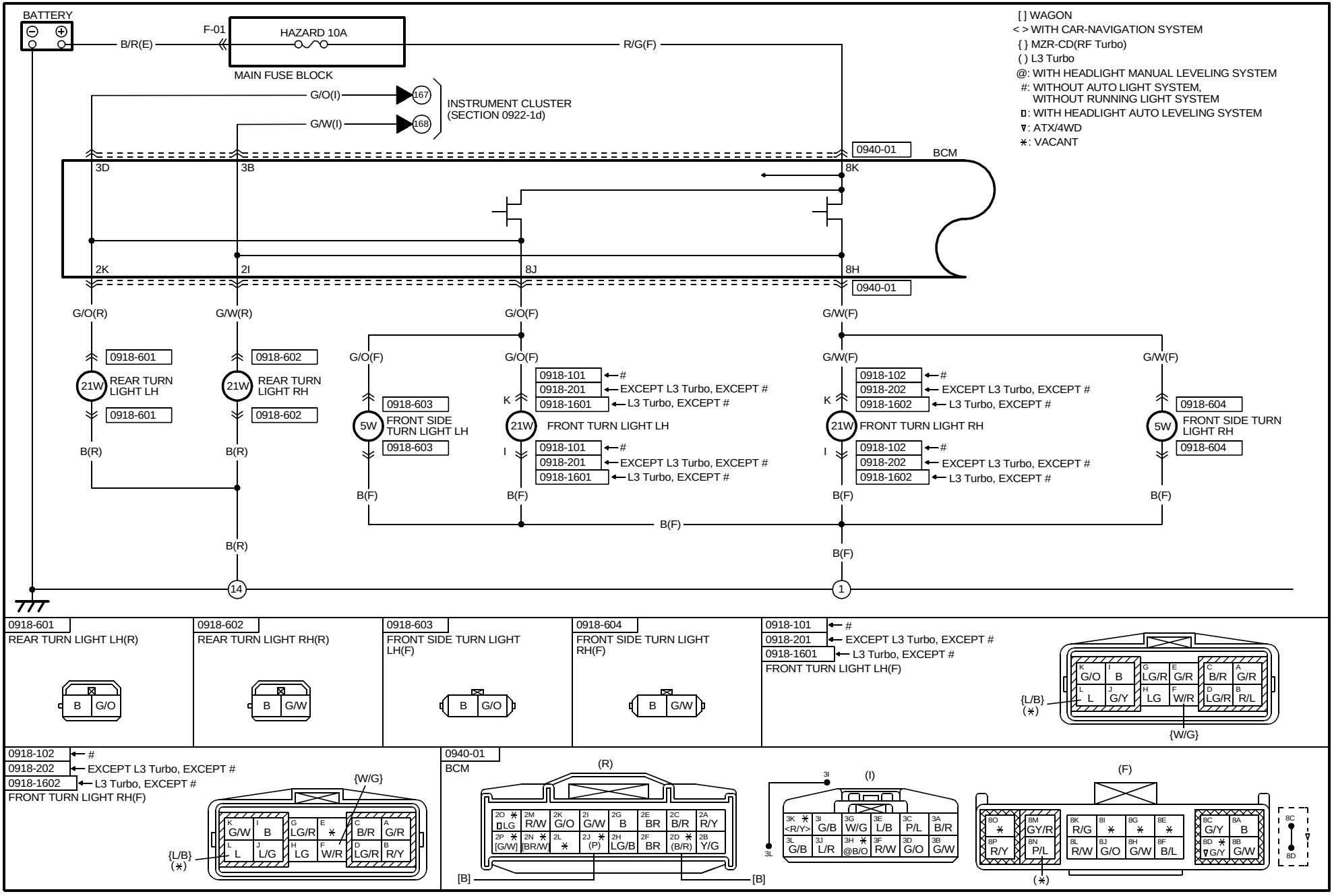

https://www.MyCarManual.com

HARNESS SYMBOL : (F) (E) (D) (R)

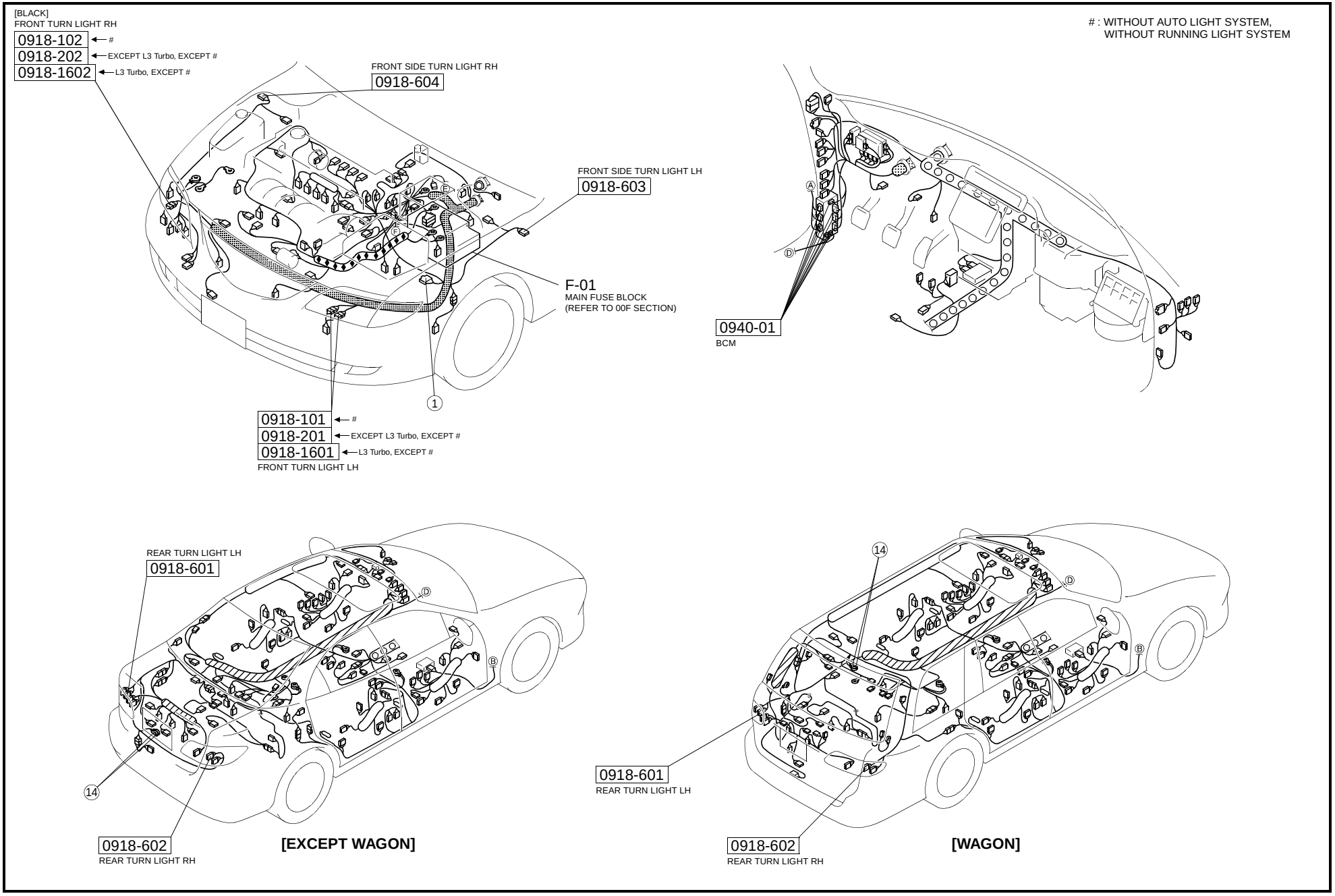

https://www.MyCarManual.com

< > AUTO A/C
@: WITH HEADLIGHT MANUAL LEVELING SYSTEM
#: WITHOUT AUTO LIGHT SYSTEM, WITHOUT RUNNING LIGHT SYSTEM
&: L3 Turbo
∇: EXCEPT L3 Turbo, EXCEPT #
✳: VACANT

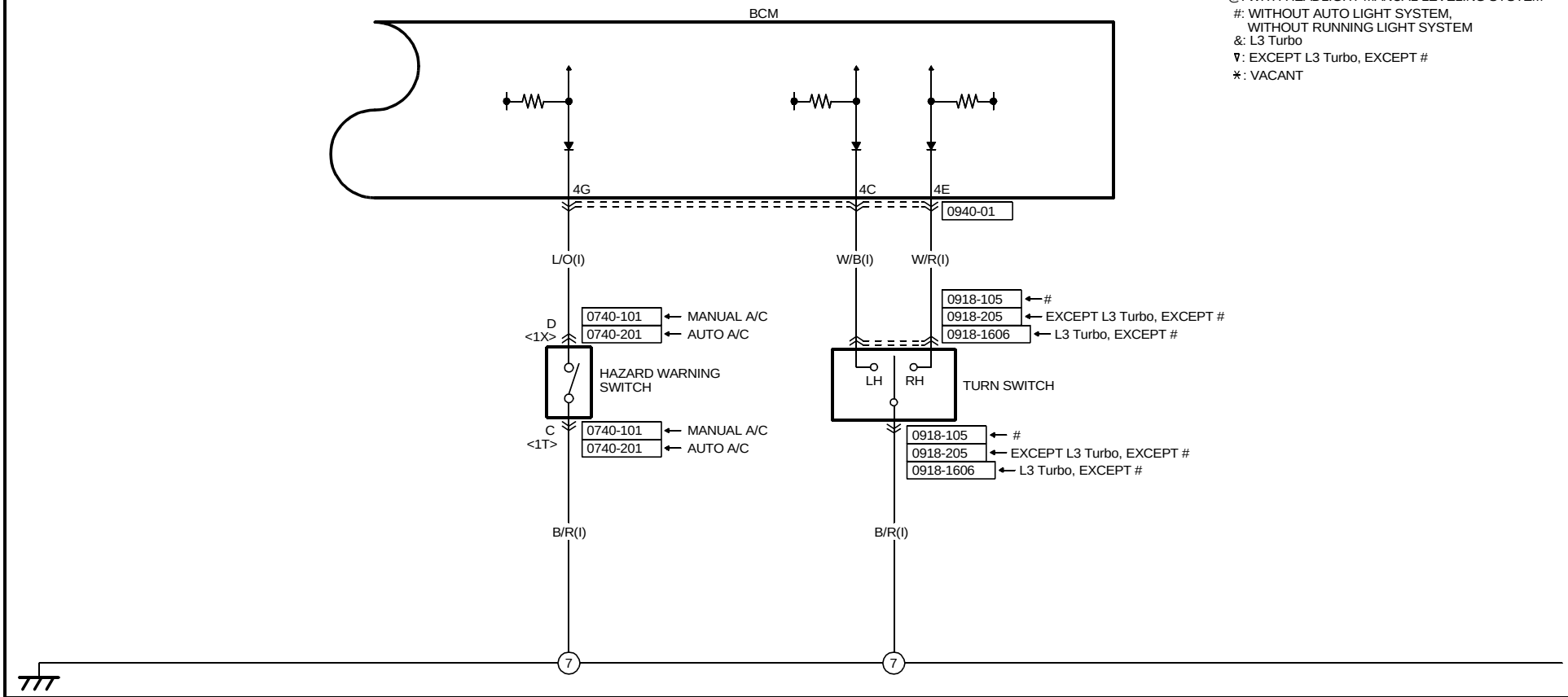

0740-101
HAZARD WARNING SWITCH(I)

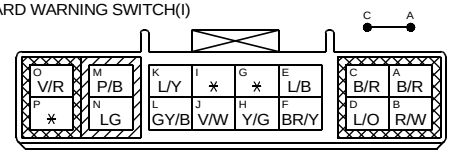

(MANUAL A/C)

0740-201
HAZARD WARNING SWITCH(I)

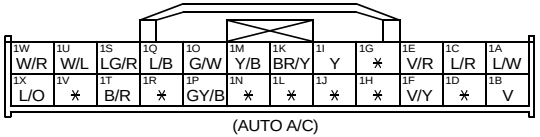

(AUTO A/C)

0918-105 ← #
0918-205 ← EXCEPT L3 Turbo, EXCEPT #
0918-1606 ← L3 Turbo, EXCEPT #
TURN SWITCH(I)

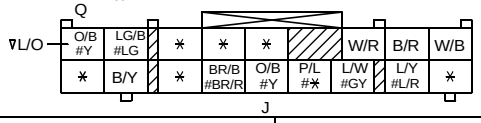

0940-01
BCM

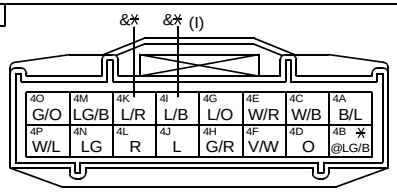

https://www.MyCarManual.com

HARNESS SYMBOL : (F) (E) (D) (R)

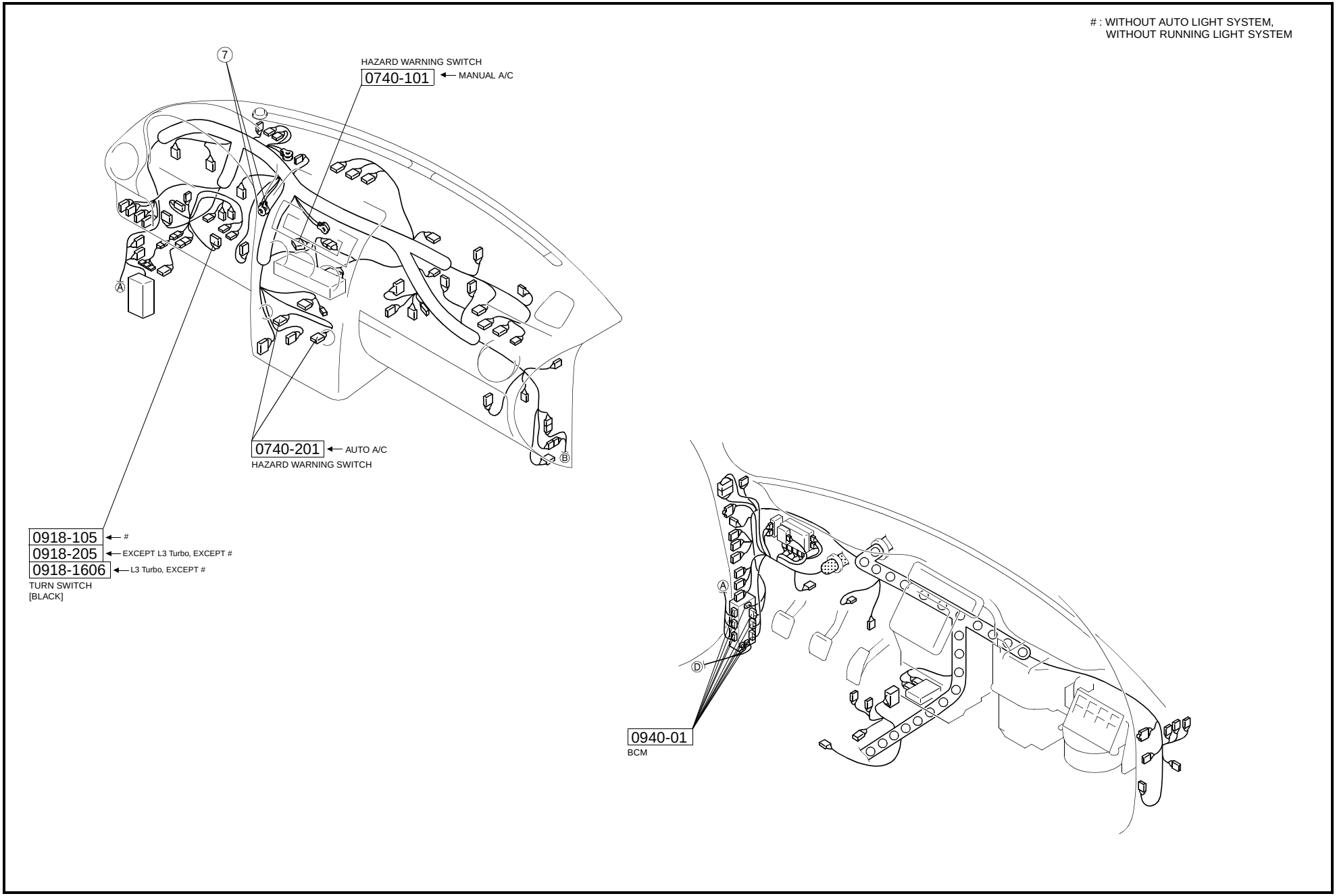

https://www.MyCarManual.com

< > WITH CAR-NAVIGATION SYSTEM
[ ] WAGON
@: WITH HEADLIGHT MANUAL LEVELING SYSTEM
&: L3 Turbo
∇: ATX/4WD
✳: VACANT

BCM 0940-01 — 1O, 8P, 3K
R/Y(R) [B(R)]
R/Y(I) → 169 CAR-NAVIGATION UNIT (SECTION 0920-5a) — WITH CAR-NAVIGATION SYSTEM
R/Y(F)
5HB: B(R) — K C-32 — R/Y(R)
WAGON: R/Y(R) — M C-31 — B(R3) — K C-35 — R/Y(R2)
4SD: R/Y(R) — C-21 — R/Y(R2)
R/Y(R2)
R/Y(R2) — 0918-701 — 18.4W BACK-UP LIGHT LH — 0918-701 — B(R2)
R/Y(R2) — 0918-702 — 18.4W BACK-UP LIGHT RH — 0918-702 — B(R2)
B(R2)
5HB: B(R2) — D C-32 — B(R)
WAGON: B(R2) — D C-35 — B(R3) — D C-31 — B(R)
4SD: B(R2) — C-21 — B(R)
14 — WAGON — 5HB — 4SD

MTX
WITH DSC
R/Y(F) → 92 DSC HU/CM (SECTION 0415-b)
MZR-CD(RF Turbo)
R/Y(F) — C-08 X — R/Y(E) — 0918-703 — BACK-UP LIGHT SWITCH — 0918-703 — G/B(E) — C-08 — G/B(F)
EXCEPT MZR-CD(RF Turbo)
R/Y(F) — 0918-703 — BACK-UP LIGHT SWITCH — 0918-703 — G/B(F)
G/B(F) → 93 BCM (SECTION 0940-d)
R/Y(F) → 94 TRANSAXLE RANGE SWITCH (SECTION 0517-1c,2a)
ATX

0918-701
BACK-UP LIGHT LH(R2)

0918-702
BACK-UP LIGHT RH(R2)

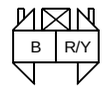

0918-703
BACK-UP LIGHT SWITCH
(E) ← MZR-CD(RF Turbo)
(F) ← EXCEPT MZR-CD(RF Turbo)

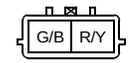

(MTX)

0940-01
BCM

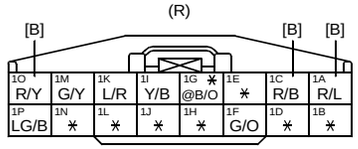

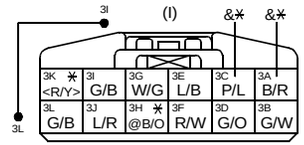

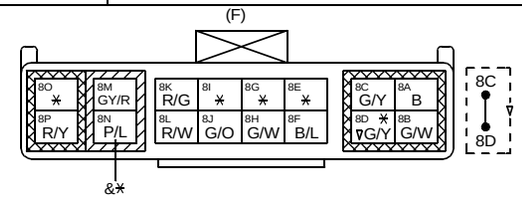

HARNESS SYMBOL : (F) (E) (D) (R)

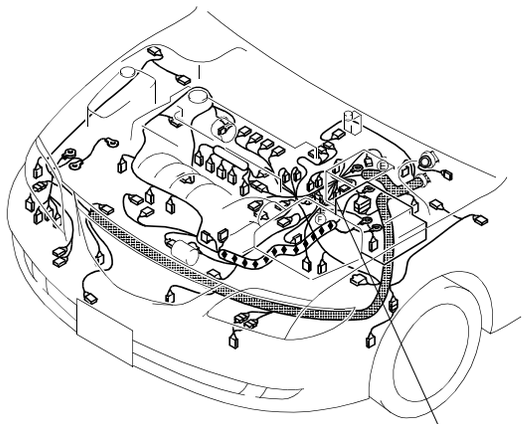

[EXCEPT MZR-CD (RF Turbo)]

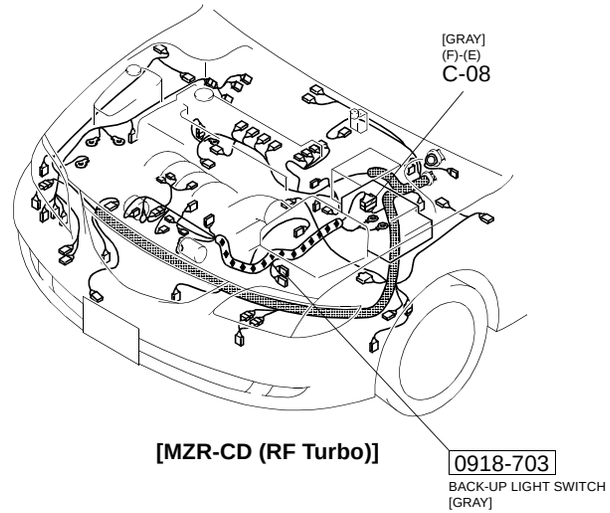

[MZR-CD (RF Turbo)]

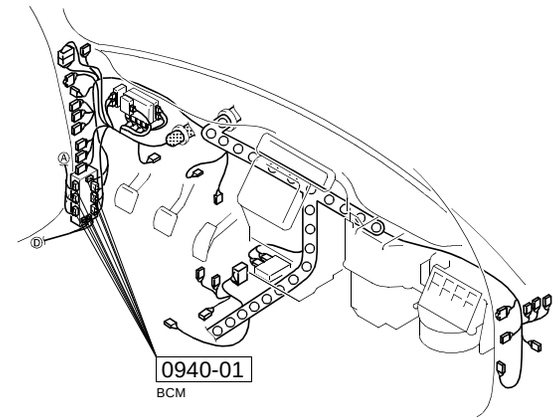

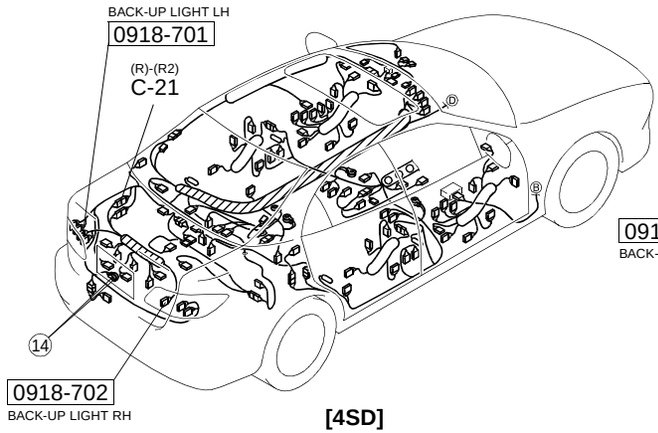

[4SD]

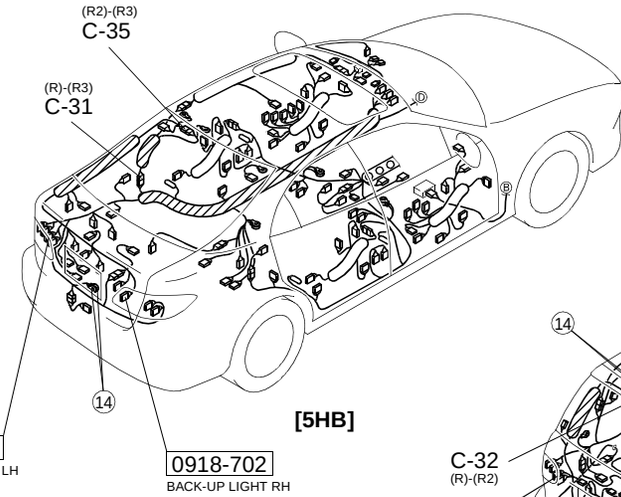

[5HB]

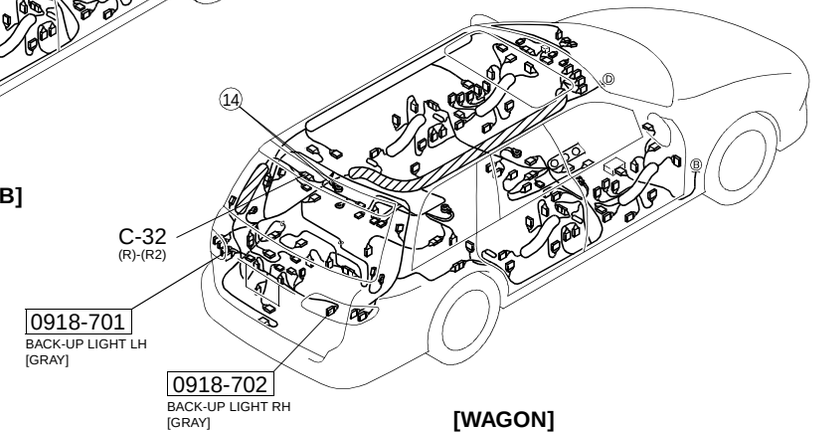

[WAGON]

BRAKE LIGHT/HIGH-MOUNT BRAKE LIGHT

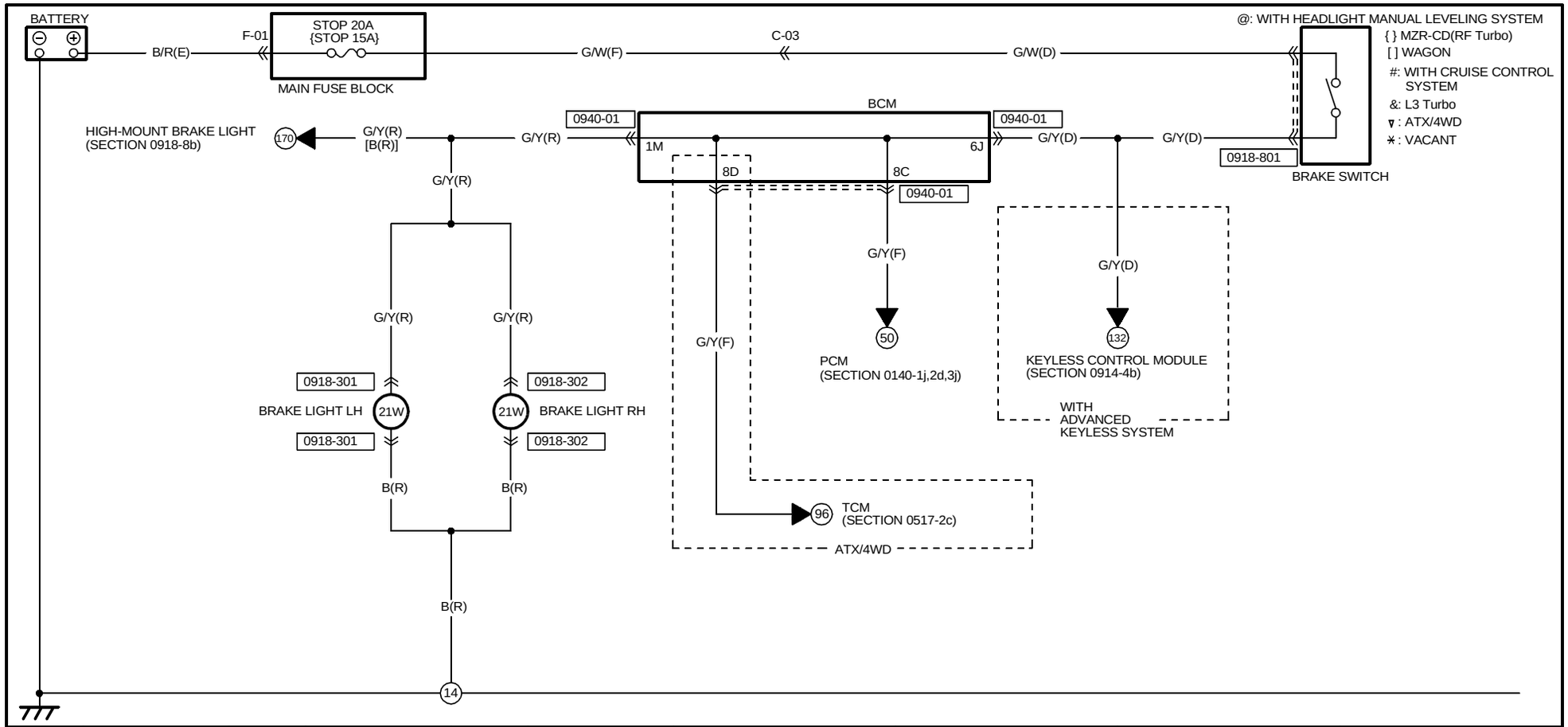

0918-801	0918-301	0918-302				
BRAKE SWITCH(D)	BRAKE LIGHT LH(R)	BRAKE LIGHT RH(R)				

0940-01
BCM

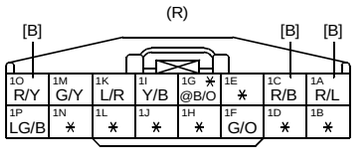

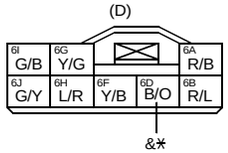

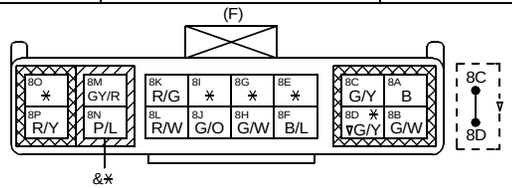

HARNESS SYMBOL : (F) (E) (D) (R)

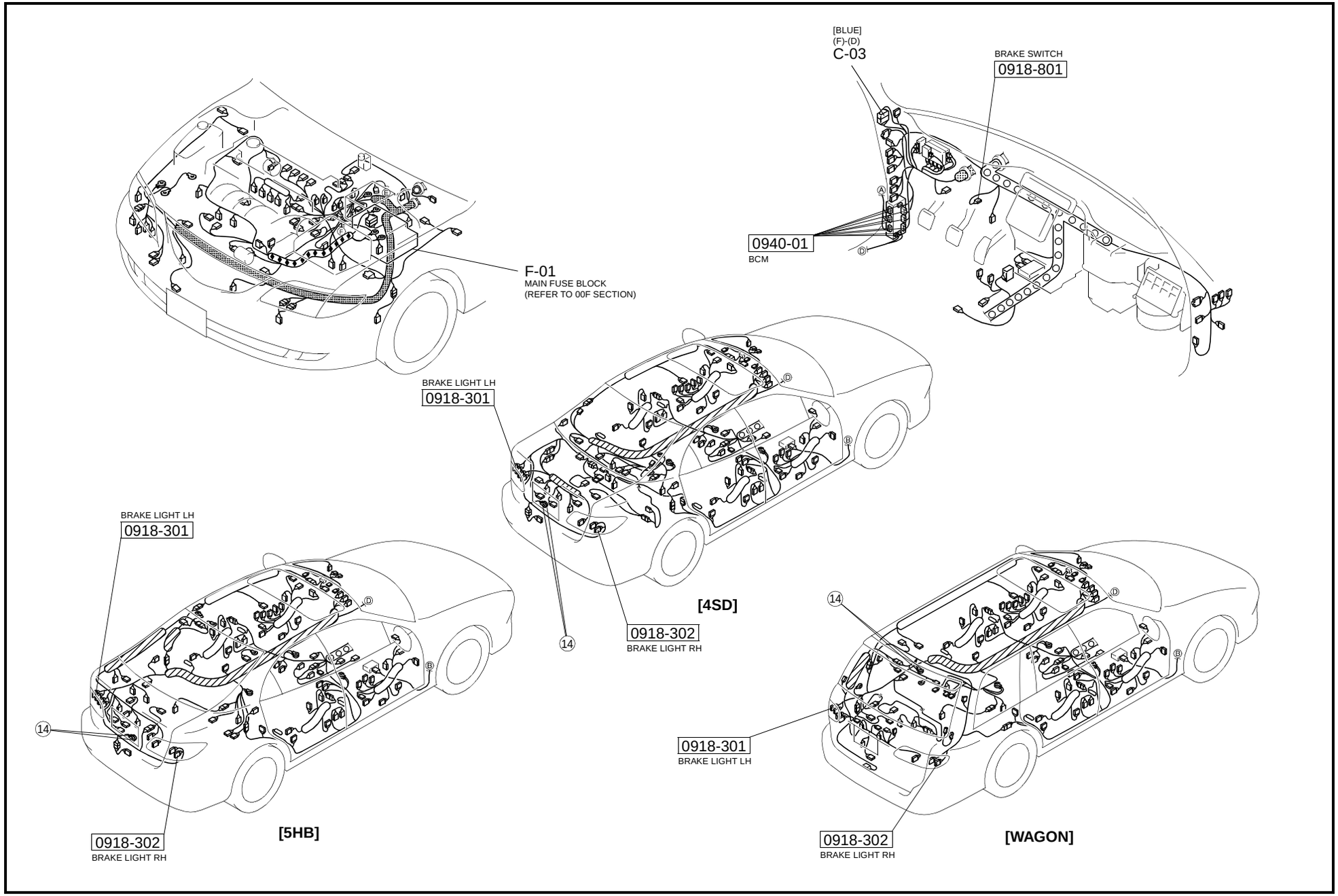

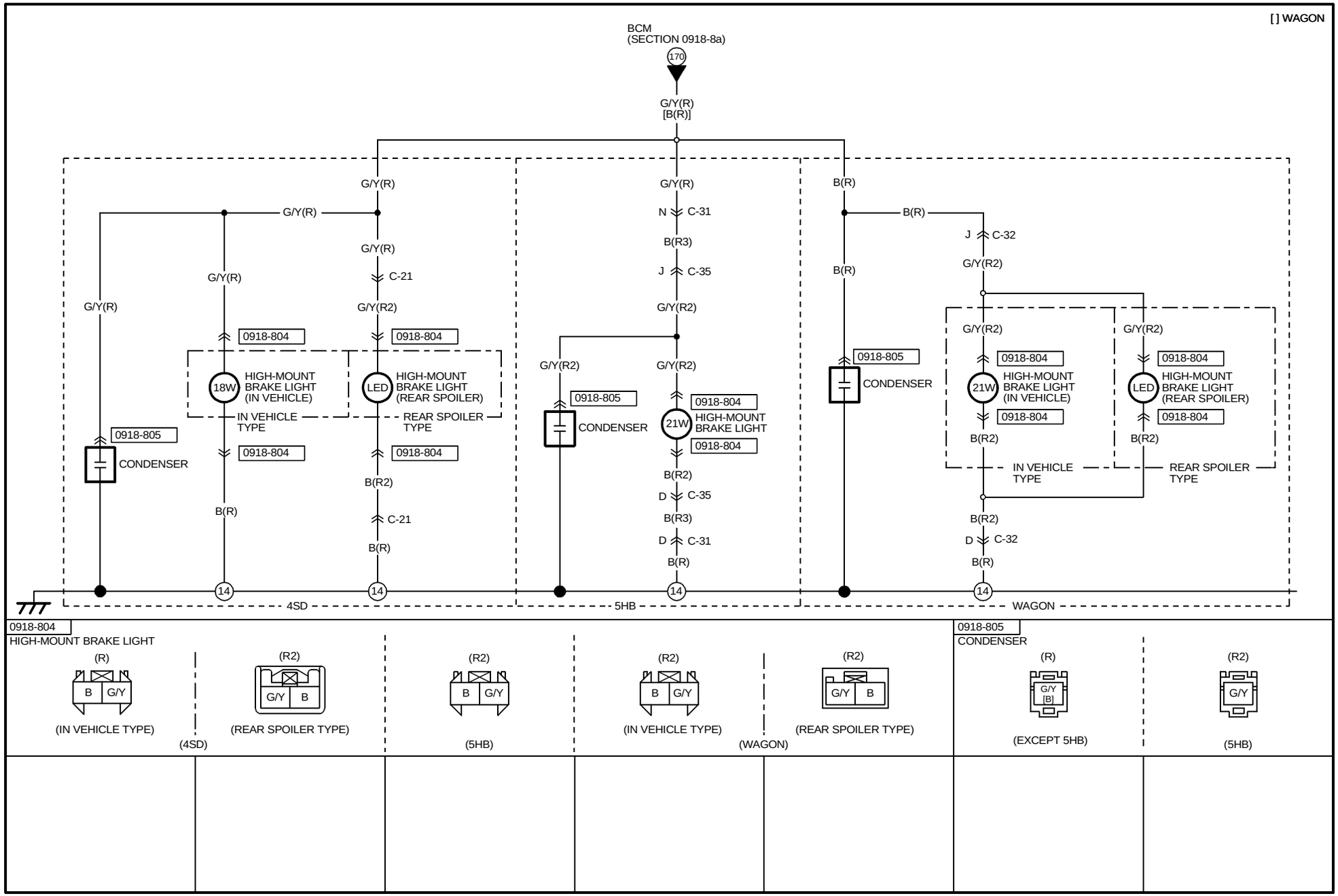
[ ] WAGON
BCM
(SECTION 0918-8a)
170
G/Y(R)
[B(R)]
G/Y(R)
N C-31
B(R3)
J C-35
G/Y(R2)
B(R)
J C-32
G/Y(R2)
C-21
0918-804
18W
HIGH-MOUNT
BRAKE LIGHT
(IN VEHICLE)
LED
HIGH-MOUNT
BRAKE LIGHT
(REAR SPOILER)
IN VEHICLE
TYPE
REAR SPOILER
TYPE
0918-805
CONDENSER
21W
HIGH-MOUNT
BRAKE LIGHT
B(R2)
D C-35
D C-31
D C-32
B(R)
14
4SD
5HB
WAGON
0918-804
HIGH-MOUNT BRAKE LIGHT
(R)
B
G/Y
(IN VEHICLE TYPE)
(R2)
(REAR SPOILER TYPE)
(4SD)
(5HB)
(WAGON)
0918-805
CONDENSER
G/Y
[B]
(EXCEPT 5HB)

HARNESS SYMBOL : (F) (E) (D) (R)

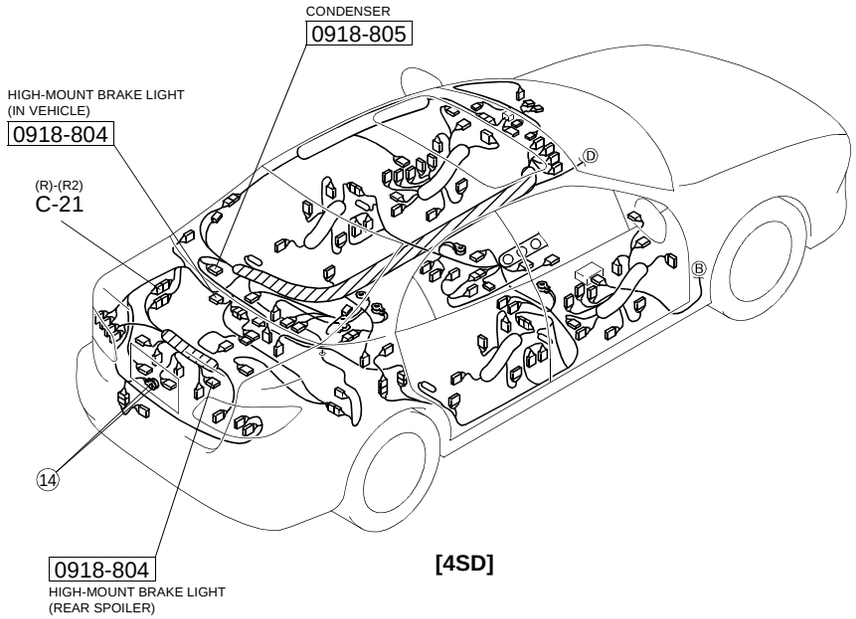

[4SD]

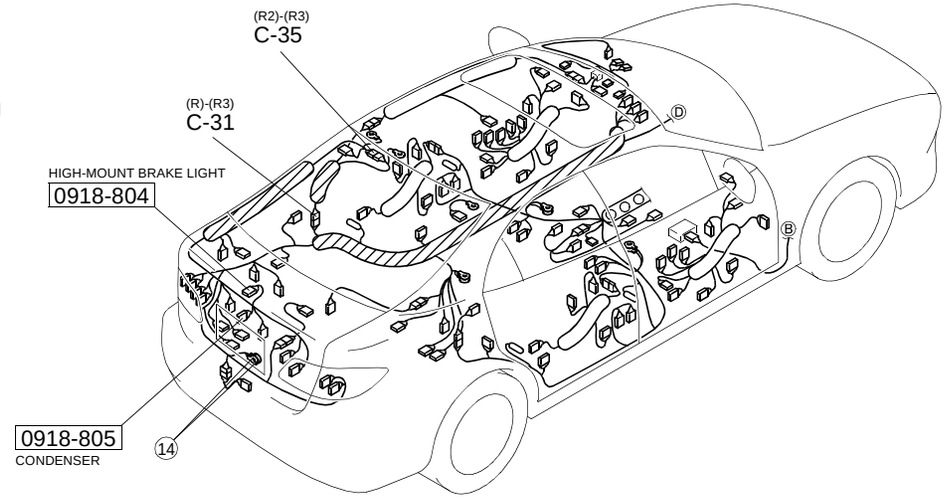

[5HB]

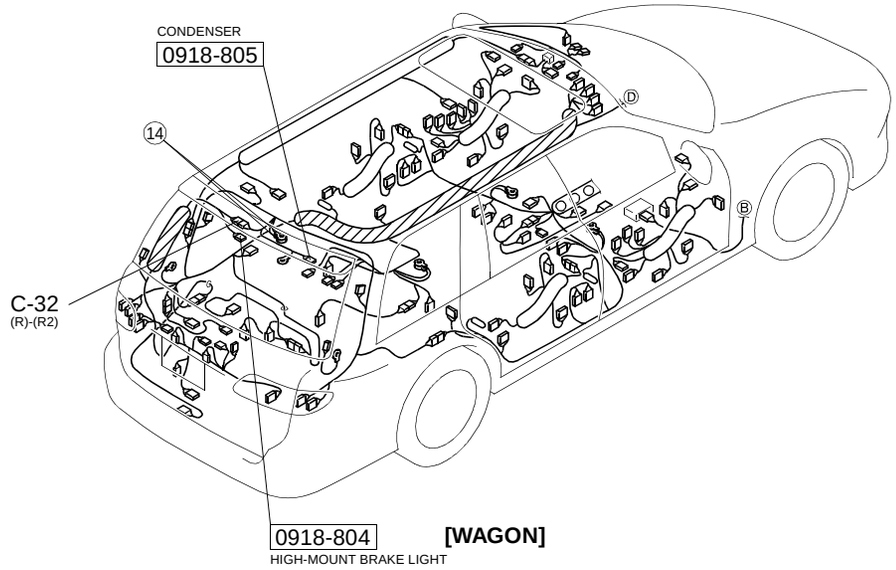

[WAGON]

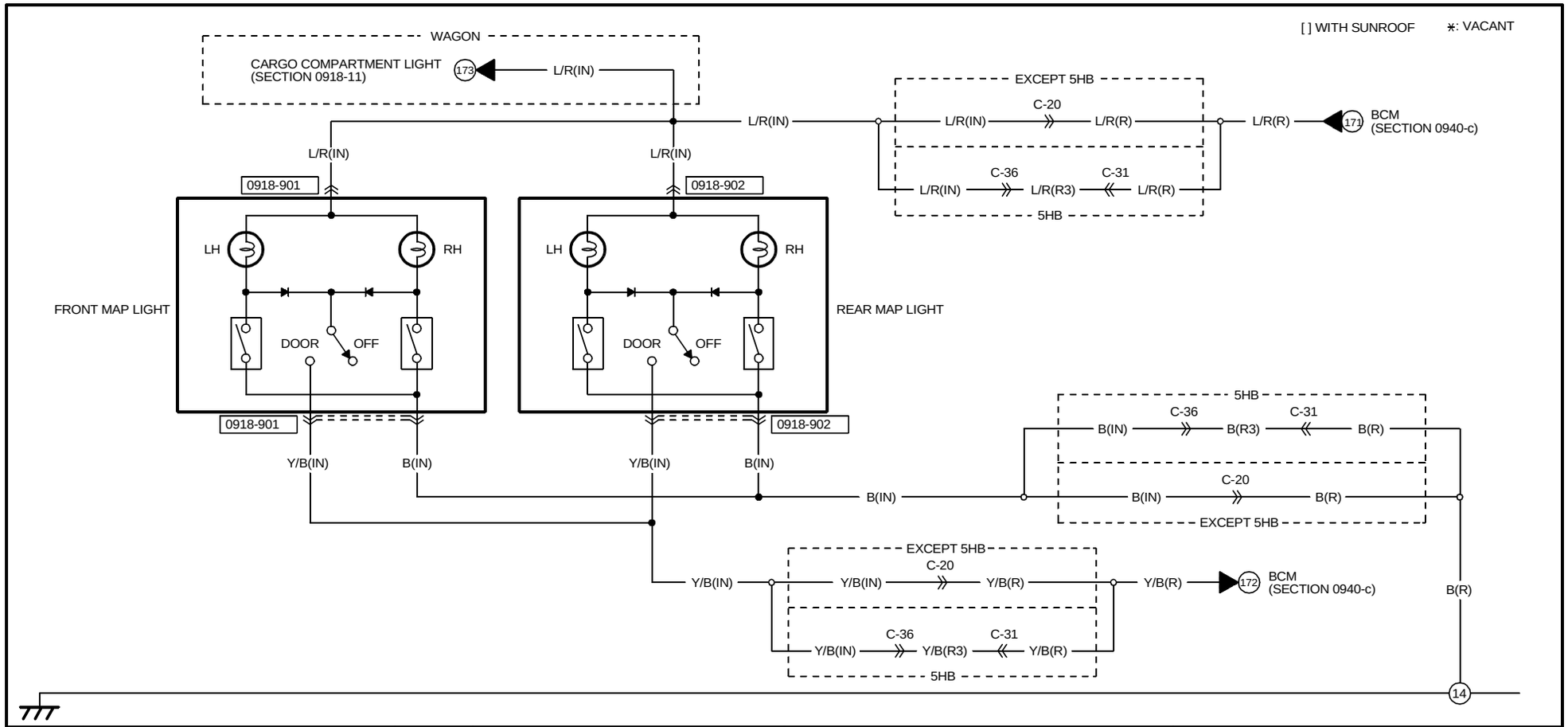

0918-901	0918-902		
FRONT MAP LIGHT(IN)	REAR MAP LIGHT(IN)		
* [R/W] Y/B L/R B	* Y/B L/R B		

HARNESS SYMBOL : (F) (E) (D) (R)

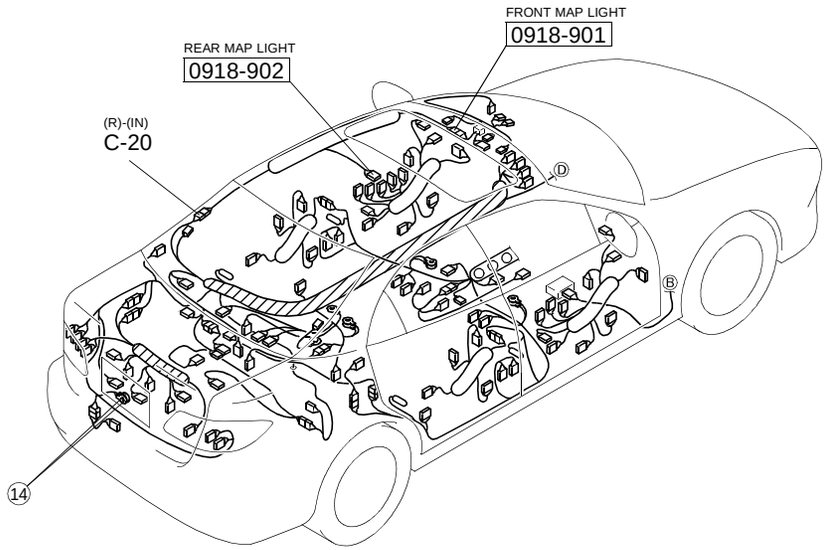

[4SD]

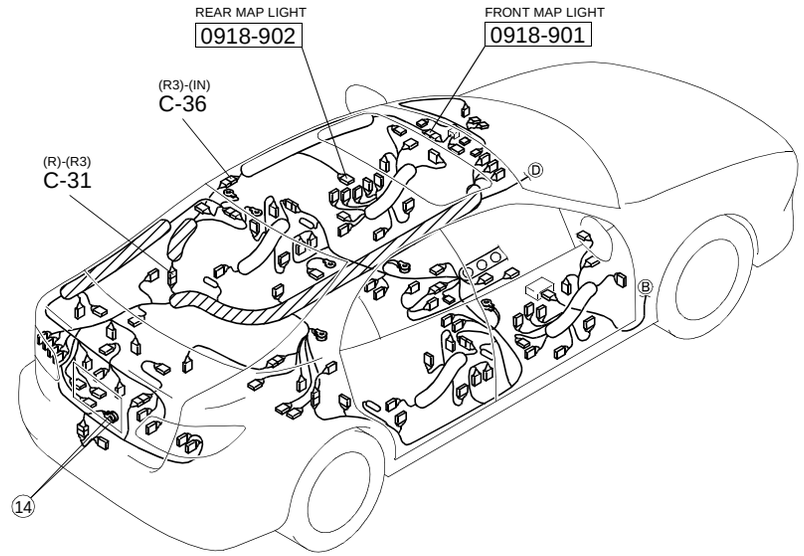

[5HB]

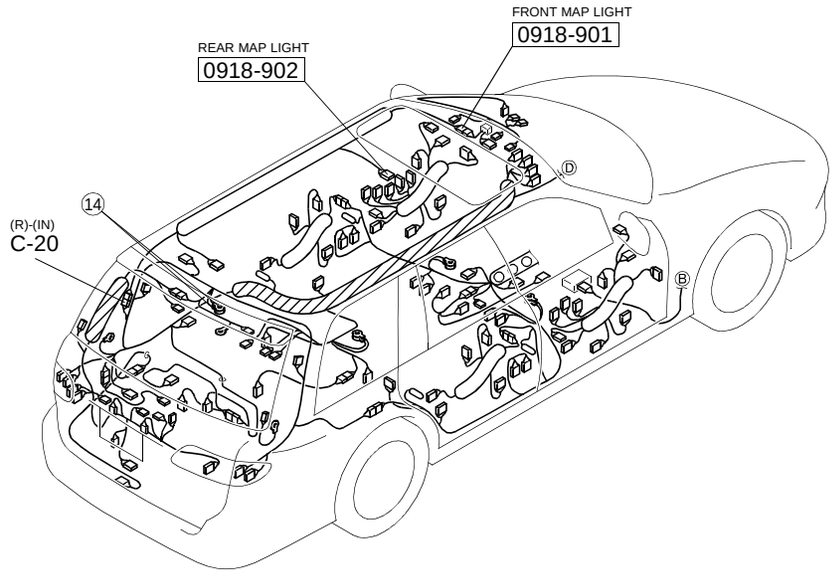

[WAGON]

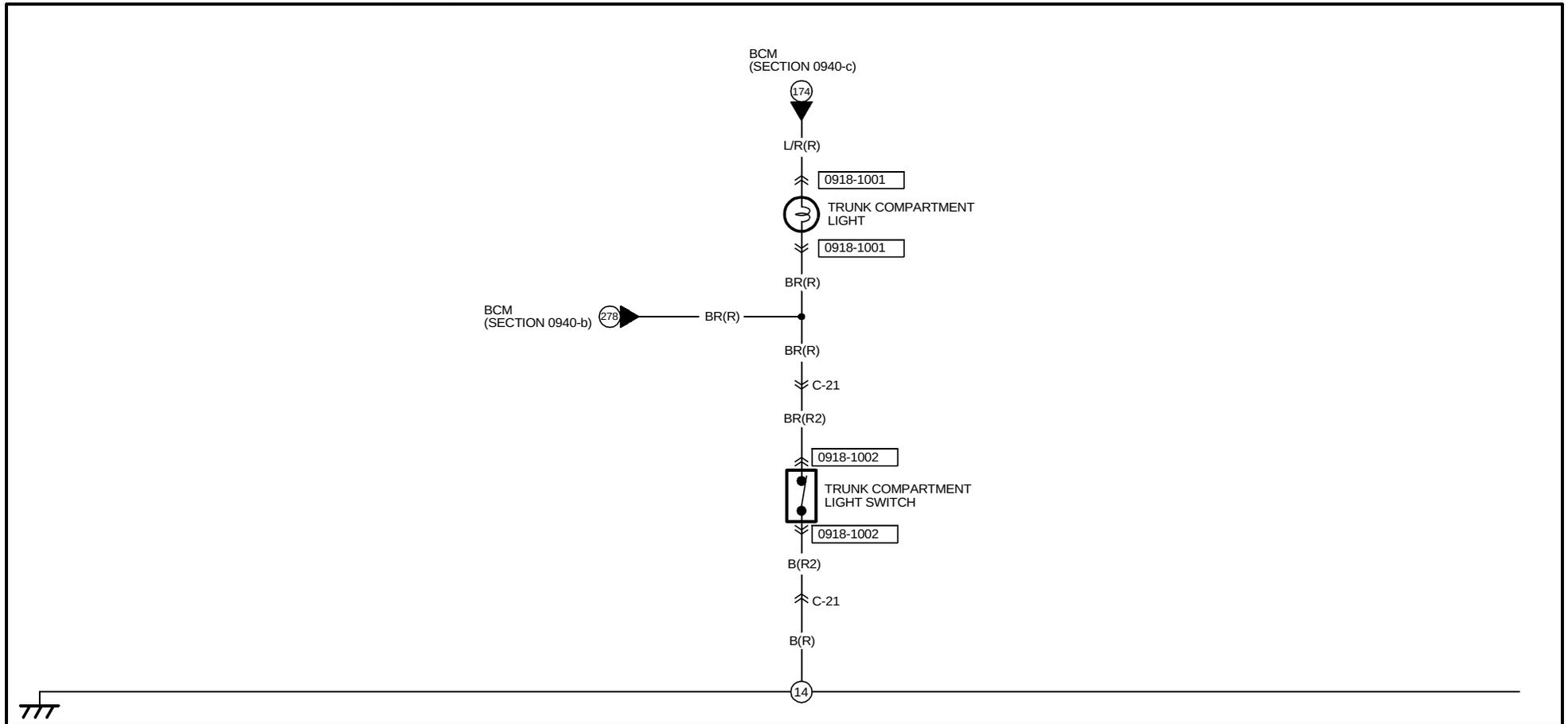

0918-1001 TRUNK COMPARTMENT LIGHT(R)	0918-1002 TRUNK COMPARTMENT LIGHT SWITCH(R2)		
	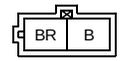		

HARNESS SYMBOL : (F) (E) (D) (R)

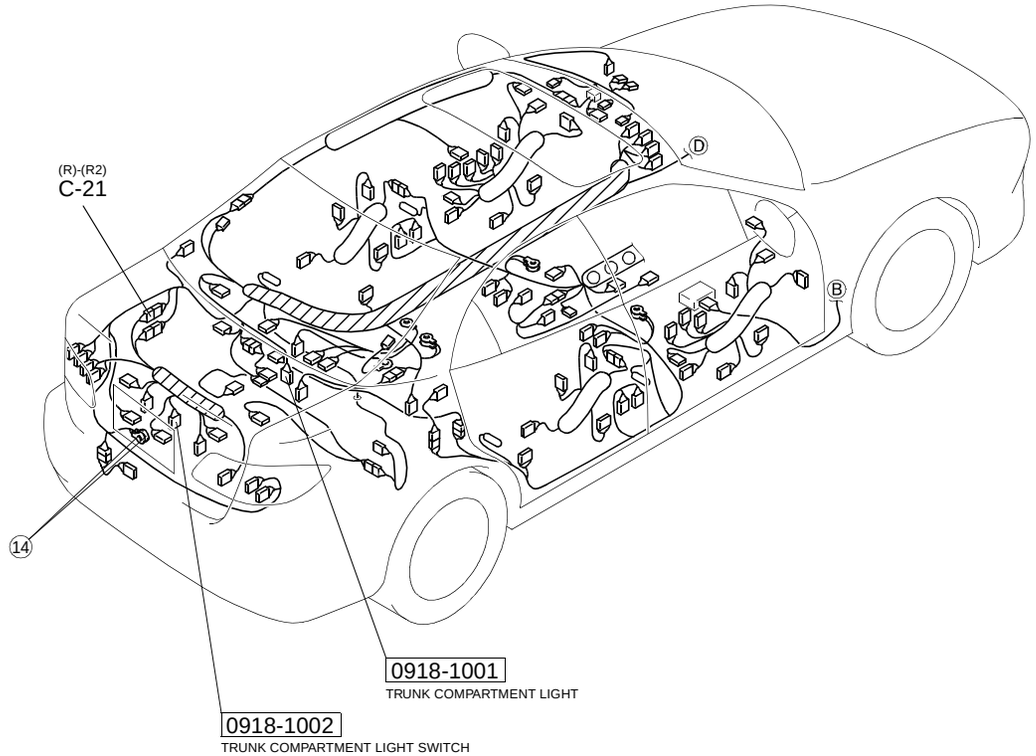

CARGO COMPARTMENT LIGHT (5HB, WAGON)

< > WITH SUNROOF ⁎: VACANT

BCM (SECTION 0940-c) 176
L/R(R)
0918-1101
CARGO COMPARTMENT LIGHT
0918-1101
BR(R)
BR(R)
BR(R)
F C-31
B(R3)
G C-35
BR(R2)
0918-1102
CARGO COMPARTMENT LIGHT SWITCH
0918-1102
B(R2) C-35 D B(R3) C-31 D B(R)
14
5HB

BR(R) 177 BCM (SECTION 0940-b)

BCM (SECTION 0918-9) 173 L/R(IN)
0918-1101
CARGO COMPARTMENT LIGHT
0918-1101
BR(IN) <G/B(IN)>
C-20
BR(R)
BR(R)
B(R)
G C-32
BR(R2)
0918-1102
CARGO COMPARTMENT LIGHT SWITCH
0918-1102
B(R2)
D C-32
B(R)
14
WAGON

0918-1101
CARGO COMPARTMENT LIGHT

(R)

(5HB)

(IN)

(WAGON)

0918-1102
CARGO COMPARTMENT LIGHT SWITCH(R2)

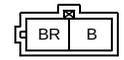

HARNESS SYMBOL : (F) (E) (D) (R)

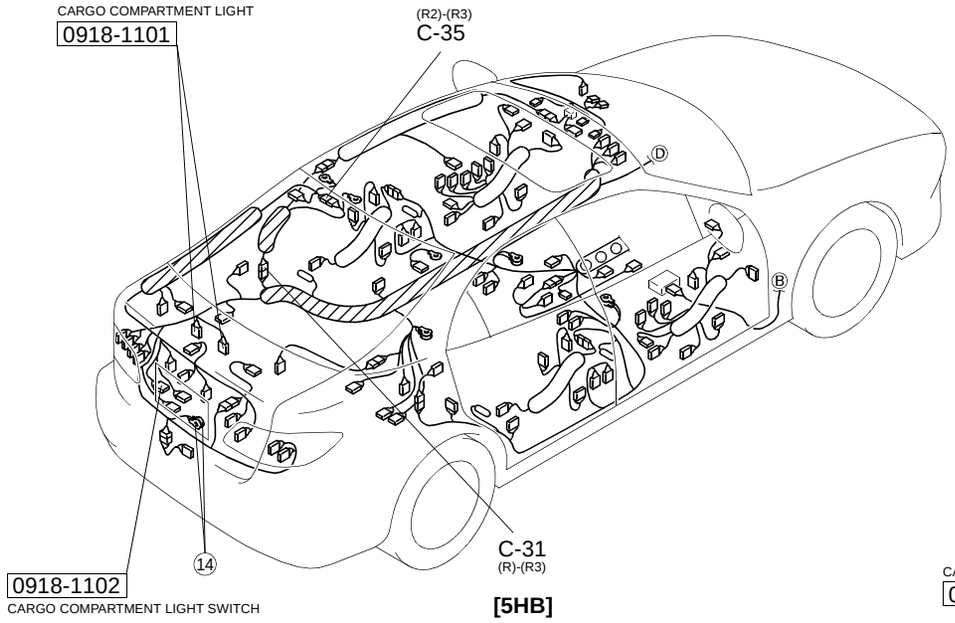

[5HB]

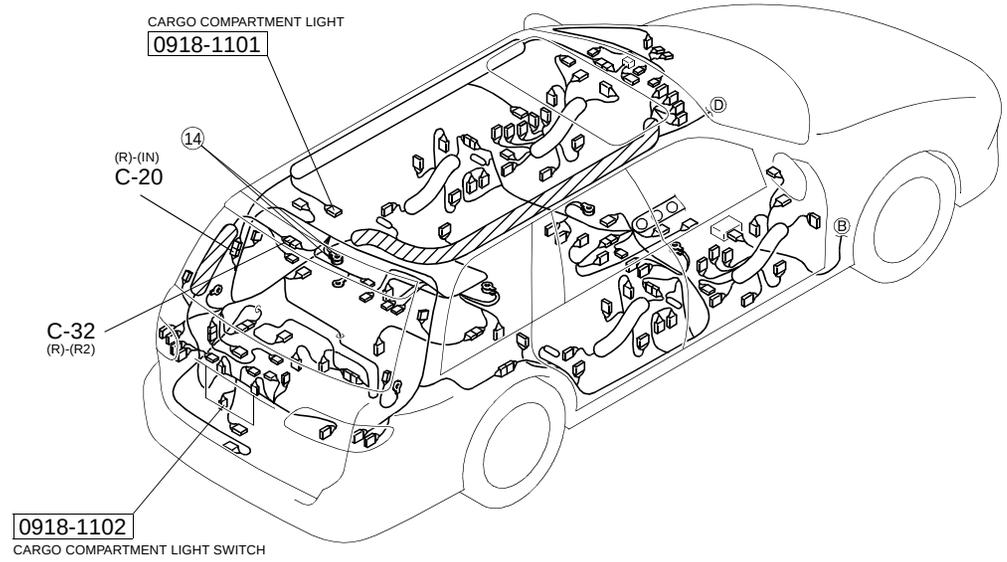

[WAGON]

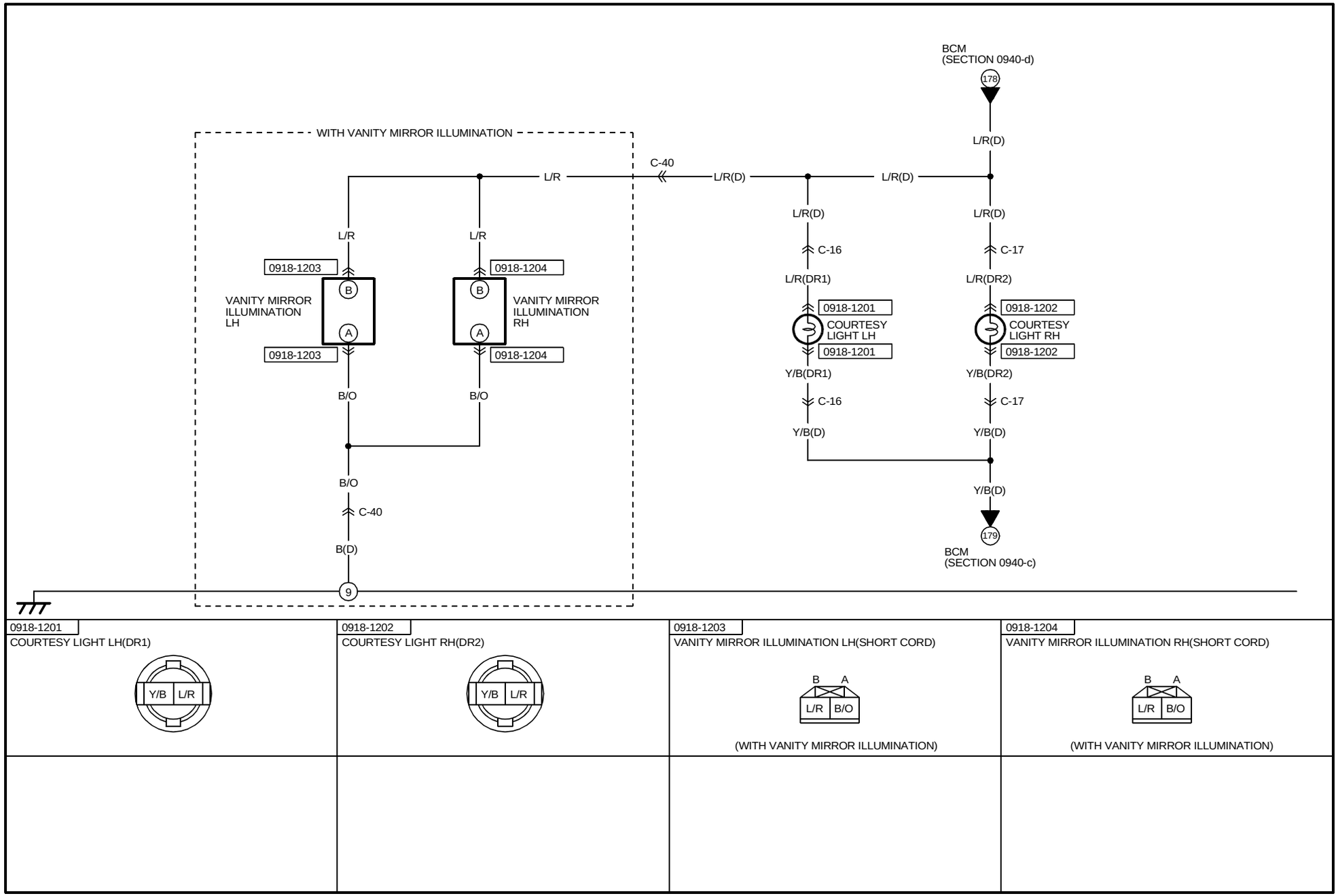

0918-1201	0918-1202	0918-1203	0918-1204
COURTESY LIGHT LH(DR1)	COURTESY LIGHT RH(DR2)	VANITY MIRROR ILLUMINATION LH(SHORT CORD)	VANITY MIRROR ILLUMINATION RH(SHORT CORD)
Y/B L/R	Y/B L/R	B A L/R B/O	B A L/R B/O
		(WITH VANITY MIRROR ILLUMINATION)	(WITH VANITY MIRROR ILLUMINATION)

HARNESS SYMBOL : (F) (E) (D) (R)

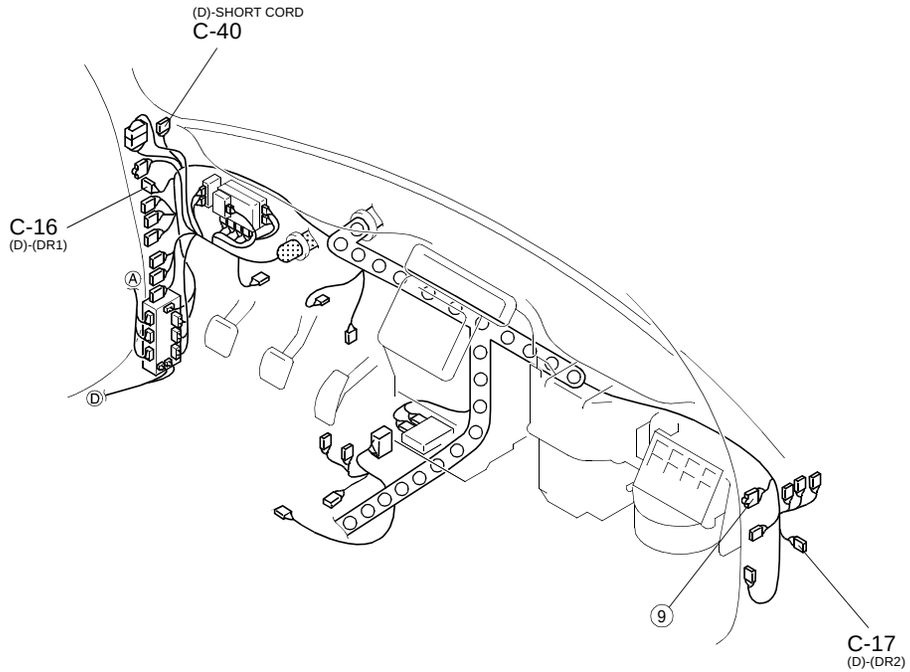

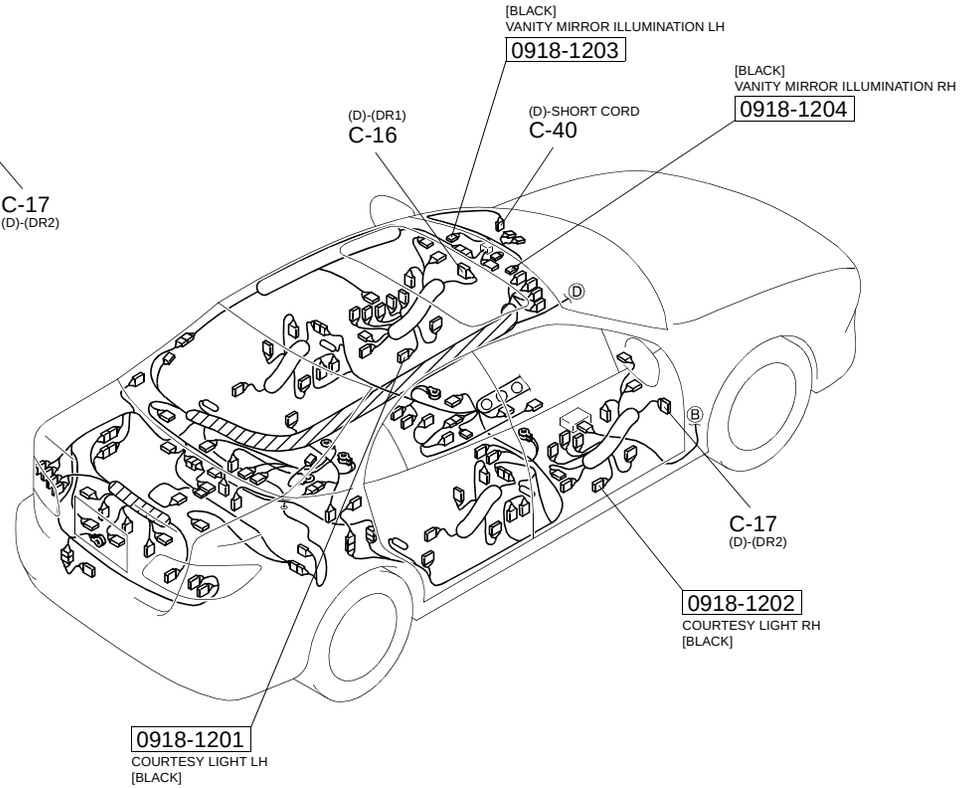

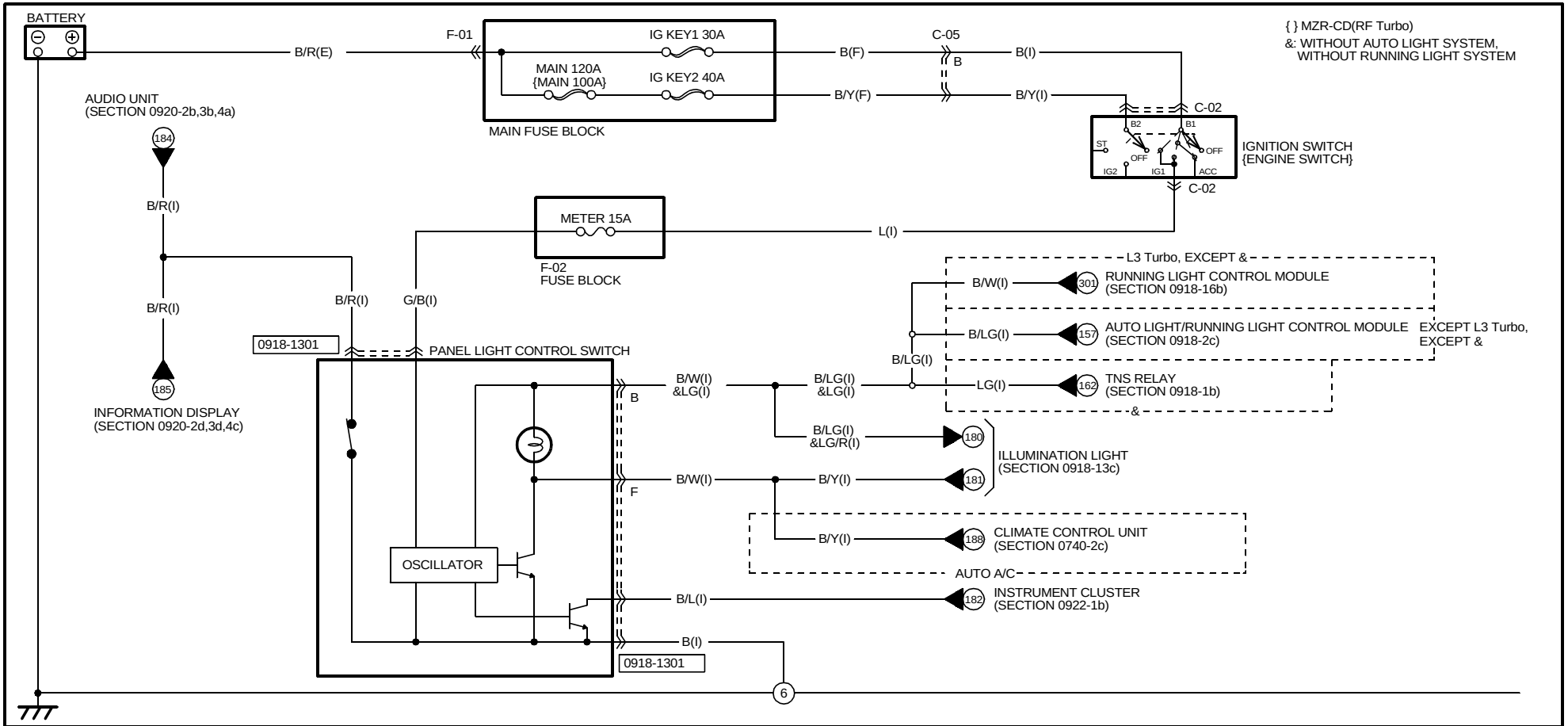

0918-1301

PANEL LIGHT CONTROL SWITCH(I)

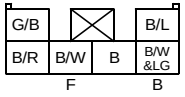

https://www.MyCarManual.com

HARNESS SYMBOL : (F) (E) (D) (R)

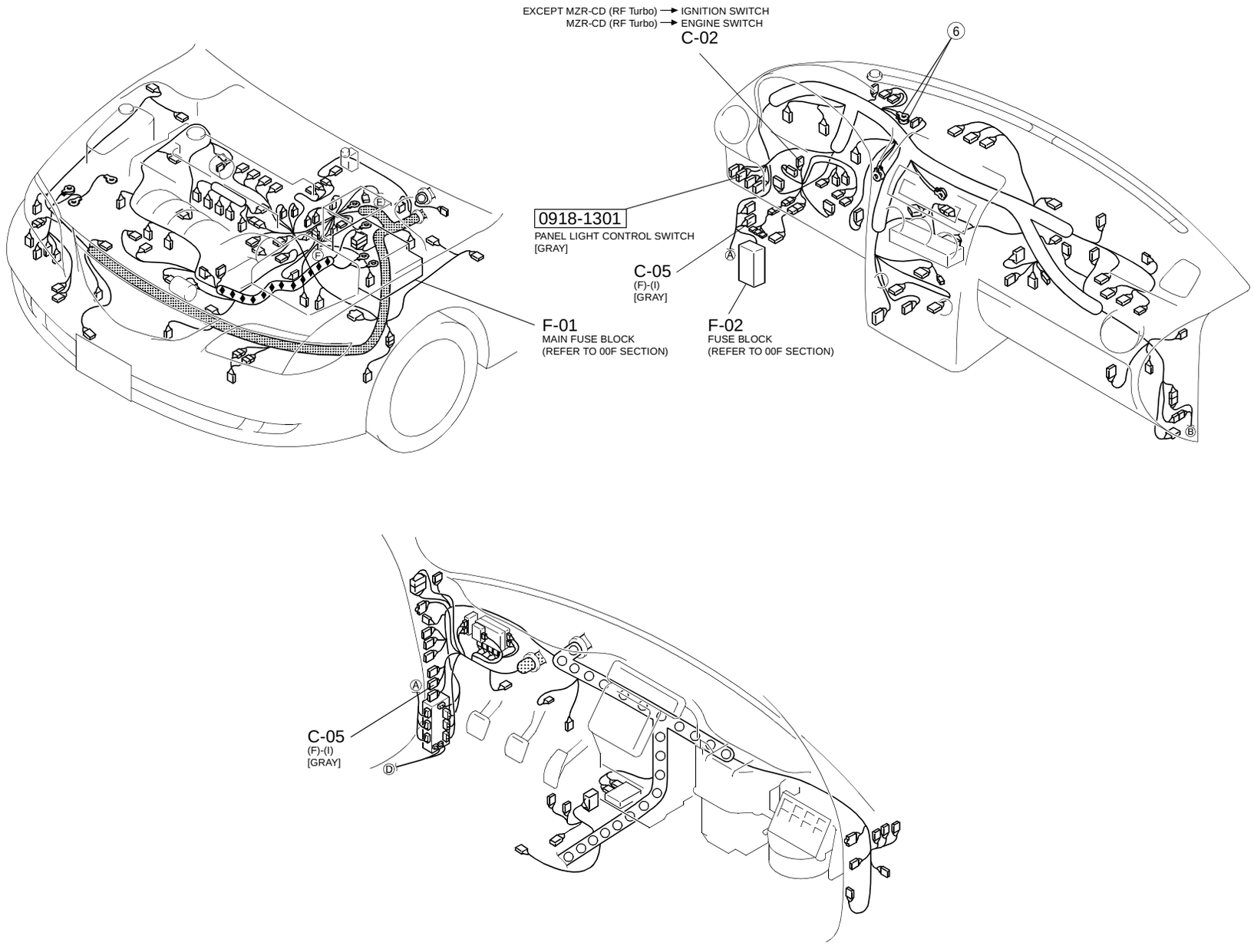

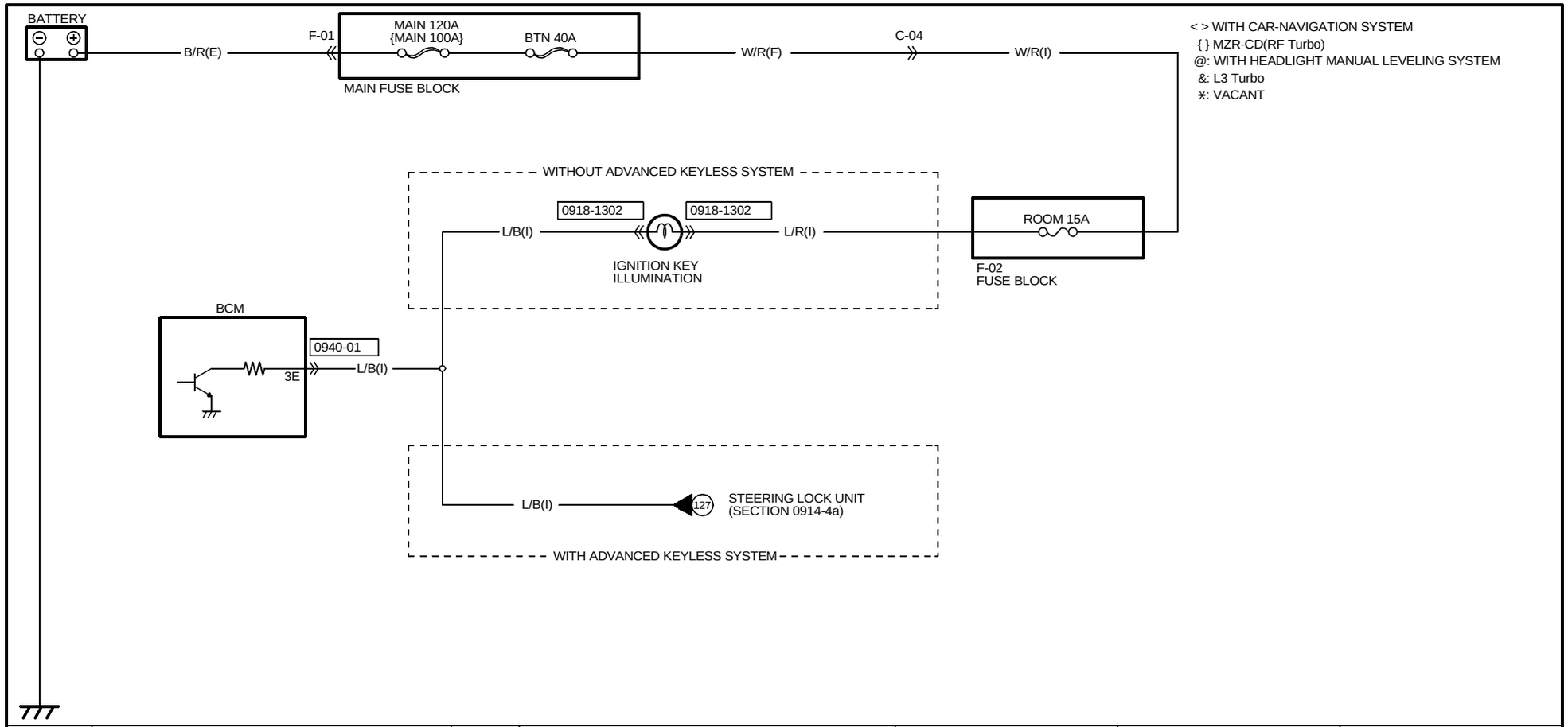

0918-1302

IGNITION KEY ILLUMINATION(I)

(WITHOUT ADVANCED KEYLESS SYSTEM)

0940-01

BCM

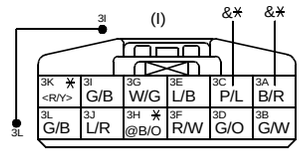

HARNESS SYMBOL : (F) (E) (D) (R)

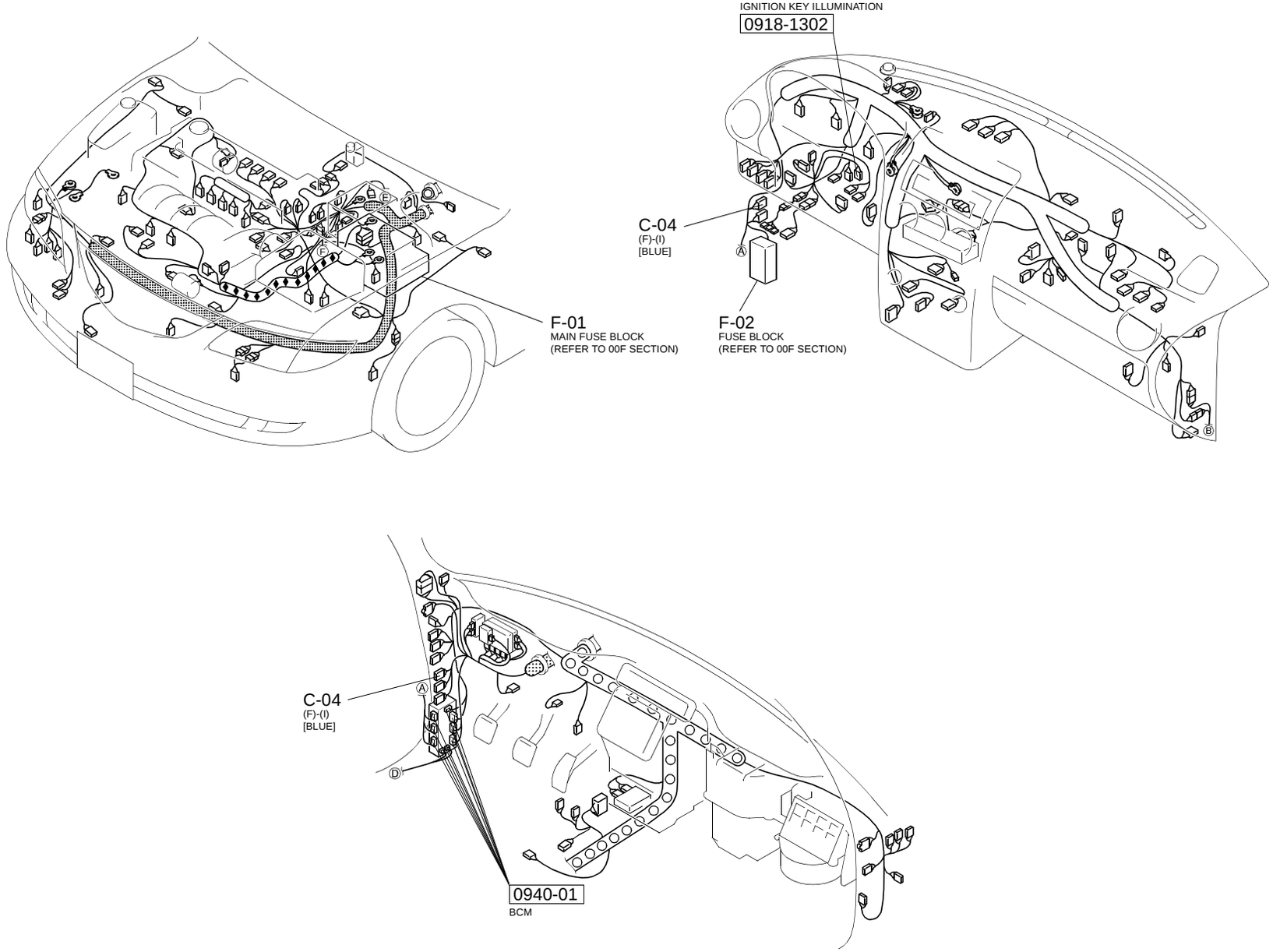

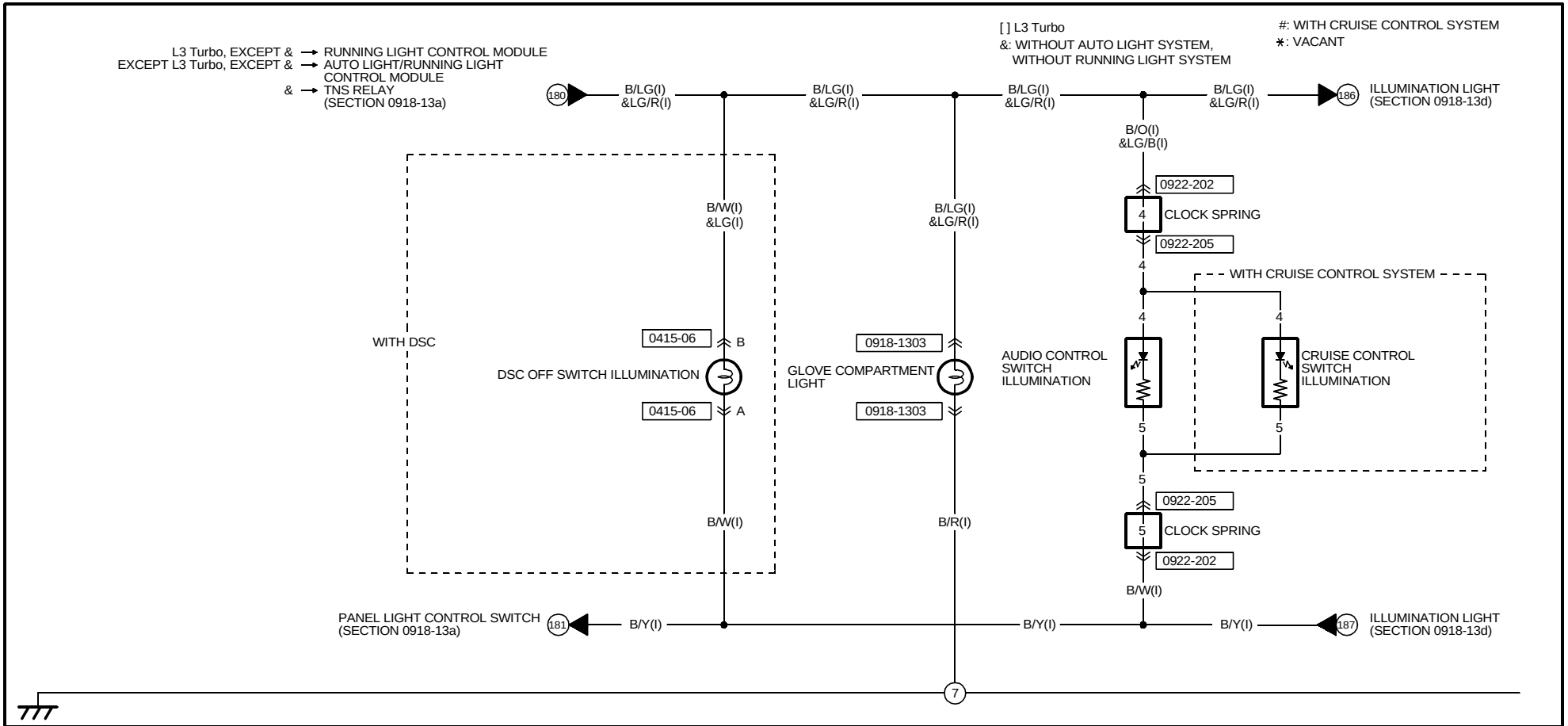

0918-1303

GLOVE COMPARTMENT LIGHT(I)

0415-06

DSC OFF SWITCH ILLUMINATION(I)

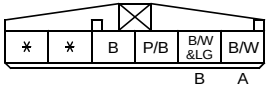

(WITH DSC)

0922-202

CLOCK SPRING(I)

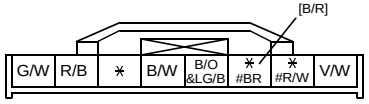

0922-205

AUDIO CONTROL SWITCH ILLUMINATION/CRUISE CONTROL SWITCH ILLUMINATION(CLOCK SPRING) ← WITH CRUISE CONTROL SYSTEM
AUDIO CONTROL SWITCH ILLUMINATION(CLOCK SPRING) ← WITHOUT CRUISE CONTROL SYSTEM

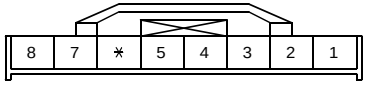

TERMINALS OF THIS CONNECTOR ARE INDICATED BY NUMBERS.

https://www.MyCarManual.com

HARNESS SYMBOL : (F) (E) (D) (R)

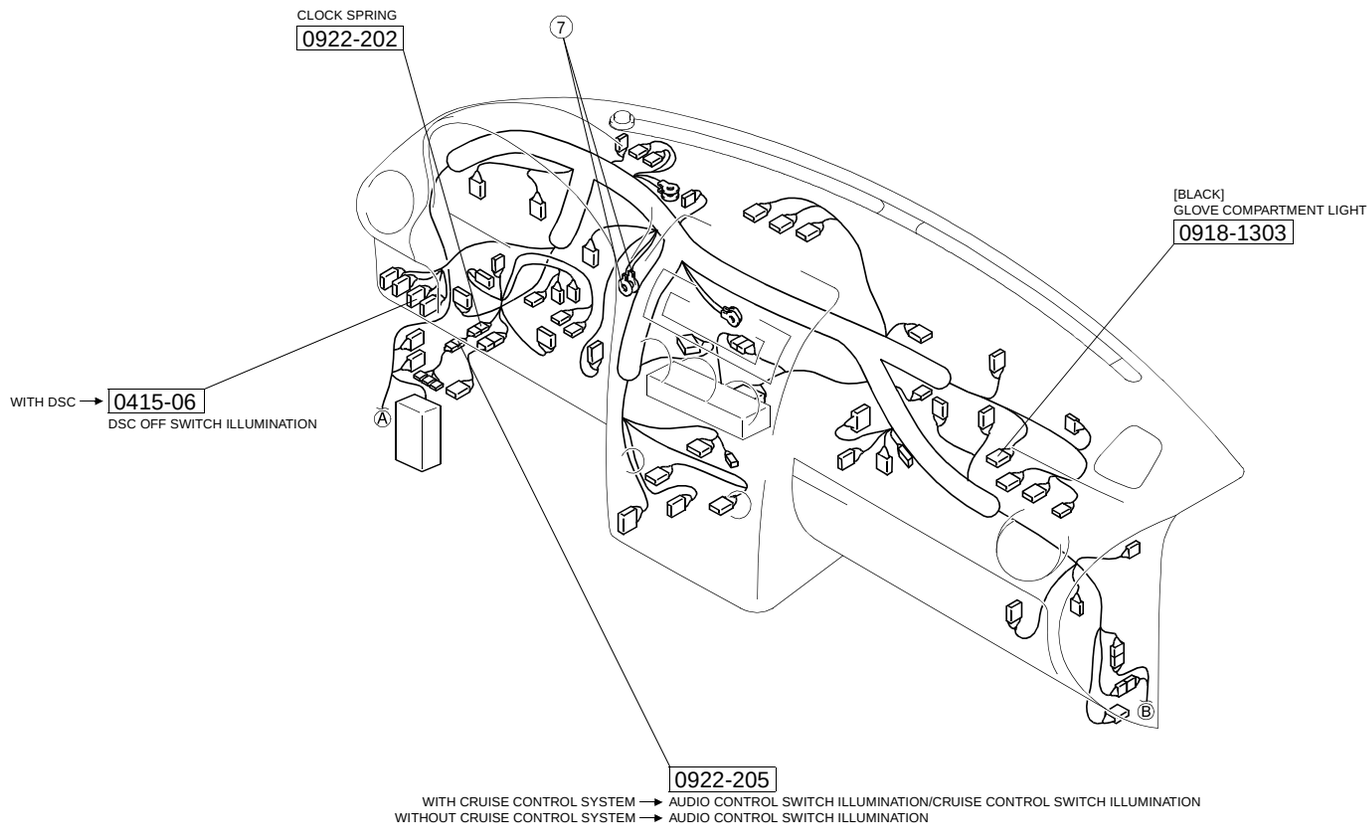

< > WITH CAR-NAVIGATION SYSTEM
&: WITHOUT AUTO LIGHT SYSTEM, WITHOUT RUNNING LIGHT SYSTEM
*: VACANT

L3 Turbo, EXCEPT & → RUNNING LIGHT CONTROL MODULE
EXCEPT L3 Turbo, EXCEPT & → AUTO LIGHT/RUNNING LIGHT CONTROL MODULE
& → TNS RELAY (SECTION 0918-13c)

186 — B/LG(I) &LG/R(I) — B/LG(I) &LG/R(I) — B/LG(I) &LG/R(I) — B/LG(I) &LG/R(I) → 190 ILLUMINATION LIGHT (SECTION 0918-13e)

B/LG(I) &LG/R(I) → 191 INFORMATION DISPLAY (SECTION 0920-2d,3d,4c)

B/LG(I) &LG/R(I) → 192 LCD UNIT (SECTION 0920-5b)

WITH CAR-NAVIGATION SYSTEM

B/LG(I) &LG/R(I)

B/W(I) &LG(I)

BOSE TYPE AUDIO/WITHOUT CAR-NAVIGATION SYSTEM → 0920-201
BOSE TYPE AUDIO/WITH CAR-NAVIGATION SYSTEM → 0920-301
STANDARD TYPE AUDIO → 0920-401 — 1E

AUDIO UNIT ILLUMINATION

B — 0918-1401

HEADLIGHT MANUAL LEVELING SWITCH ILLUMINATION

A — 0918-1401

BOSE TYPE AUDIO/WITHOUT CAR-NAVIGATION SYSTEM → 0920-201
BOSE TYPE AUDIO/WITH CAR-NAVIGATION SYSTEM → 0920-301
STANDARD TYPE AUDIO → 0920-401 — 1G

WITH HEADLIGHT MANUAL LEVELING SYSTEM

B/Y(I) — B/W(I)

PANEL LIGHT CONTROL SWITCH (SECTION 0918-13c) — 187 — B/Y(I) — B/Y(I) — B/Y(I) — 193 ILLUMINATION LIGHT (SECTION 0918-13e)

INFORMATION DISPLAY (SECTION 0920-2d,3d,4c) — 189 — B/Y(I)

0918-1401
HEADLIGHT MANUAL LEVELING SWITCH ILLUMINATION(I)

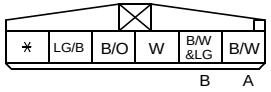

(WITH HEADLIGHT MANUAL LEVELING SYSTEM)

0920-201 ← WITHOUT CAR-NAVIGATION SYSTEM
0920-301 ← WITH CAR-NAVIGATION SYSTEM
AUDIO UNIT ILLUMINATION(I)

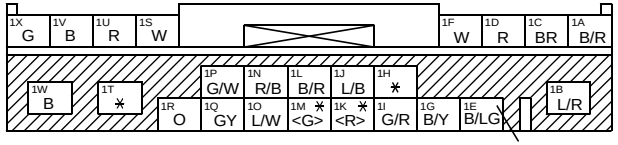

(BOSE TYPE AUDIO) &LG/R

0920-401
AUDIO UNIT ILLUMINATION(I)

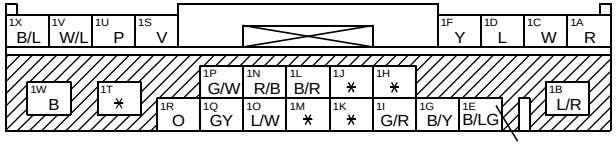

(STANDARD TYPE AUDIO) &LG/R

https://www.MyCarManual.com

HARNESS SYMBOL : (F) (E) (D) (R)

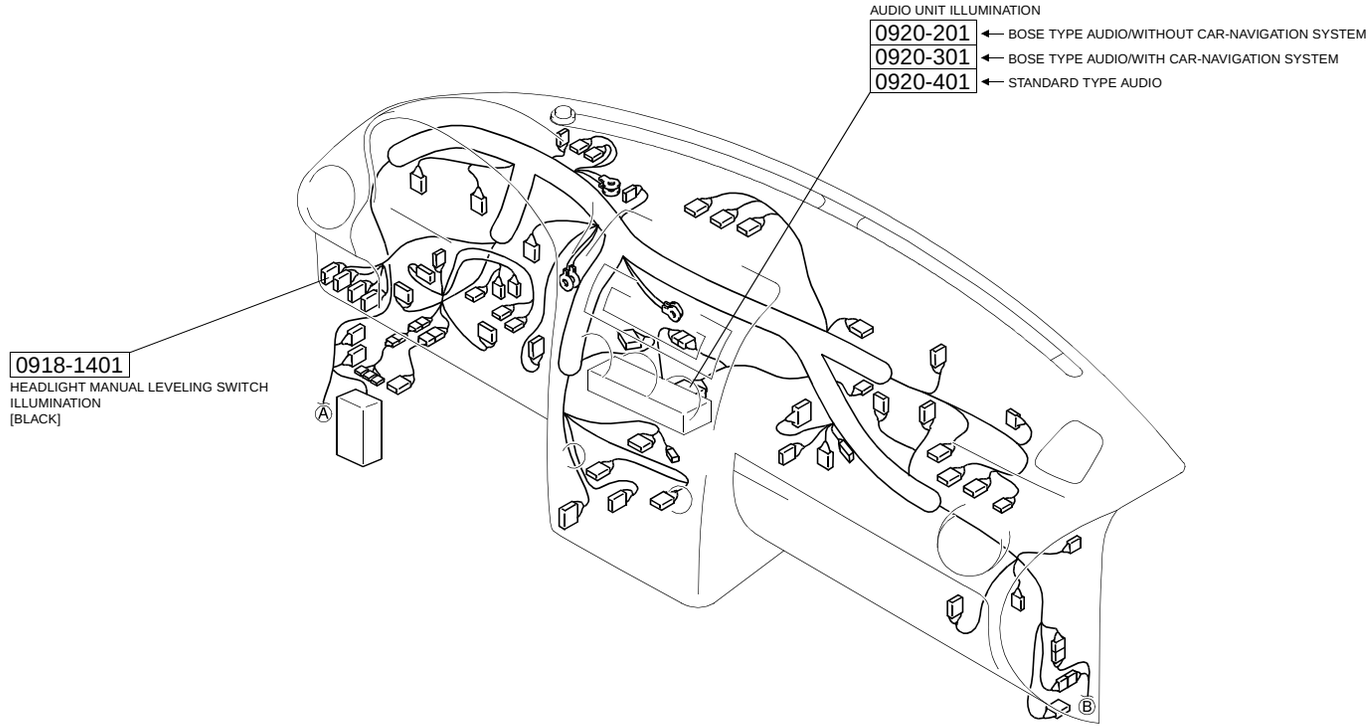

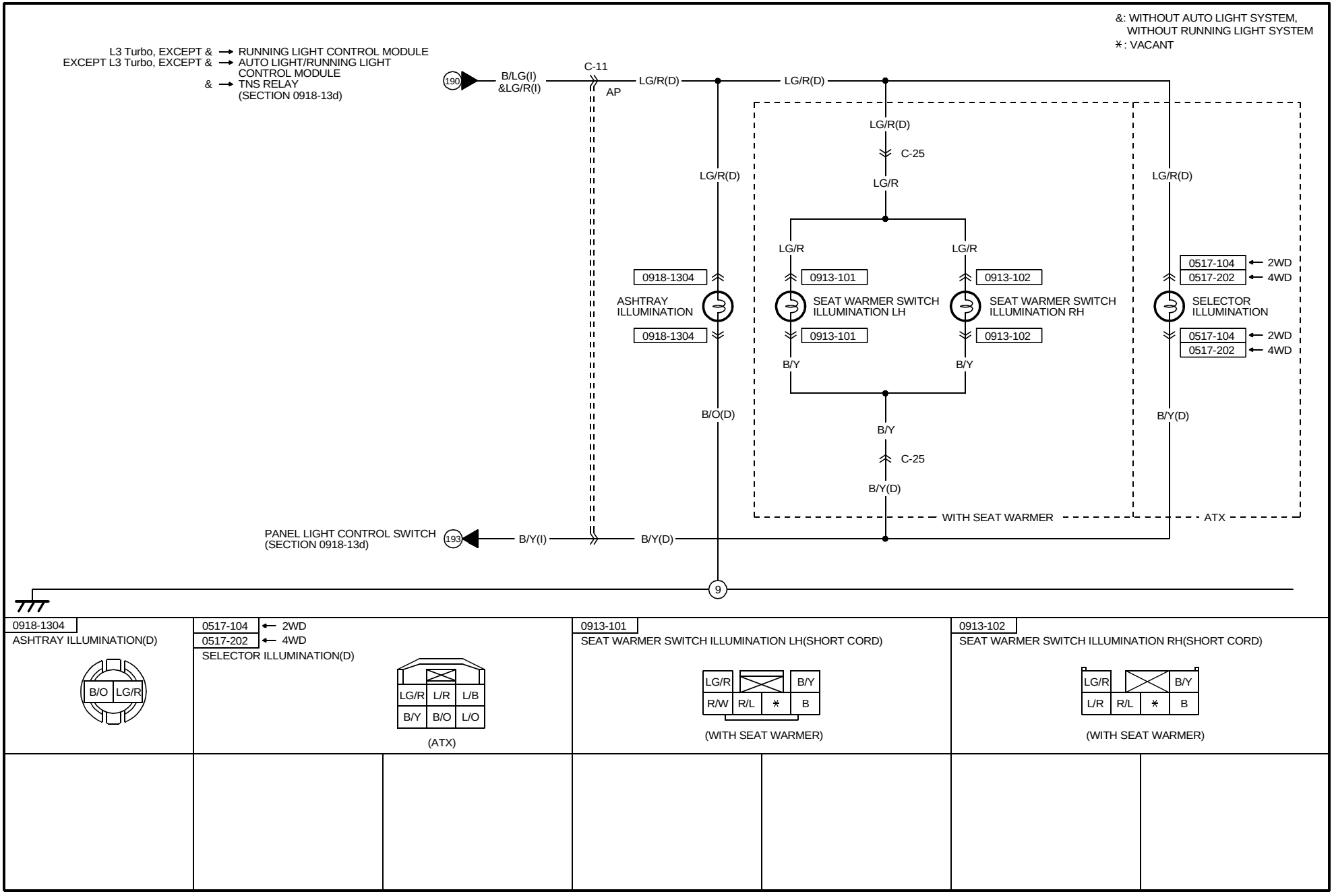

0918-1304	0517-104 ← 2WD 0517-202 ← 4WD	0913-101	0913-102
ASHTRAY ILLUMINATION(D)	SELECTOR ILLUMINATION(D)	SEAT WARMER SWITCH ILLUMINATION LH(SHORT CORD)	SEAT WARMER SWITCH ILLUMINATION RH(SHORT CORD)
B/O, LG/R	LG/R, L/R, L/B, B/Y, B/O, L/O (ATX)	LG/R, B/Y, R/W, R/L, *, B (WITH SEAT WARMER)	LG/R, B/Y, L/R, R/L, *, B (WITH SEAT WARMER)

https://www.MyCarManual.com

HARNESS SYMBOL : (F) (E) (D) (R)

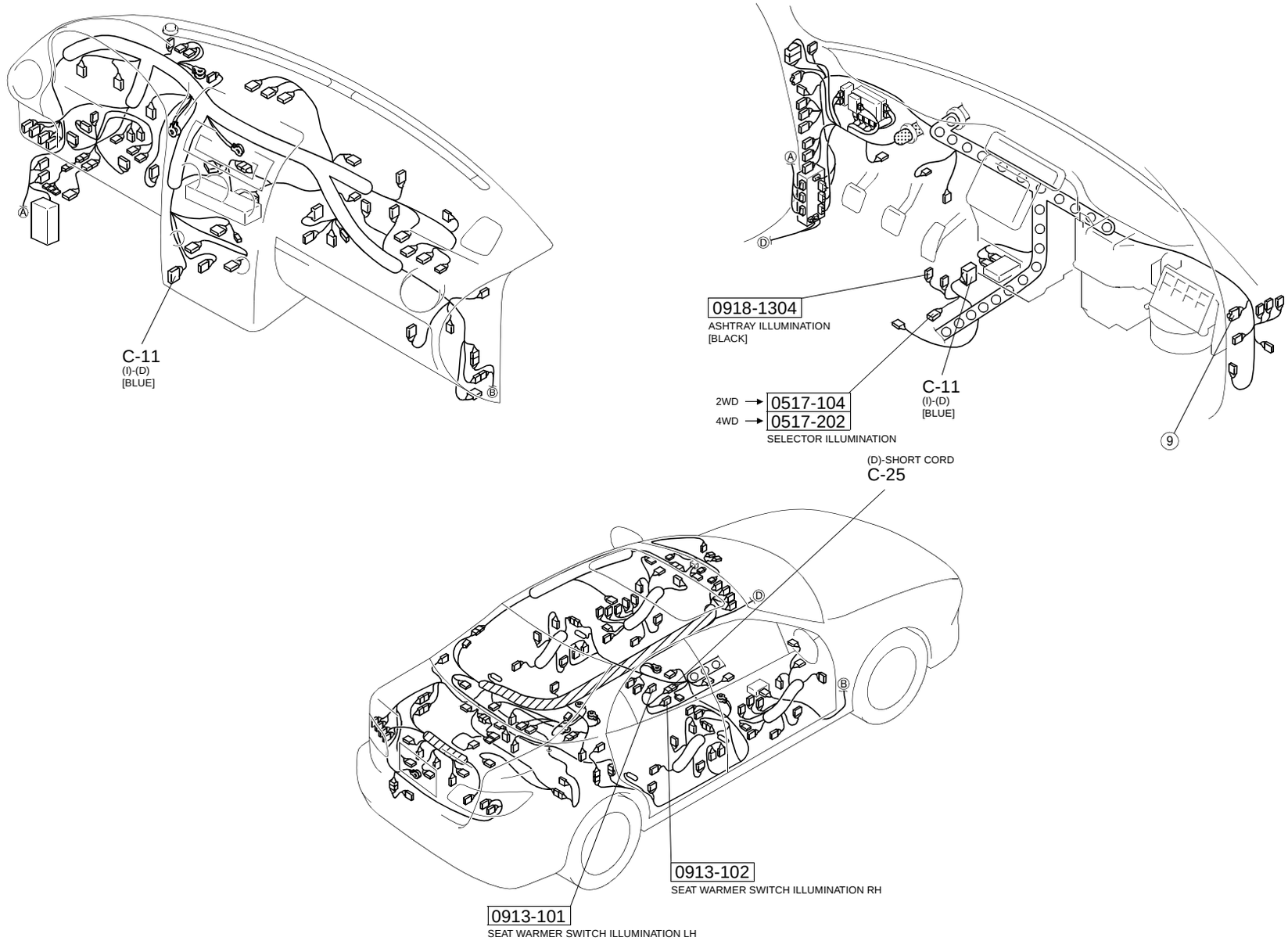

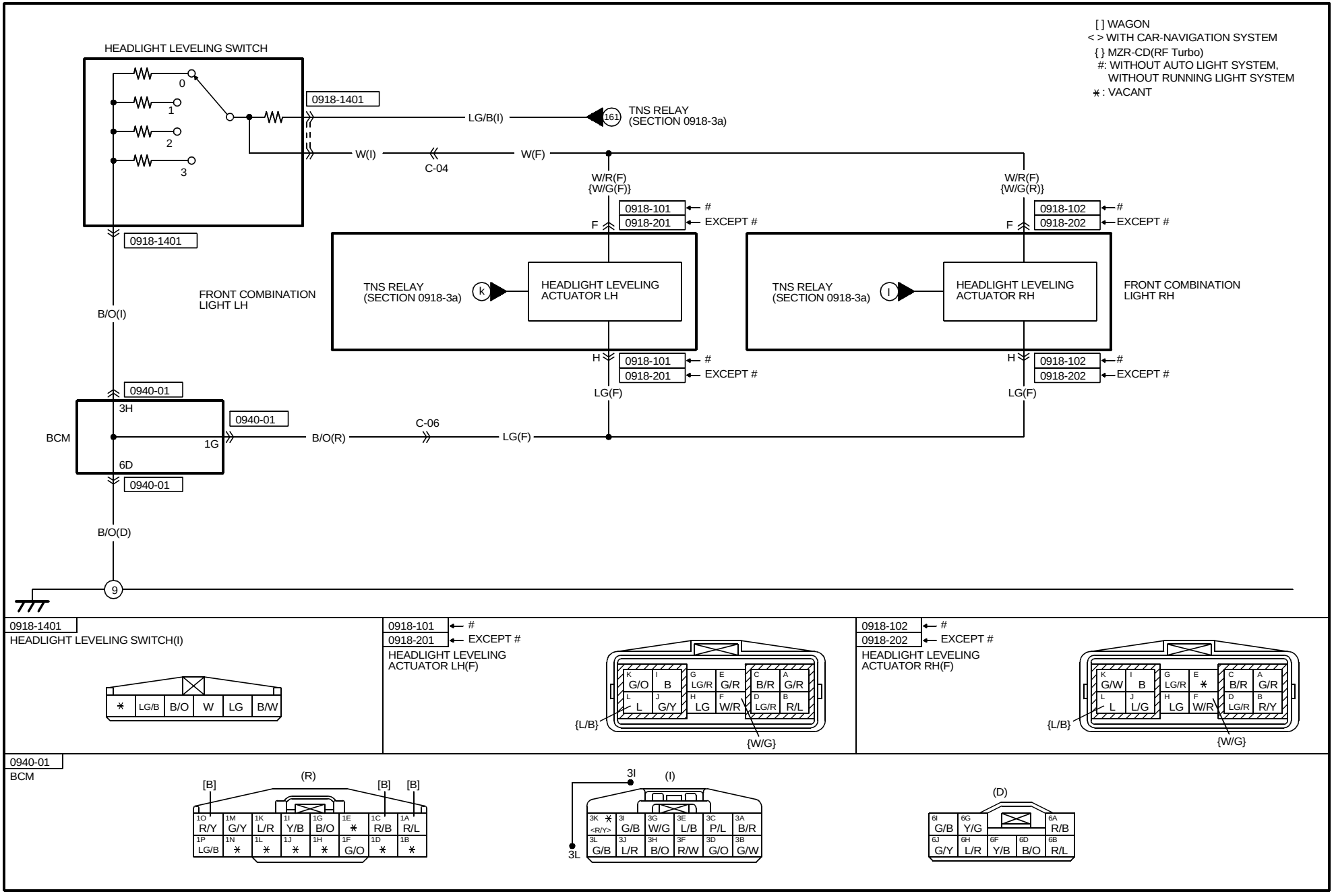

https://www.MyCarManual.com

HARNESS SYMBOL : (F) (E) (D) (R)

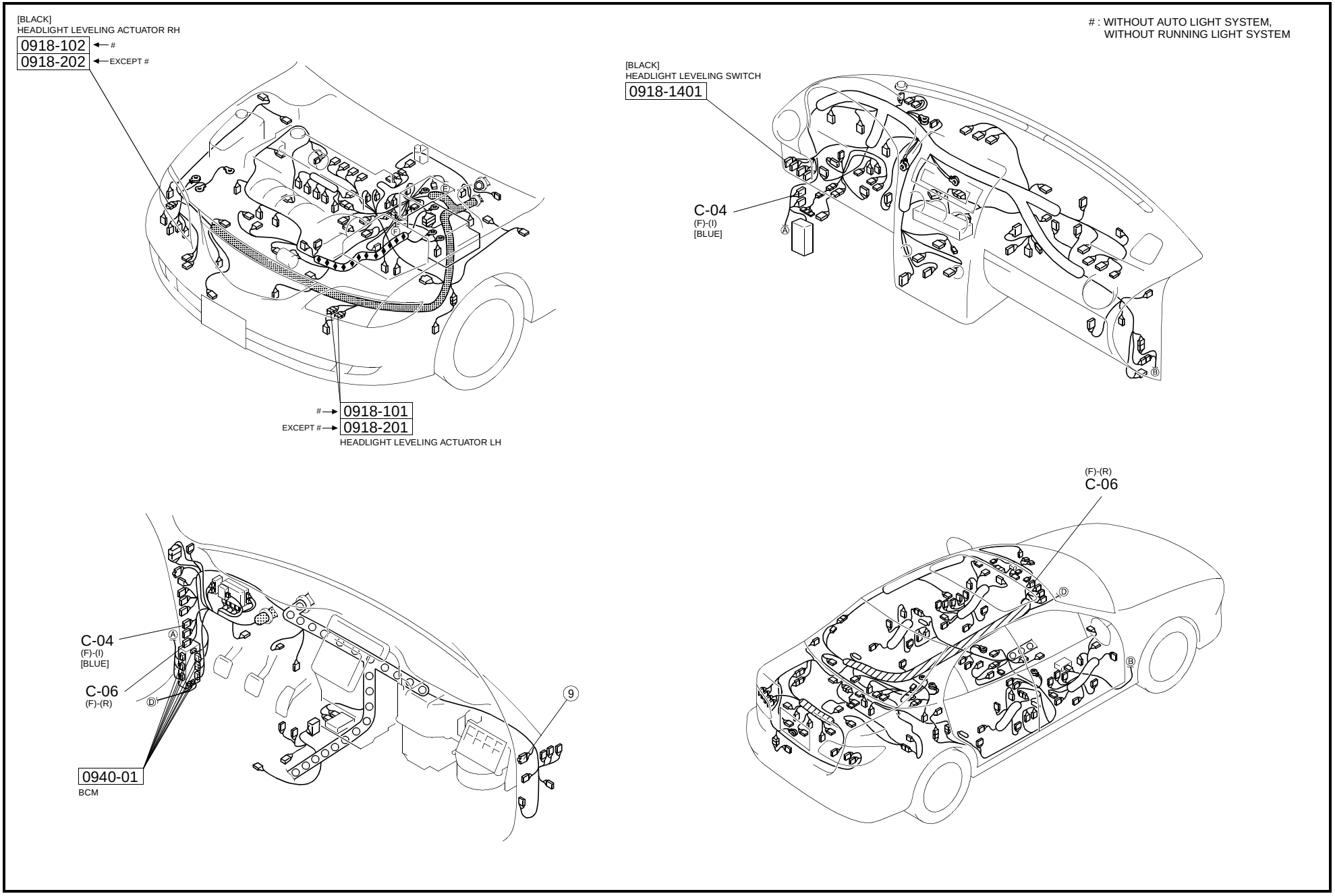

https://www.MyCarManual.com

< > L3 Turbo
{ } MZR-CD(RF Turbo)
( ) 4WD
#: WITHOUT AUTO LIGHT SYSTEM, WITHOUT RUNNING LIGHT SYSTEM
⁎: VACANT

REAR AUTO LEVELING SENSOR
B A D
0918-1502
W (W/G) B (W/B) R (W)
4WD
C-42
W/G(R) W/B(R) W(R)
C-06
W(F)
W/B(F)

FRONT AUTO LEVELING SENSOR
D A B
0918-1501
R B W
C-44
W(F) W/B(F)
W/R(F)

BCM
(SECTION 0940-d)
195
G/R(F)
G/R(F)
196
197
198
AUTO LEVELING CONTROL MODULE(SUB)
(SECTION 0918-15b)
G/R(F)
W/R(F) {W/G(F)}
LG(F)

ABS HU/CM ← WITHOUT DSC
DSC HU/CM ← WITH DSC
(SECTION 0940-b)
194
G/R(F)
W/G(F) W(F) W/B(F)

0918-101 ← #
0918-201 ← EXCEPT L3 Turbo, EXCEPT #
0918-1601 ← L3 Turbo, EXCEPT #

FRONT COMBINATION LIGHT LH
E 2D 2A 2B 2C A F H

HEADLIGHT LEVELING ACTUATOR LH
23 22 21 20
5 16 13 14 15 1 6 8

0918-103 ← #
0918-203 ← EXCEPT L3 Turbo, EXCEPT #
0918-1603 ← L3 Turbo, EXCEPT #

T S R Q P F K G H L I M

AUTO LEVELING CONTROL MODULE(MAIN)

0918-1501
FRONT AUTO LEVELING SENSOR(SHORT CORD)

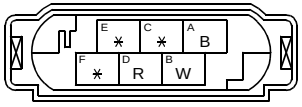

0918-1502
REAR AUTO LEVELING SENSOR(SHORT CORD)

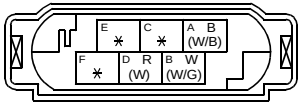

0918-101 ← #
0918-201 ← EXCEPT L3 Turbo, EXCEPT #
0918-1601 ← L3 Turbo, EXCEPT #
FRONT(F)-FRONT COMBINATION LIGHT LH

(F)

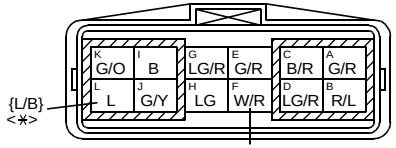

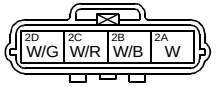

(FRONT COMBINATION LIGHT LH)

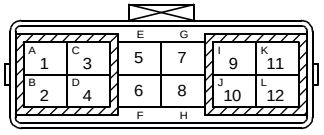

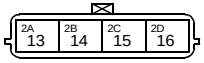

TERMINALS OF THIS CONNECTOR ARE INDICATED BY NUMBERS.

0918-103 ← #
0918-203 ← EXCEPT L3 Turbo, EXCEPT #
0918-1603 ← L3 Turbo, EXCEPT #
AUTO LEVELING CONTROL MODULE(MAIN)
(FRONT COMBINATION LIGHT LH)

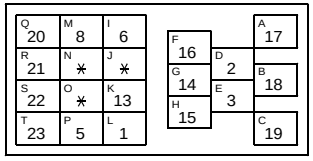

NOTE:SEEN FROM TERMINAL SIDE

TERMINALS OF THIS CONNECTOR ARE INDICATED BY NUMBERS.

https://www.MyCarManual.com

HARNESS SYMBOL : (F) (E) (D) (R)

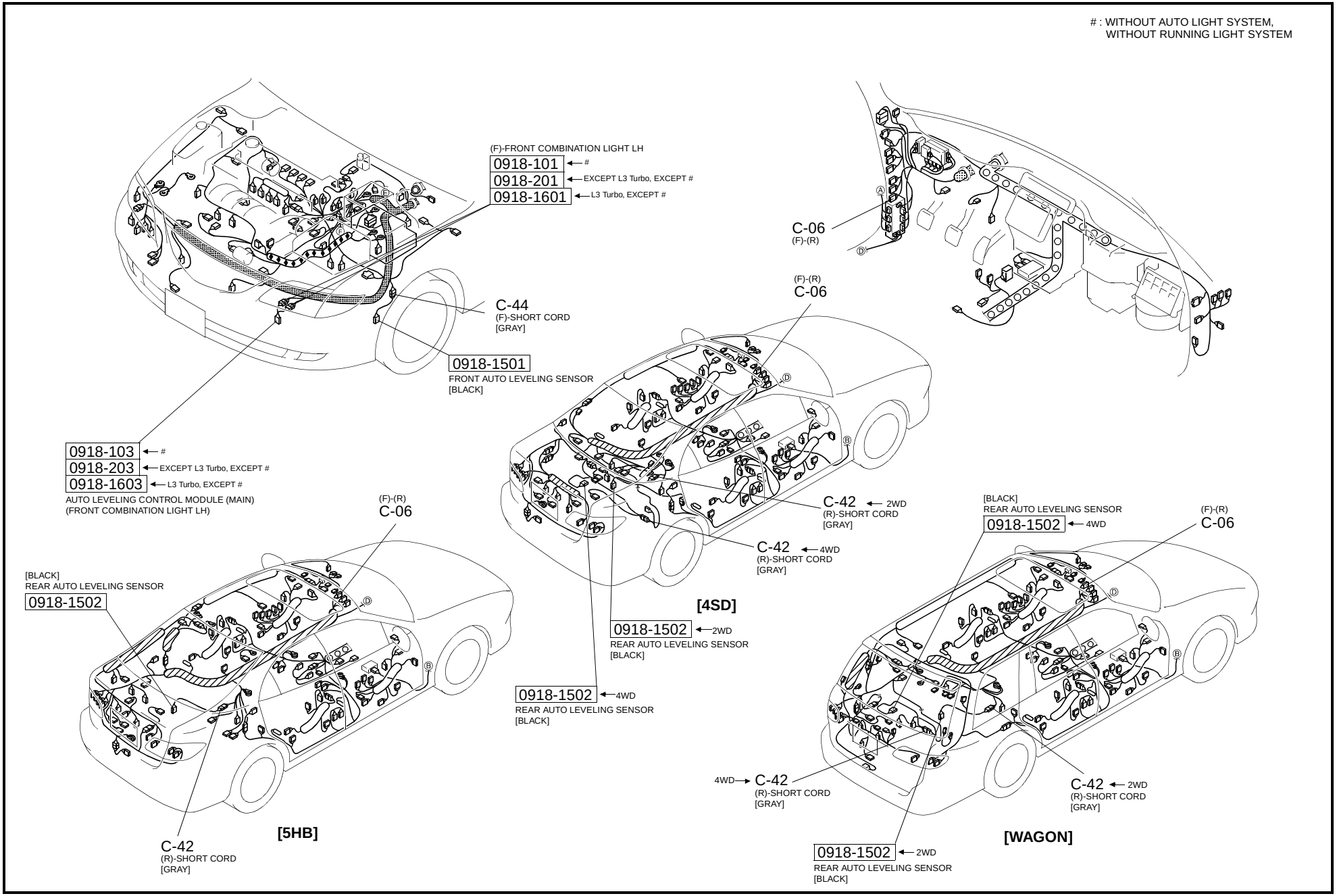

https://www.MyCarManual.com

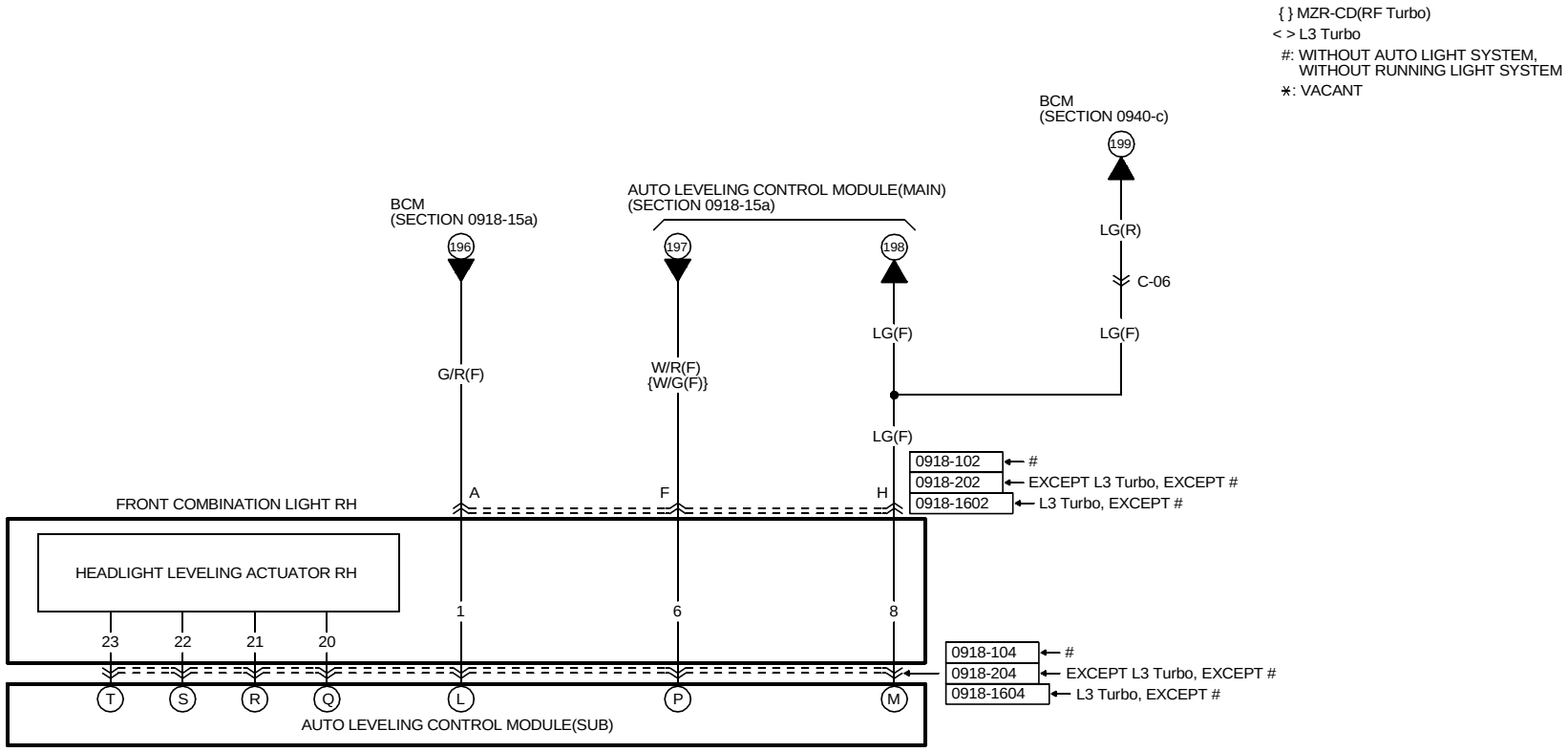

0918-102 ← #
0918-202 ← EXCEPT L3 Turbo, EXCEPT #
0918-1602 ← L3 Turbo, EXCEPT #

FRONT(F)-FRONT COMBINATION LIGHT RH

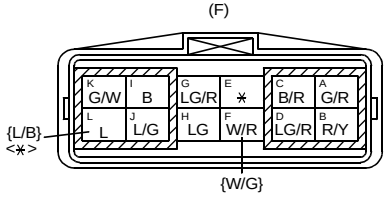

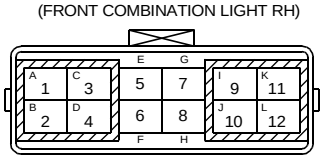

TERMINALS OF THIS CONNECTOR ARE INDICATED BY NUMBERS.

0918-104 ← #
0918-204 ← EXCEPT L3 Turbo, EXCEPT #
0918-1604 ← L3 Turbo, EXCEPT #

AUTO LEVELING CONTROL MODULE(SUB)(FRONT COMBINATION LIGHT RH)

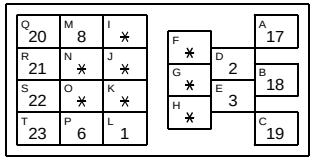

NOTE:SEEN FROM TERMINAL SIDE

TERMINALS OF THIS CONNECTOR ARE INDICATED BY NUMBERS.

https://www.MyCarManual.com

HARNESS SYMBOL : (F) (E) (D) (R)

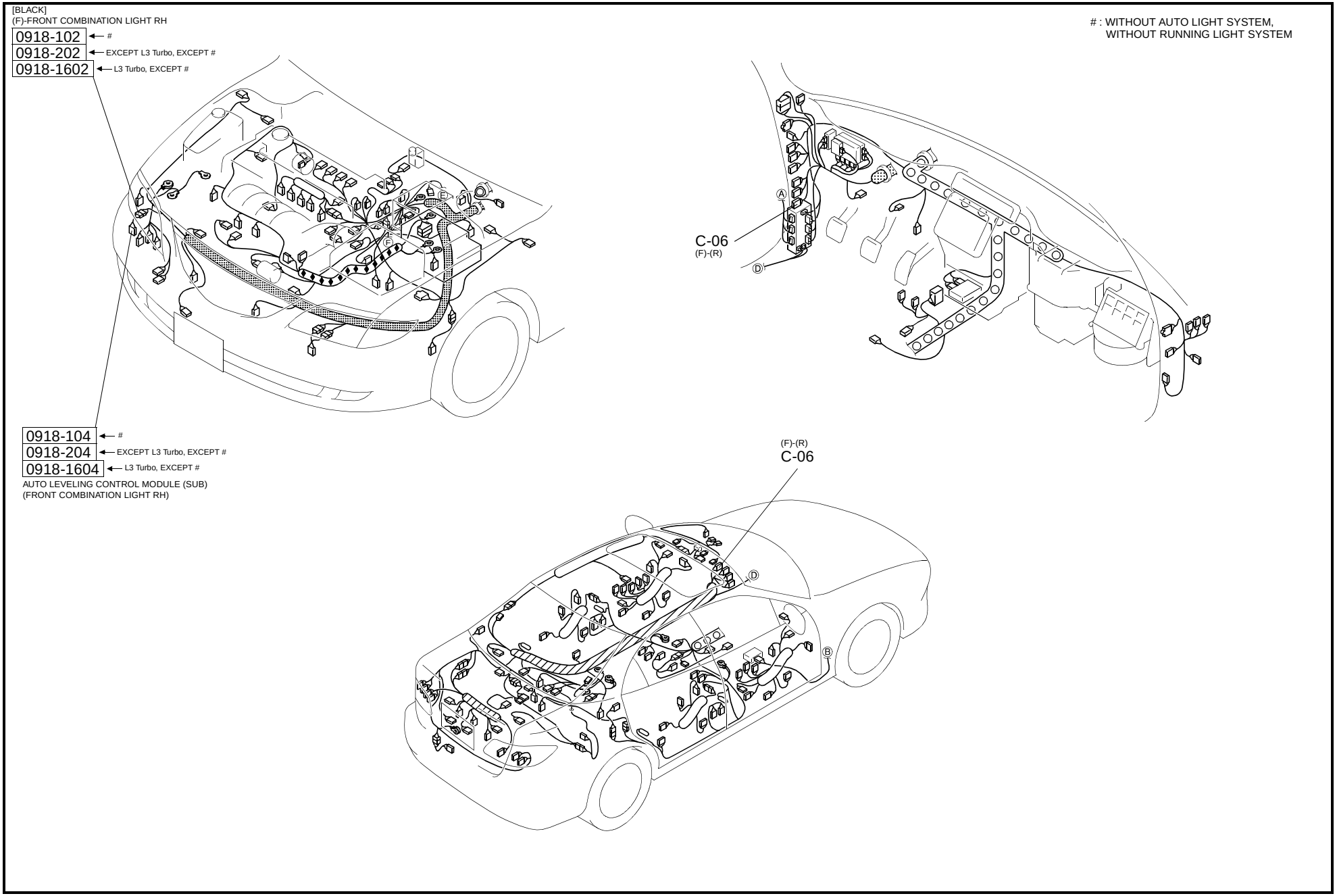

https://www.MyCarManual.com

HEADLIGHT (WITH RUNNING LIGHT SYSTEM : L3 Turbo)

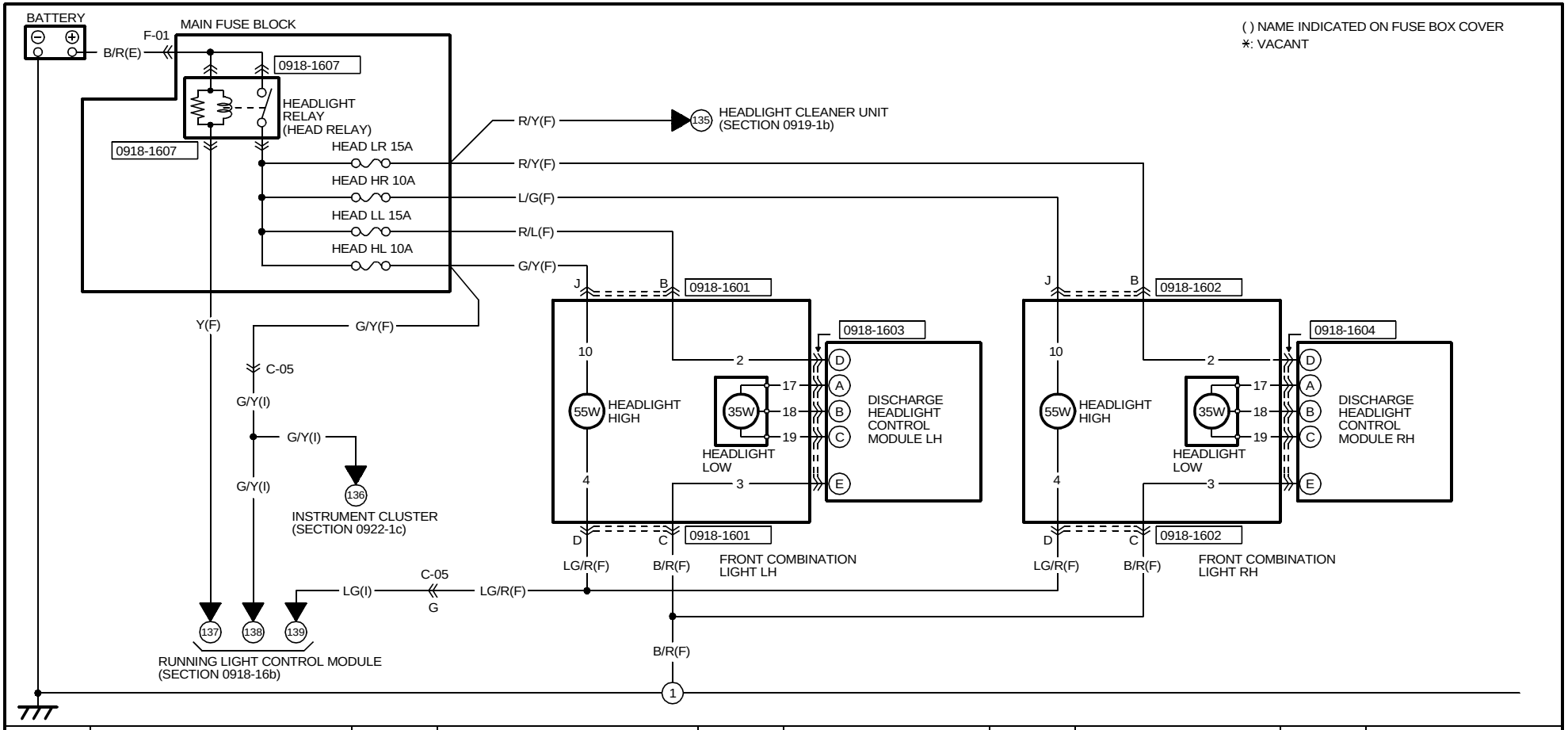

0918-1601
FRONT(F)-FRONT COMBINATION LIGHT LH
(F)

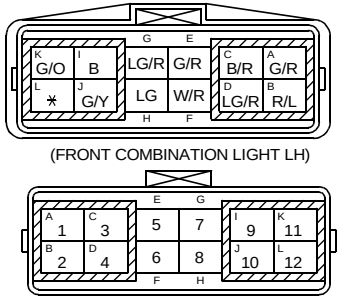

(FRONT COMBINATION LIGHT LH)

TERMINALS OF THIS CONNECTOR ARE INDICATED BY NUMBERS.

0918-1602
FRONT(F)-FRONT COMBINATION LIGHT RH
(F)

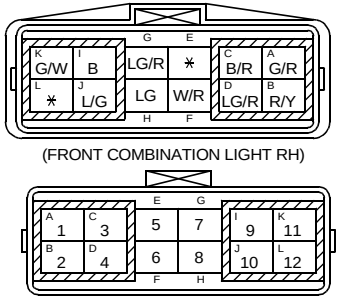

(FRONT COMBINATION LIGHT RH)

TERMINALS OF THIS CONNECTOR ARE INDICATED BY NUMBERS.

0918-1603
DISCHARGE HEADLIGHT CONTROL MODULE LH
(FRONT COMBINATION LIGHT LH)

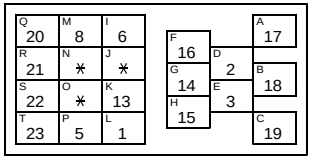

NOTE:SEEN FROM TERMINAL SIDE

TERMINALS OF THIS CONNECTOR ARE INDICATED BY NUMBERS.

(DISCHARGE TYPE)

0918-1604
DISCHARGE HEADLIGHT CONTROL MODULE RH
(FRONT COMBINATION LIGHT RH)

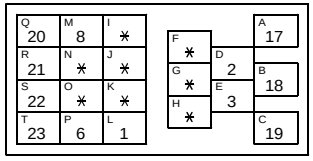

NOTE:SEEN FROM TERMINAL SIDE

TERMINALS OF THIS CONNECTOR ARE INDICATED BY NUMBERS.

(DISCHARGE TYPE)

0918-1607
HEADLIGHT RELAY(F)

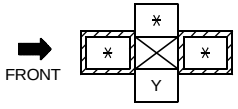

NOTE:SEEN FROM TERMINAL SIDE

https://www.MyCarManual.com

HARNESS SYMBOL : (F) (E) (D) (R)

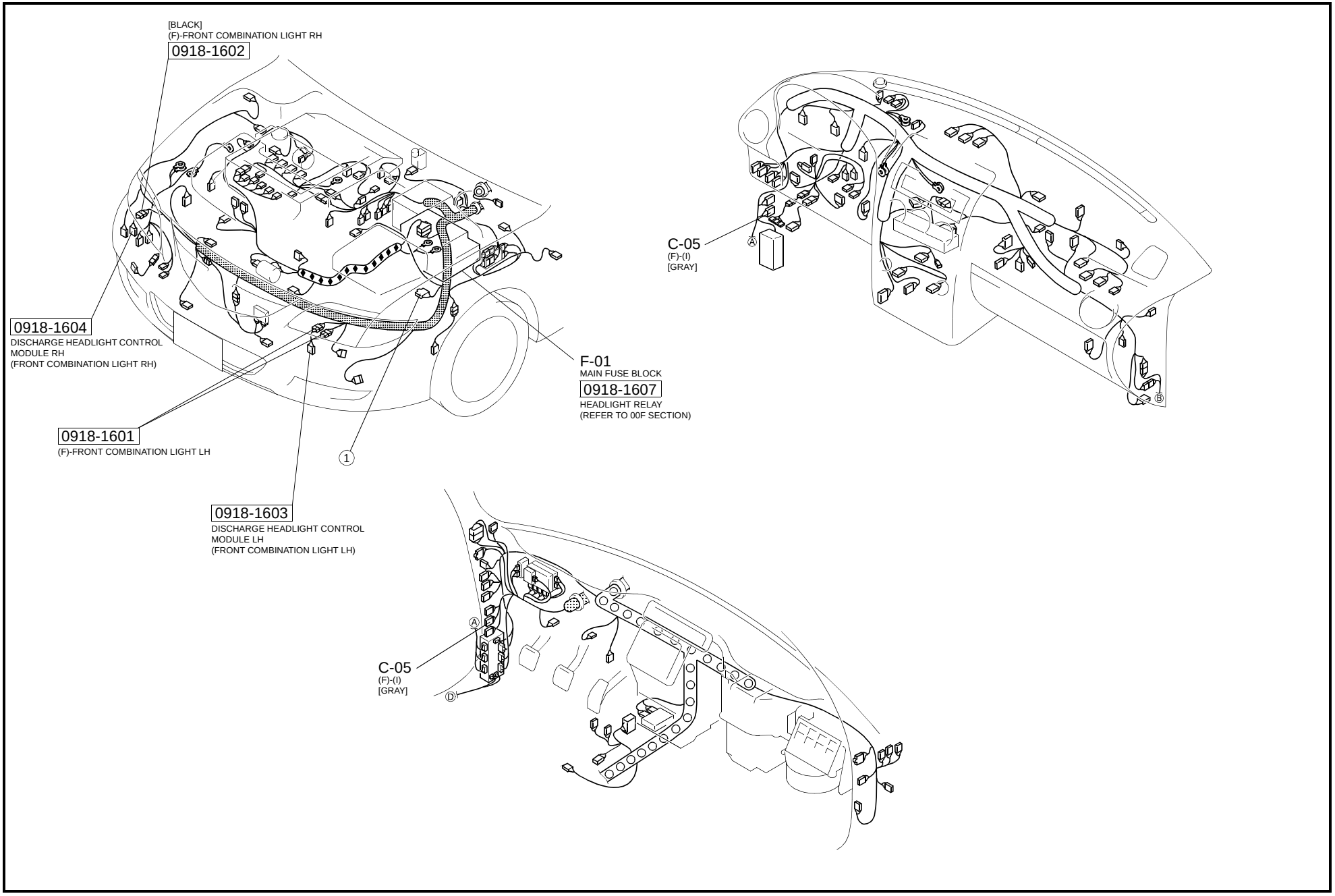

https://www.MyCarManual.com

HEADLIGHT (WITH RUNNING LIGHT SYSTEM : L3 Turbo)

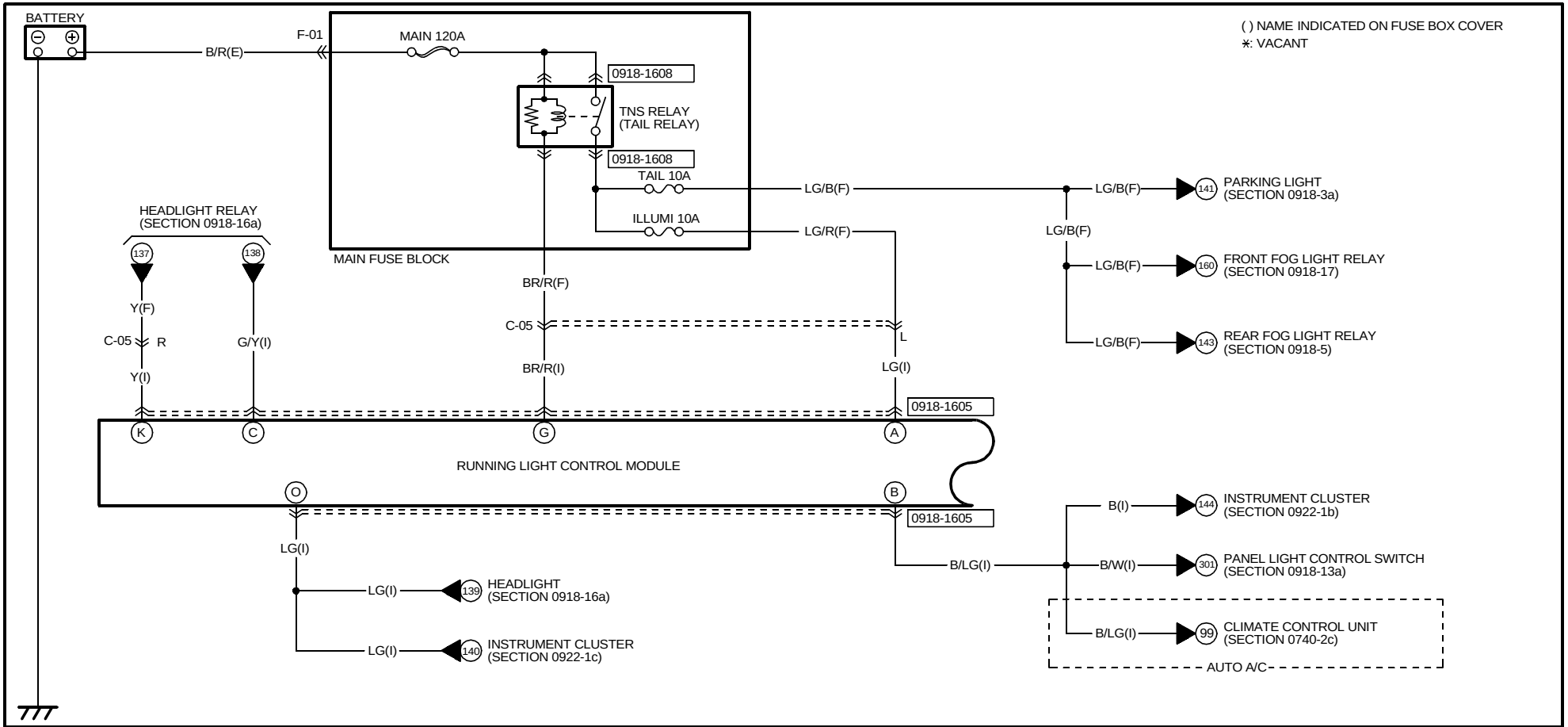

0918-1605

RUNNING LIGHT CONTROL MODULE(I)

O LG	M O/B	K Y	I BR/B	G BR/R	E G/B	C G/Y	A LG
P LG/B	N *	L *	J *	H L/Y	F L/R	D B/R	B B/LG

0918-1608

TNS RELAY(F)

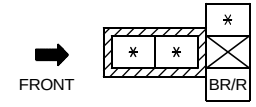

NOTE:SEEN FROM TERMINAL SIDE

https://www.MyCarManual.com

HARNESS SYMBOL : (F) (E) (D) (R)

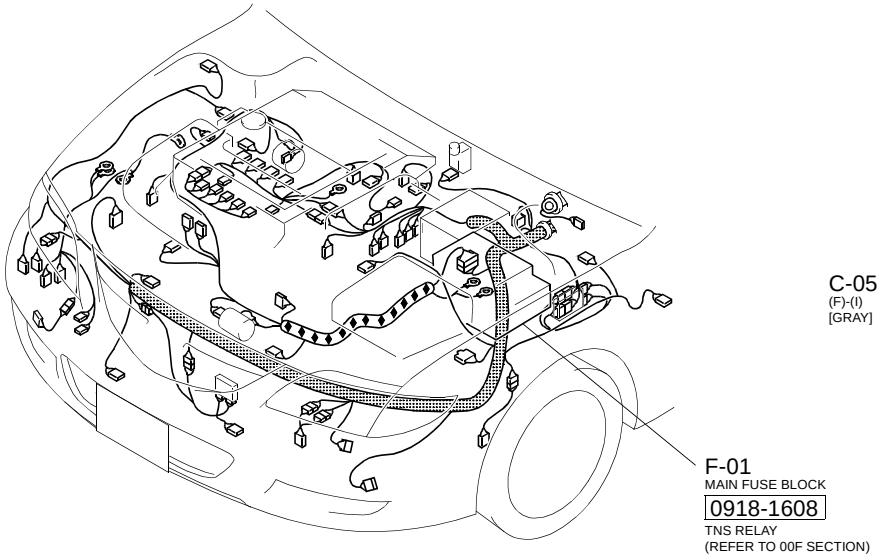

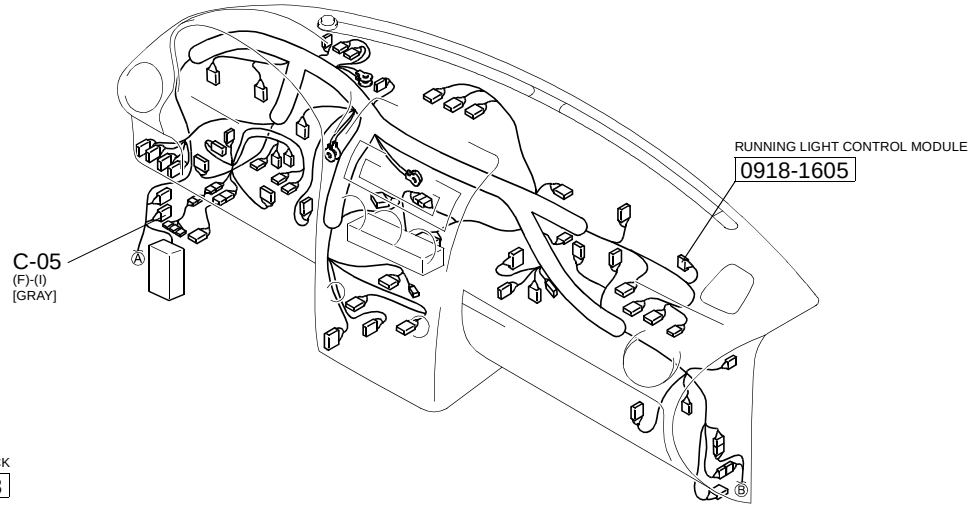

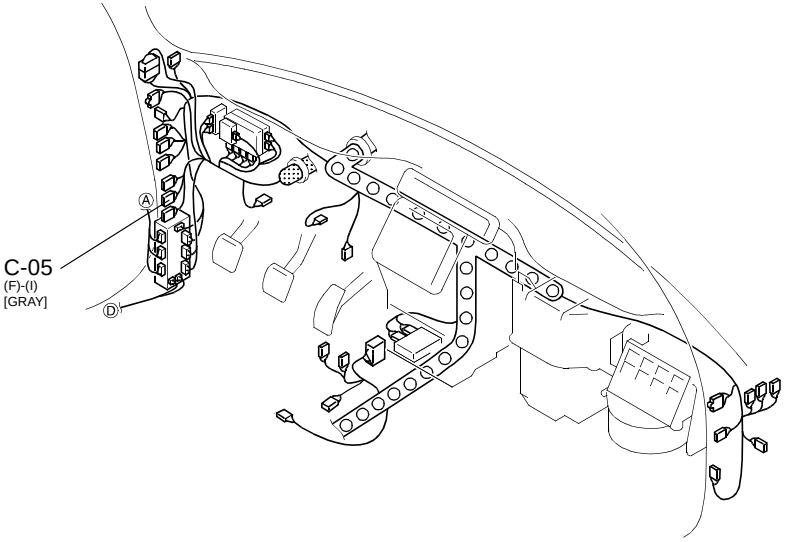

https://www.MyCarManual.com

HEADLIGHT (WITH RUNNING LIGHT SYSTEM : L3 Turbo)

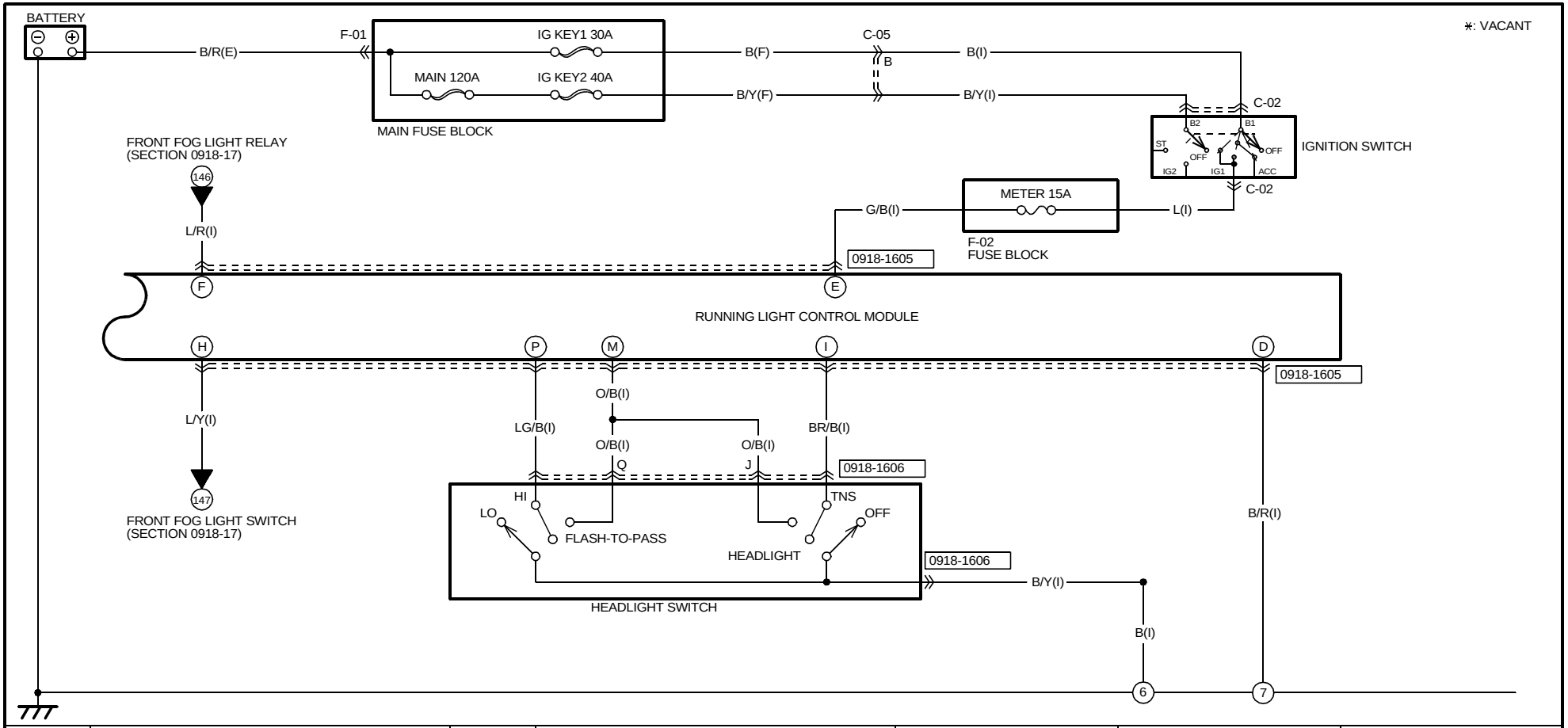

0918-1605

RUNNING LIGHT CONTROL MODULE(I)

O LG	M O/B	K Y	I BR/B	G BR/R	E G/B	C G/Y	A LG
P LG/B	N ∗	L ∗	J ∗	H L/Y	F L/R	D B/R	B B/LG

0918-1606

HEADLIGHT SWITCH(I)

Q

O/B	LG/B	∗	∗	∗		W/R	B/R	W/B
∗	B/Y	∗	BR/B	O/B	∗	GY	L/Y	∗

J

https://www.MyCarManual.com

HARNESS SYMBOL : (F) (E) (D) (R)

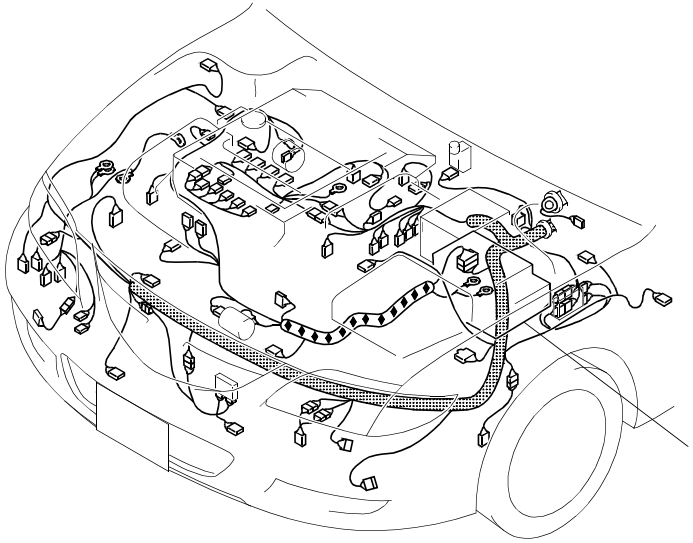

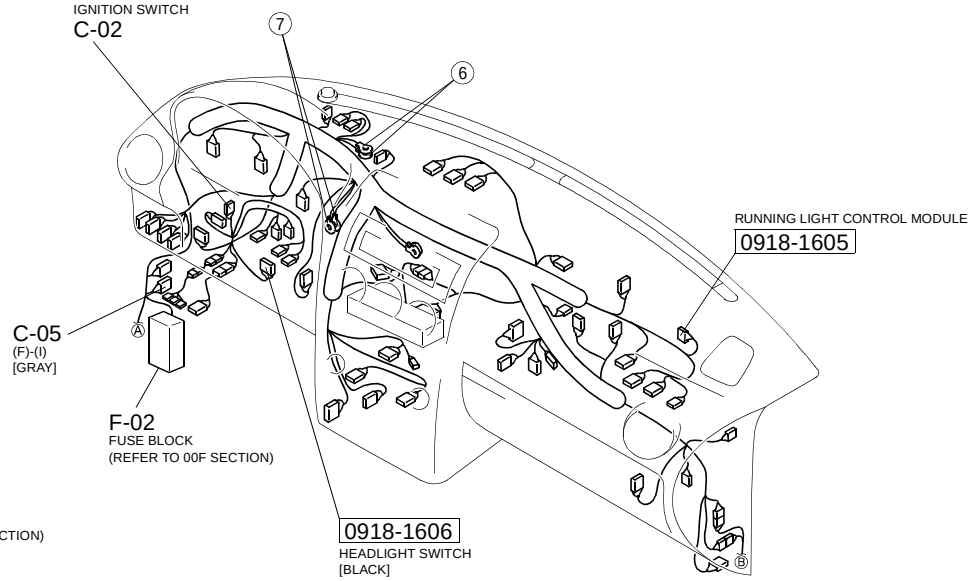

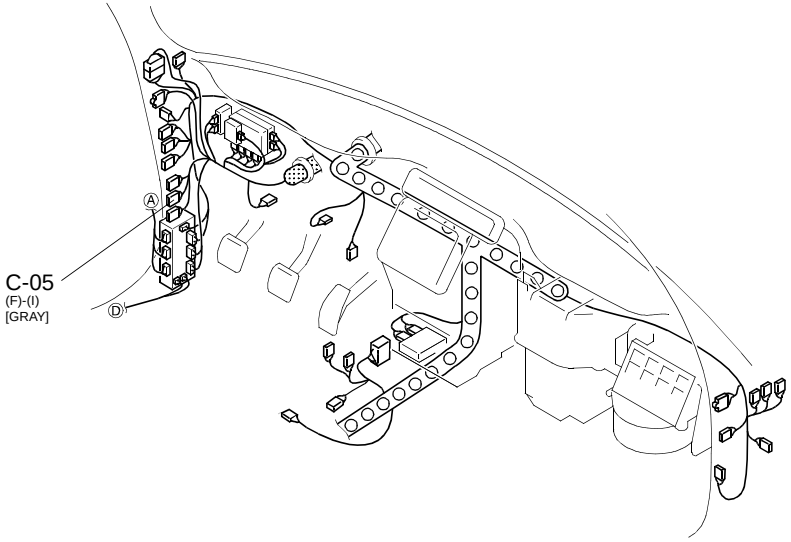

https://www.MyCarManual.com

FRONT FOG LIGHT (L3 Turbo)

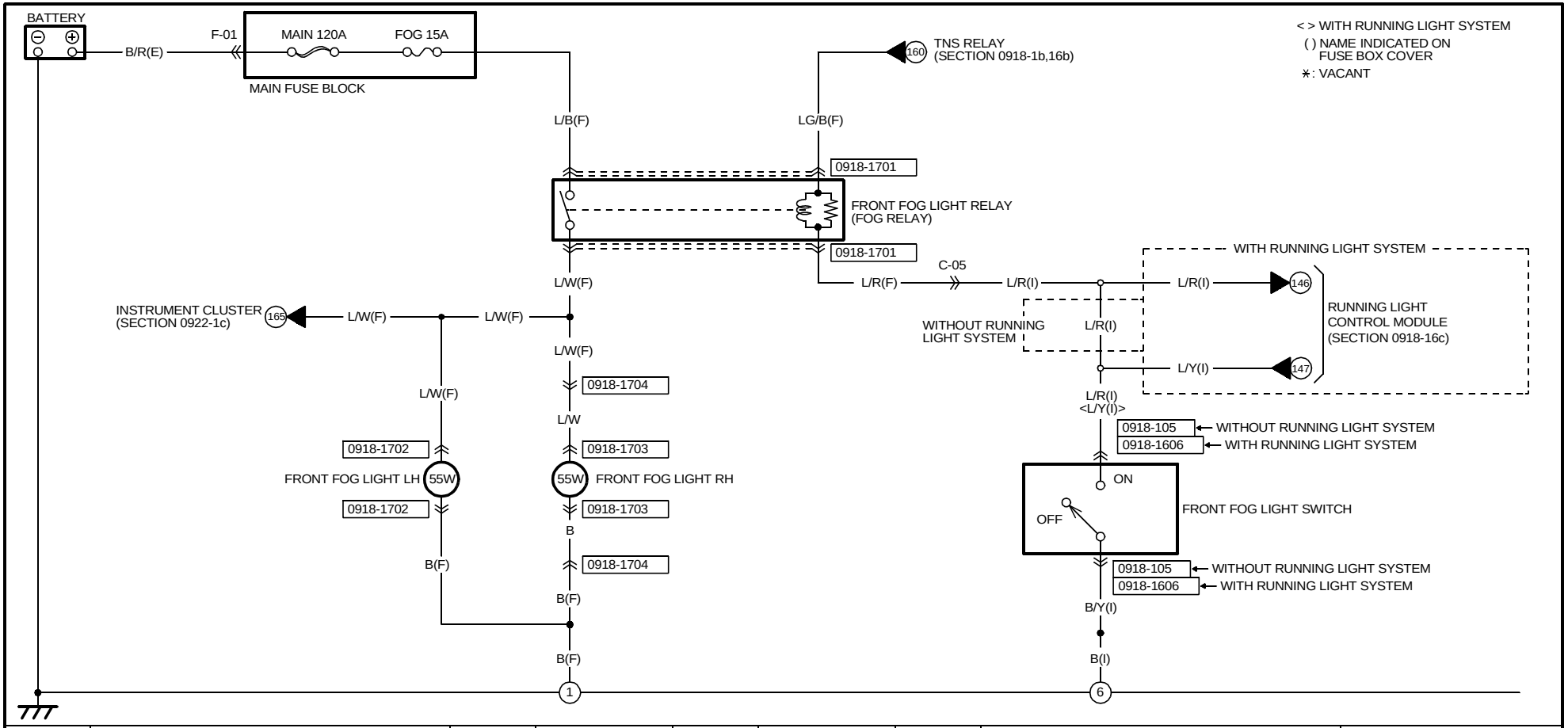

0918-1701	0918-1702	0918-1703	0918-1704
FRONT FOG LIGHT RELAY(F)	FRONT FOG LIGHT LH(F)	FRONT FOG LIGHT RH (SHORT CORD)	FRONT(F)-SHORT CORD

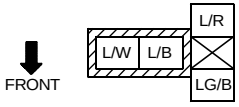

NOTE:SEEN FROM TERMINAL SIDE

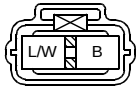

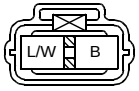

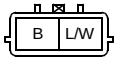

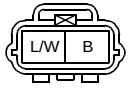

0918-105 ← WITHOUT RUNNING LIGHT SYSTEM
0918-1606 ← WITH RUNNING LIGHT SYSTEM
FRONT FOG LIGHT SWITCH(I)

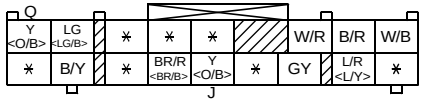

https://www.MyCarManual.com

HARNESS SYMBOL : (F) (E) (D) (R)

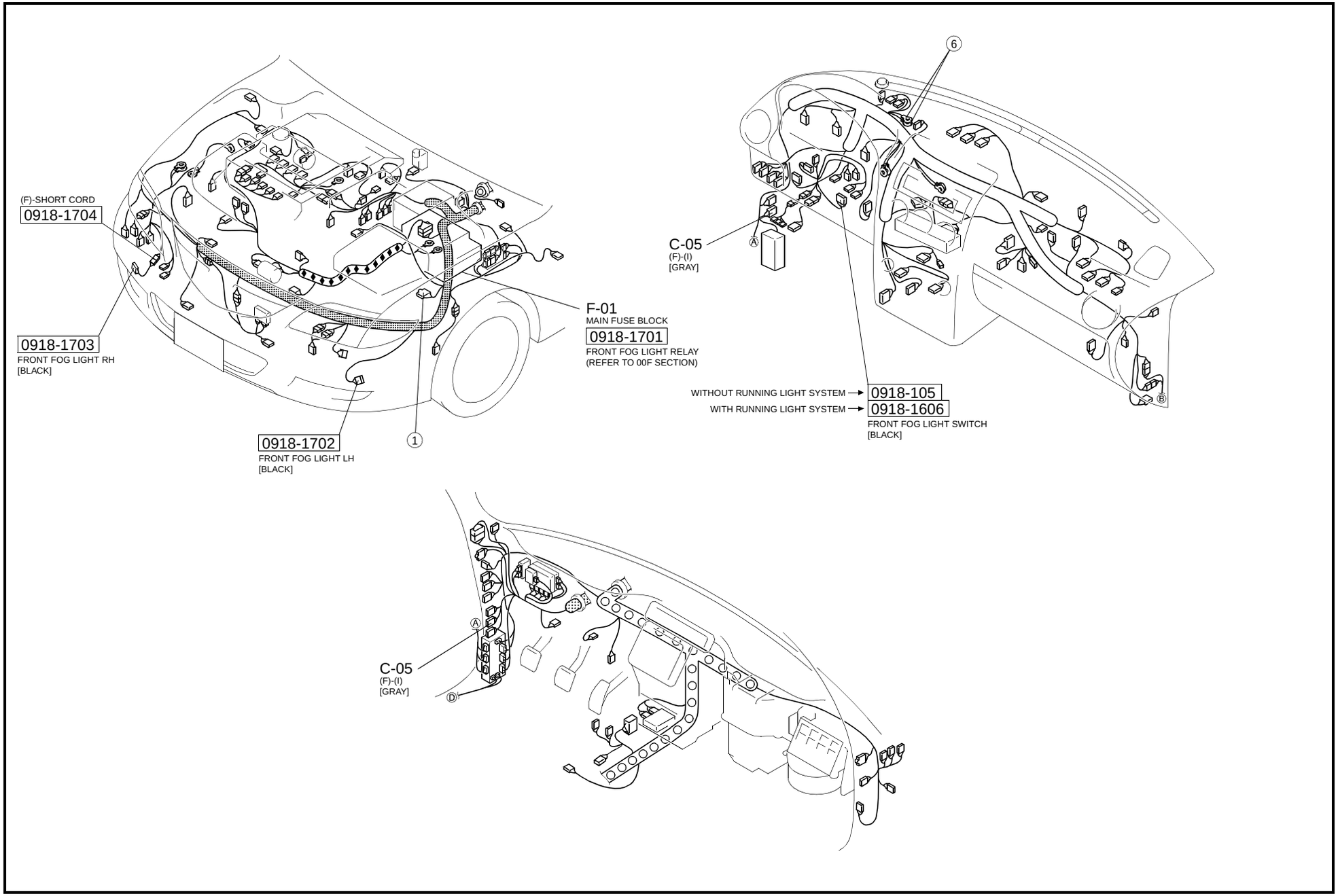

WINDSHIELD WIPER AND WASHER (WITHOUT AUTO WIPER)

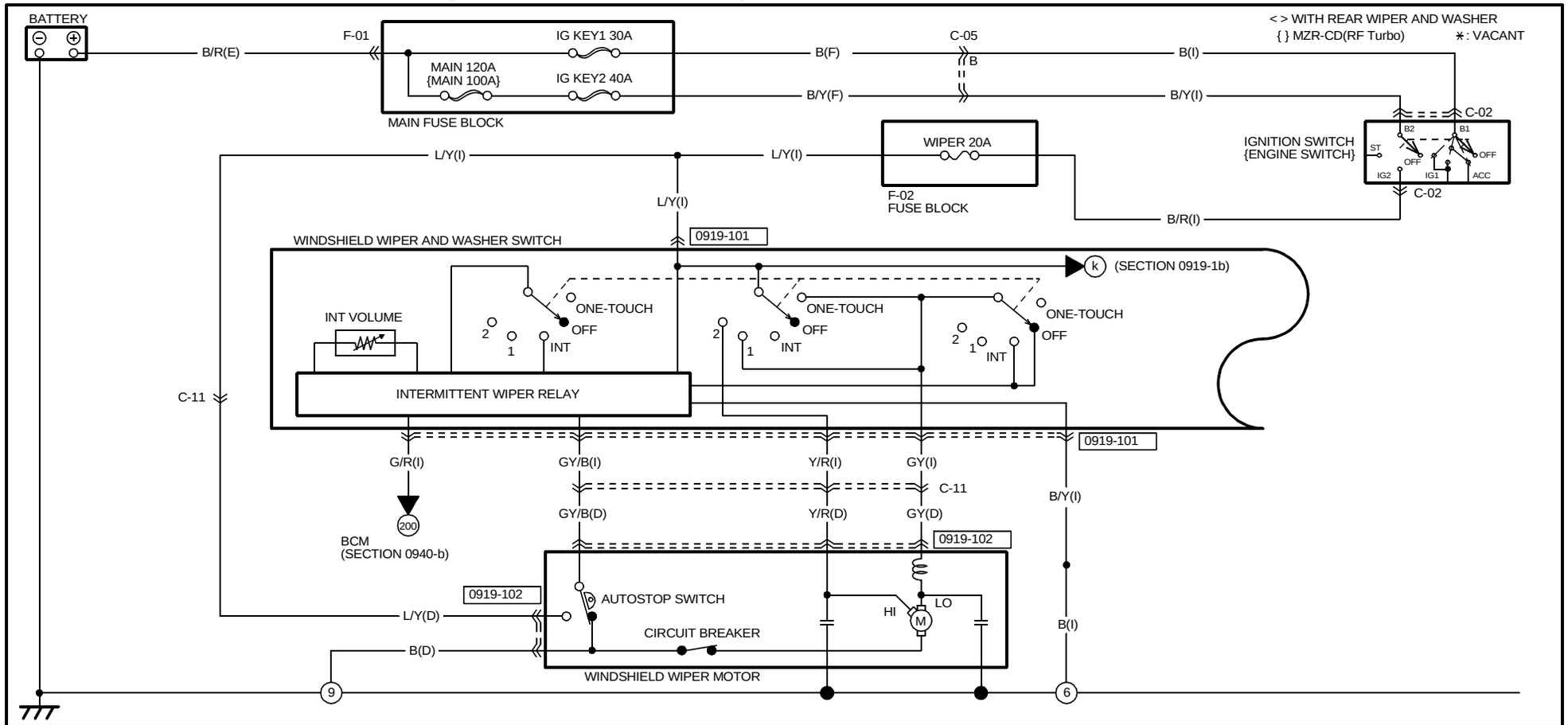

0919-101

WINDSHIELD WIPER AND WASHER SWITCH(I)

Y/R	B/Y	GY			L/Y	GY/B	O/L
∗	G/R	∗ <L/R>	∗ <P/L>	∗ <L/B>	∗ <B>	∗	∗

0919-102

WINDSHIELD WIPER MOTOR(D)

Y/R	L/Y	GY/B
GY	B	

HARNESS SYMBOL : (F) (E) (D) (R)

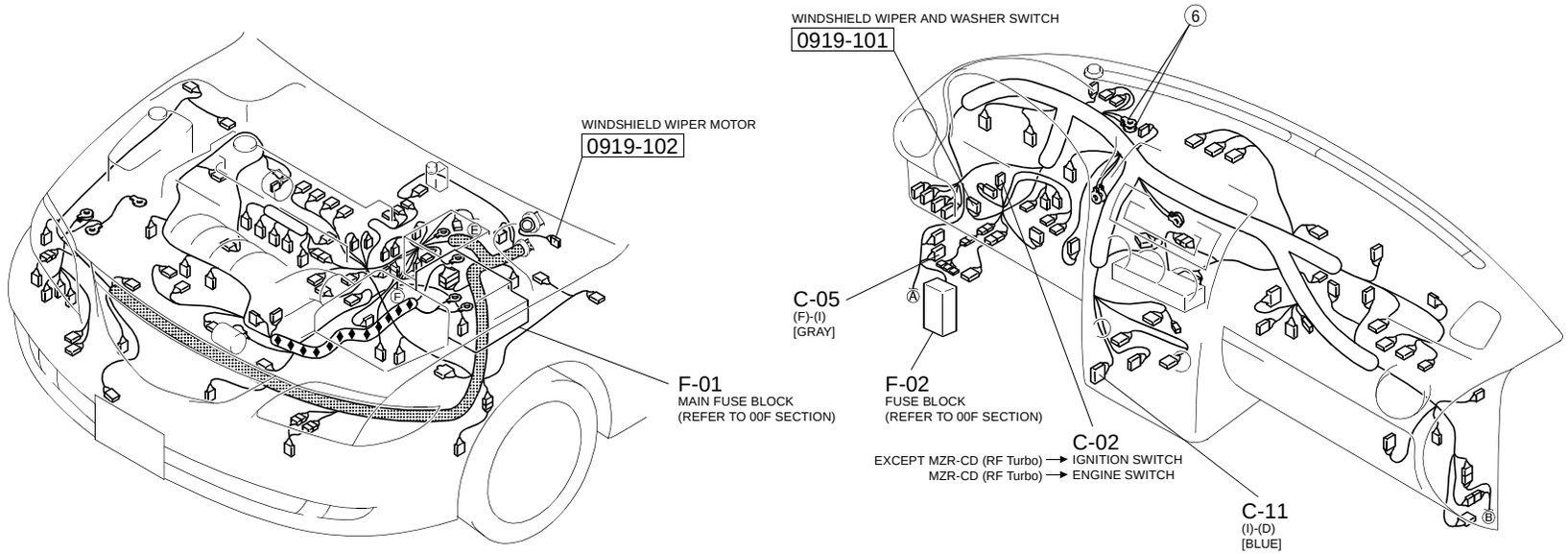

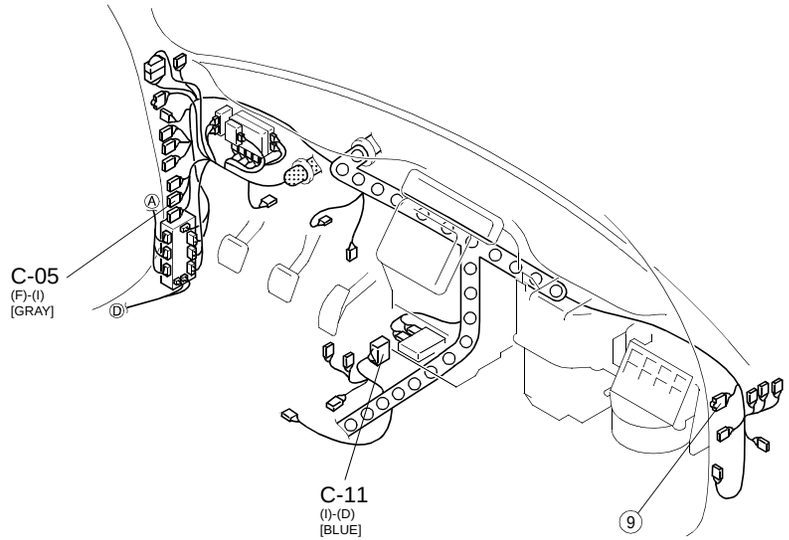

WINDSHIELD WIPER AND WASHER (WITHOUT AUTO WIPER)

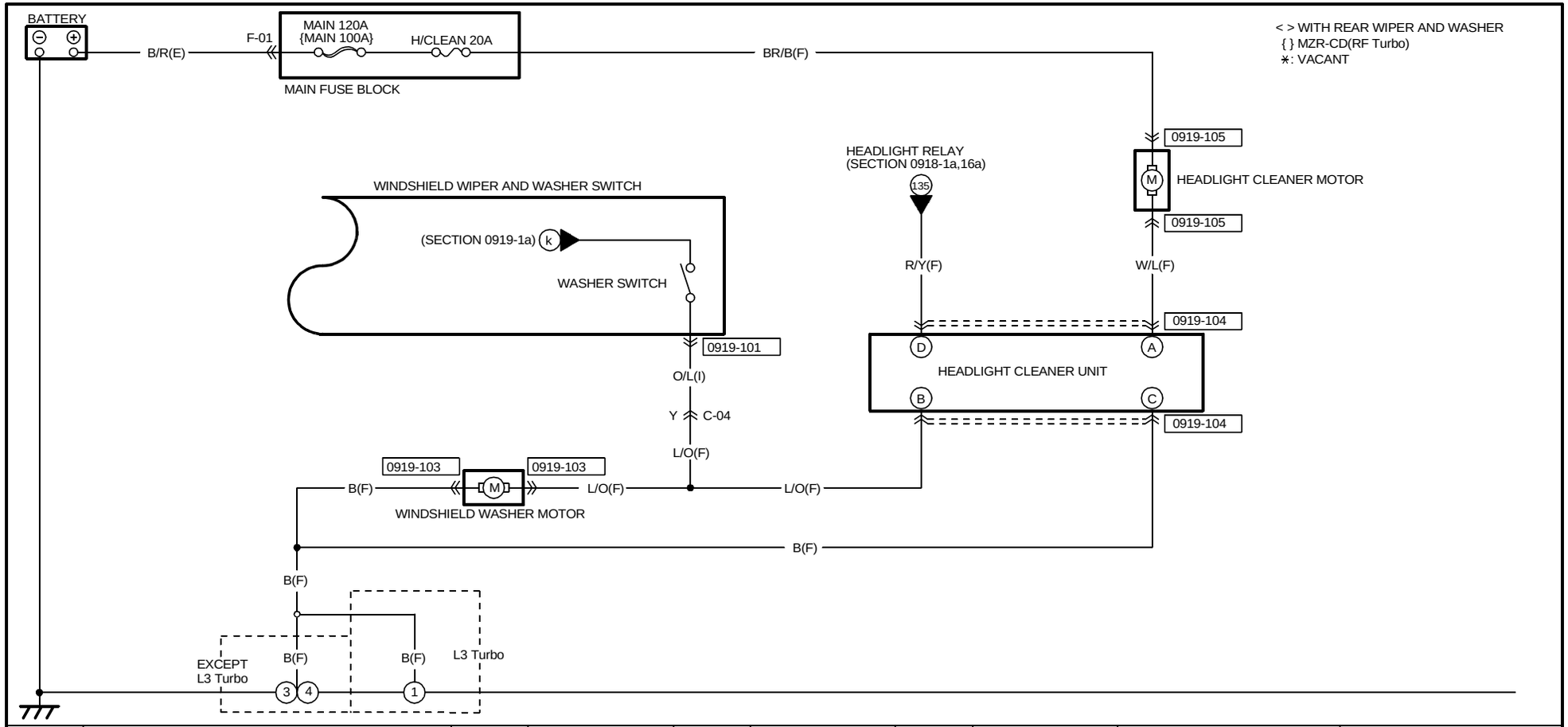

0919-101	0919-103	0919-104	0919-105
WINDSHIELD WIPER AND WASHER SWITCH(I)	WINDSHIELD WASHER MOTOR (F)	HEADLIGHT CLEANER UNIT(F)	HEADLIGHT CLEANER MOTOR (F)
Y/R, B/Y, GY, L/Y, GY/B, O/L; * G/R * <L/R> * <P/L> * <L/B> * <B> * *	B, L/O	A C; W/L B; L/O R/Y; B D	BR/W W/L; B BR/B

HARNESS SYMBOL : (F) (E) (D) (R)

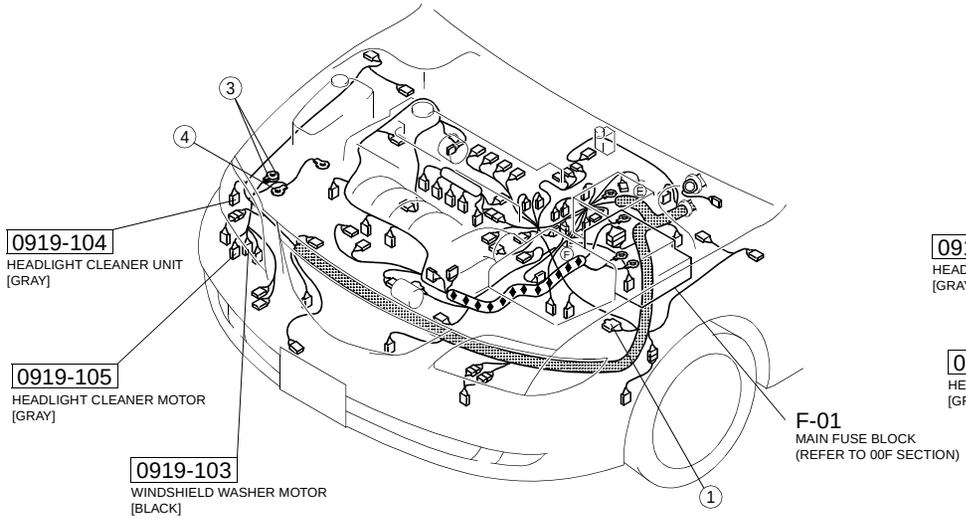

[EXCEPT MZR-CD (RF Turbo)]

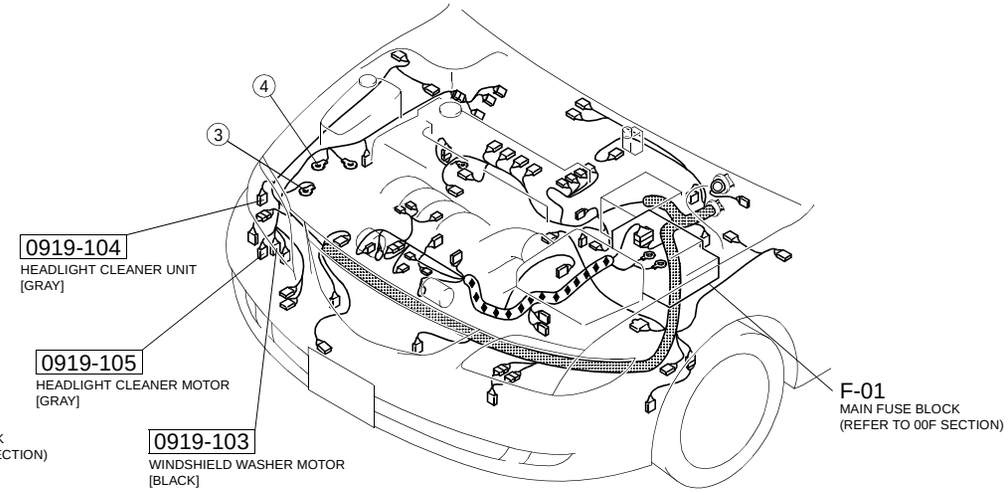

[MZR-CD (RF Turbo)]

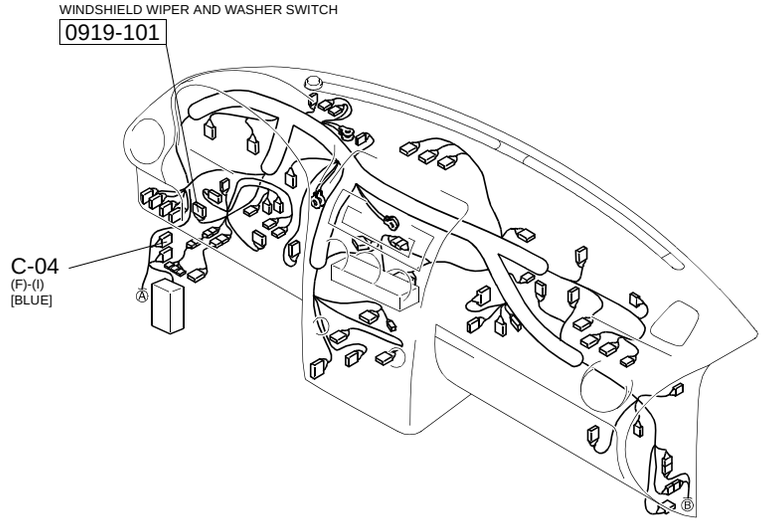

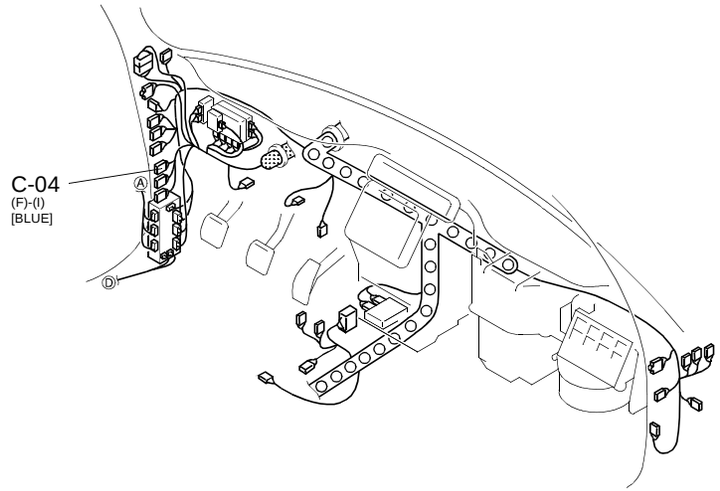

WINDSHIELD WIPER AND WASHER (WITH AUTO WIPER)

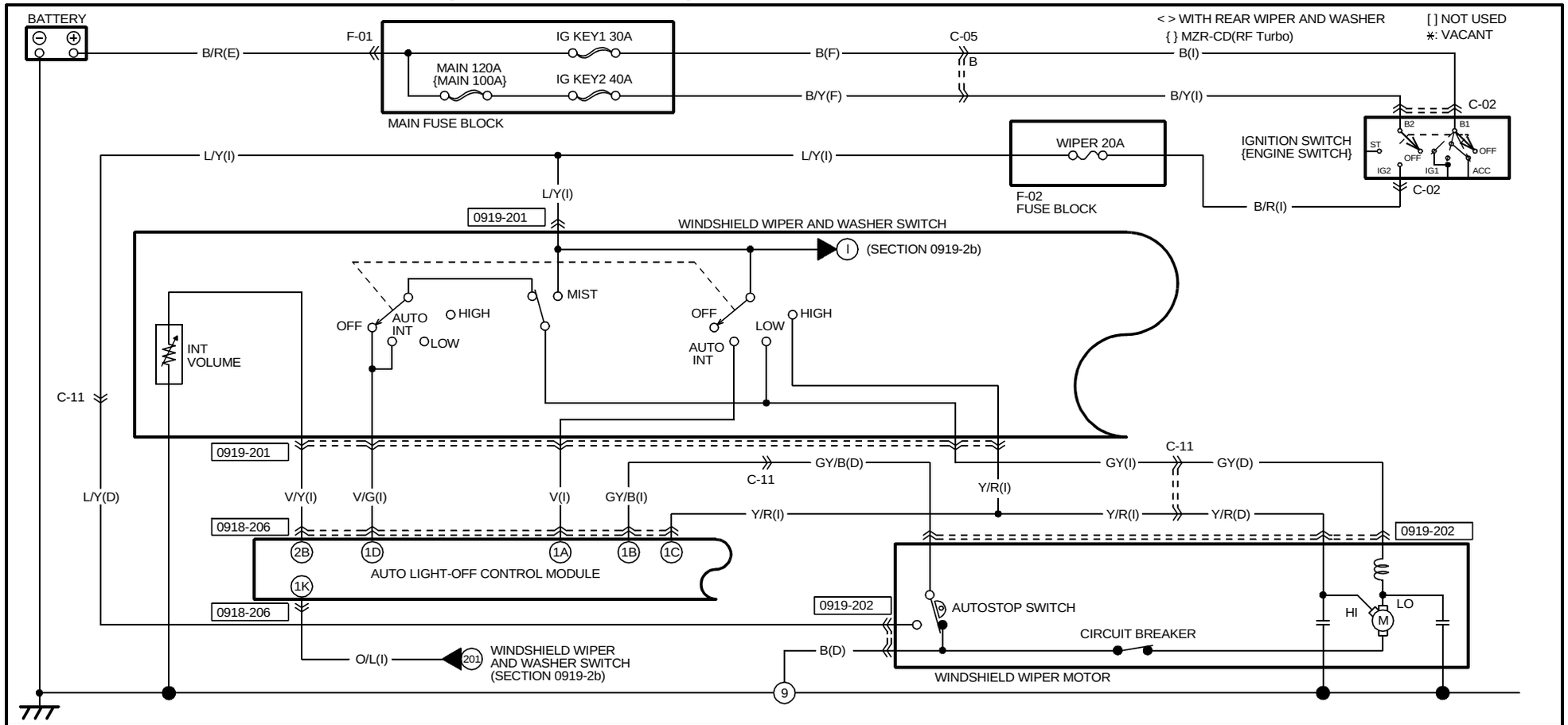

0919-201
WINDSHIELD WIPER AND WASHER SWITCH(I)

Y/R	[B/Y]	GY		L/Y	V/G	O/L
V	[G/R]	⁎ <L/R>	⁎ <P/L>	⁎ <L/B>	⁎ <B>	V/Y	⁎

0919-202
WINDSHIELD WIPER MOTOR(D)

Y/R	L/Y	GY/B
GY	B	

0918-206
AUTO LIGHT-OFF CONTROL MODULE(I)

1K O/L	1I LG	1G B/R	1E LG	1C Y/R	1A V
1L L/Y	1J LG/B	1H G/Y	1F B/LG	1D V/G	1B GY/B

2O L/W	2M BR/B	2K Y	2I L/R	2G BR/R	2E V/W	2C G/B	2A G/R
2P GY	2N O/B	2L P/L	2J L/Y	2H V/R	2F LG	2D L/O	2B V/Y

HARNESS SYMBOL : (F) (E) (D) (R)

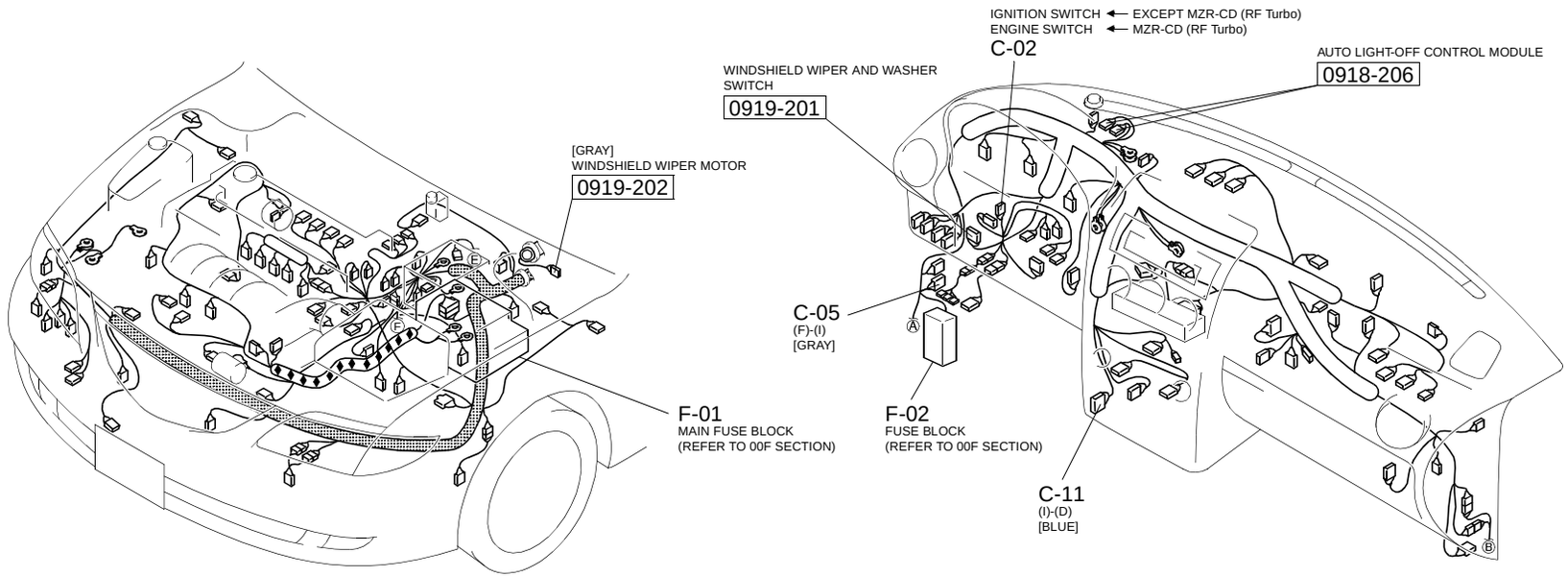

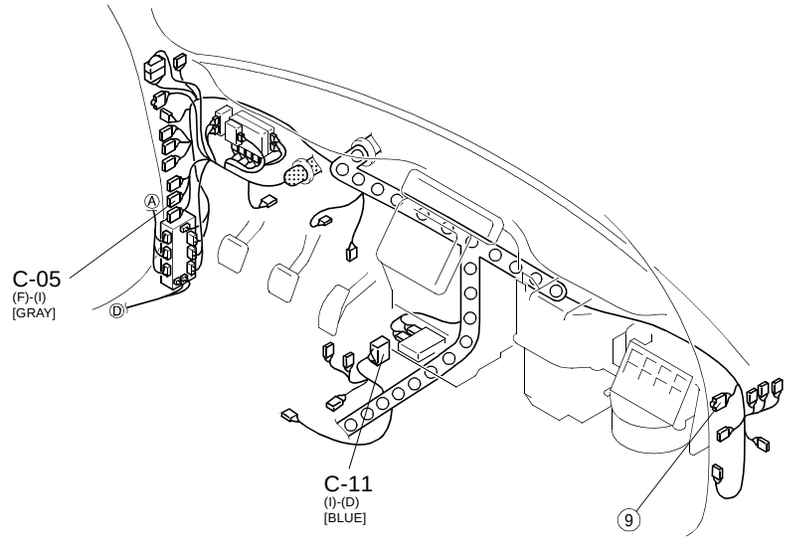

WINDSHIELD WIPER AND WASHER (WITH AUTO WIPER)

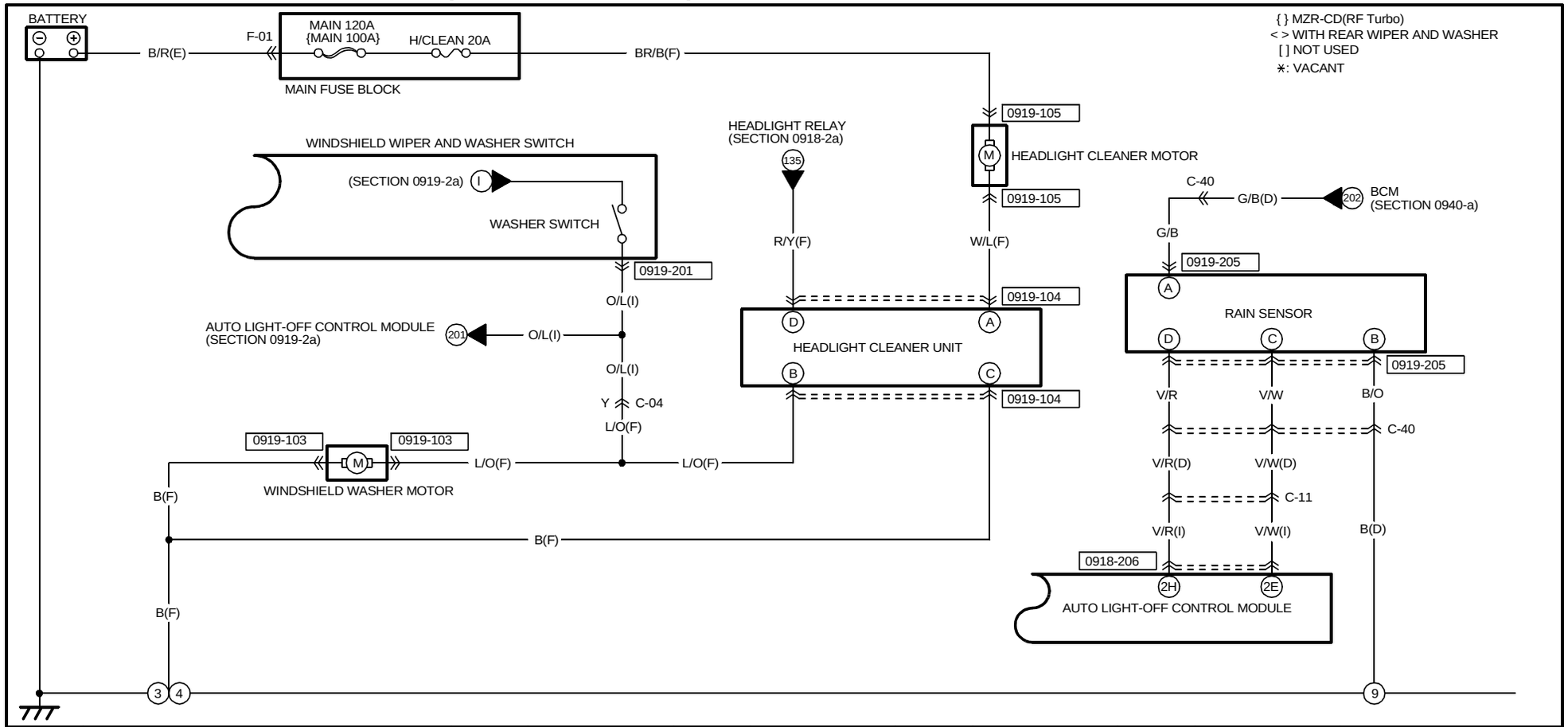

0919-201
WINDSHIELD WIPER AND WASHER SWITCH(I)

Y/R	[B/Y]	GY		L/Y	V/G	O/L
V	[G/R]	* <L/R>	* <P/L>	* <L/B>	* <B>	V/Y	*

0919-103
WINDSHIELD WASHER MOTOR (F)

B	L/O

0919-104
HEADLIGHT CLEANER UNIT(F)

A	C
W/L	B
L/O	R/Y
B	D

0919-105
HEADLIGHT CLEANER MOTOR (F)

BR/W	W/L
B	BR/B

0919-205
RAIN SENSOR(SHORT CORD)

G/B	A
B/O	B
V/W	C
V/R	D

0918-206
AUTO LIGHT-OFF CONTROL MODULE(I)

2O L/W	2M BR/B	2K Y	2I L/R	2G BR/R	2E V/W	2C G/B	2A G/R
2P GY	2N O/B	2L P/L	2J L/Y	2H V/R	2F LG	2D L/O	2B V/Y

HARNESS SYMBOL : (F) (E) (D) (R)

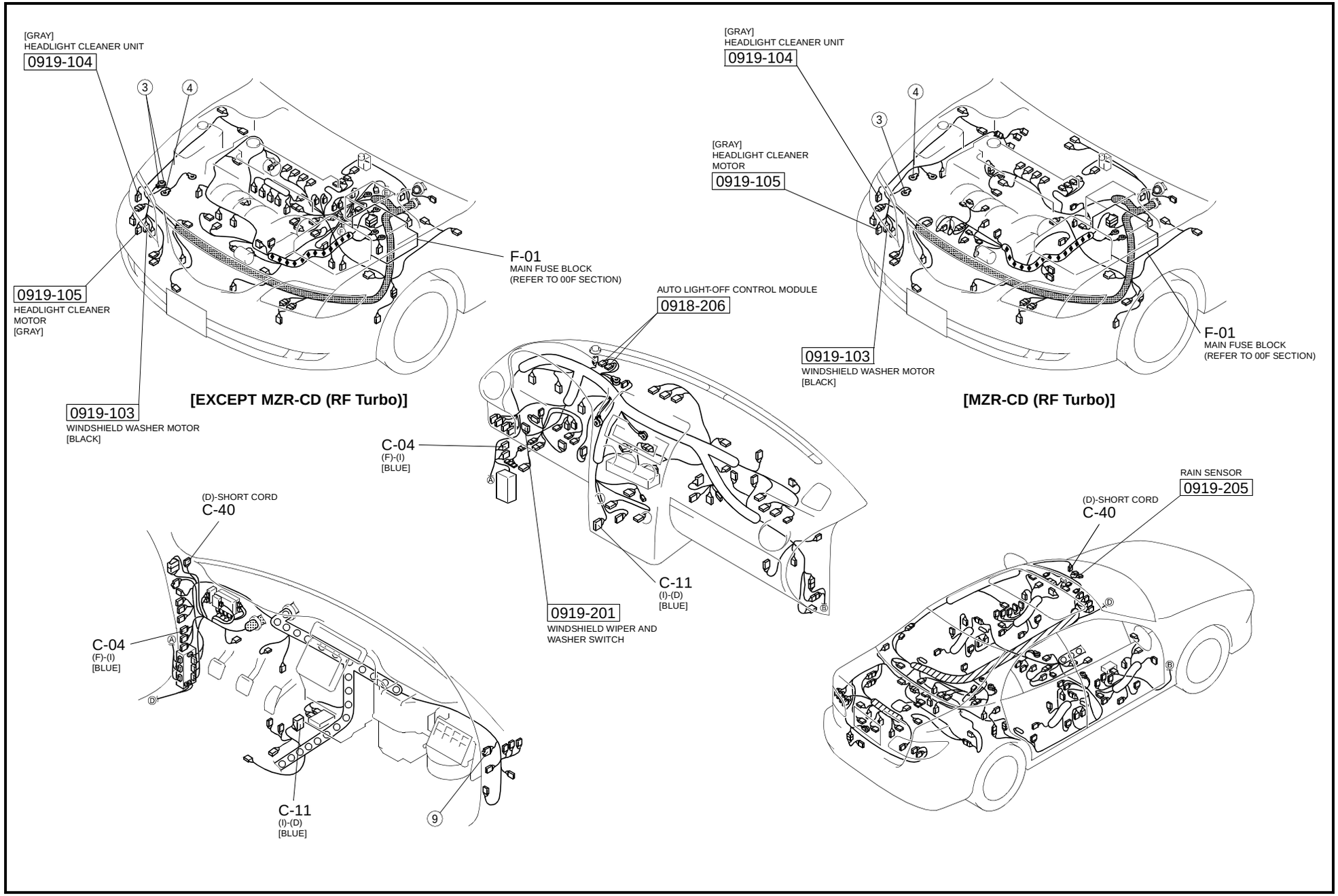

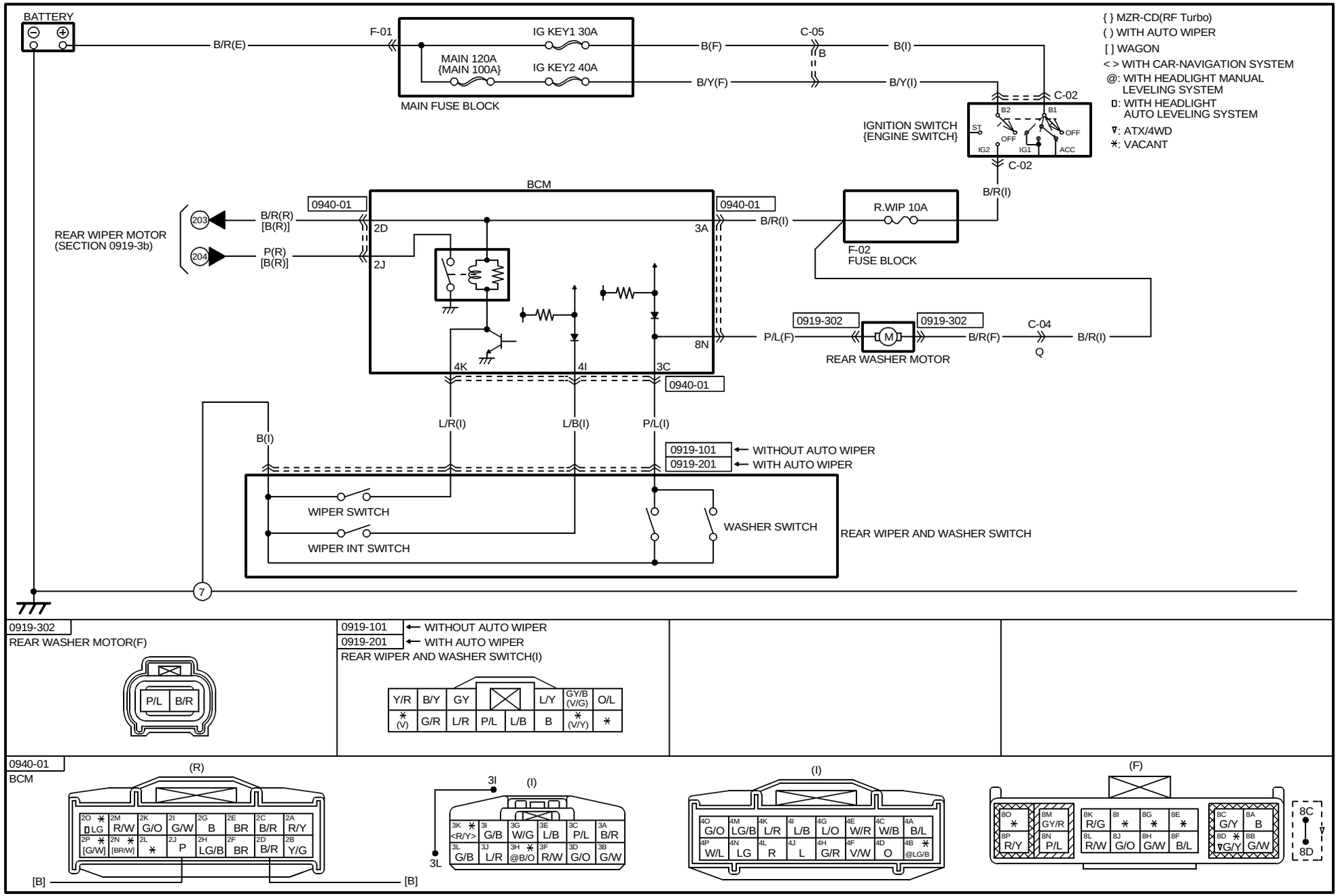

0919-302
REAR WASHER MOTOR(F)

0919-101 ← WITHOUT AUTO WIPER
0919-201 ← WITH AUTO WIPER
REAR WIPER AND WASHER SWITCH(I)

0940-01
BCM

HARNESS SYMBOL : (F) (E) (D) (R)

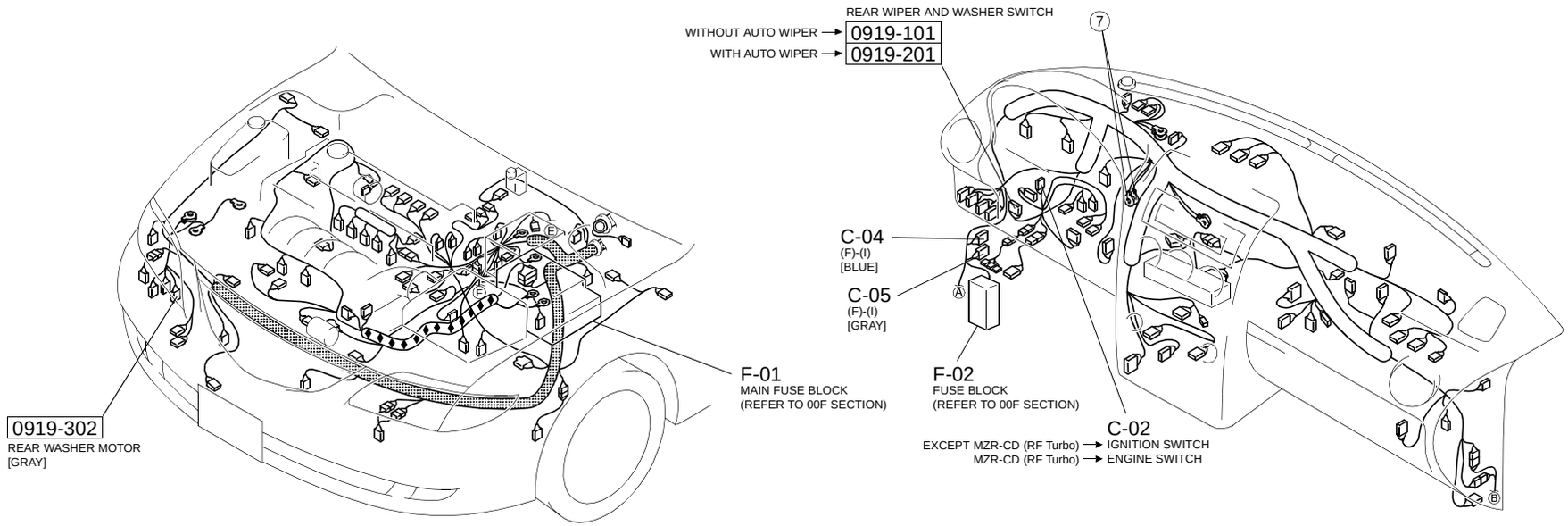

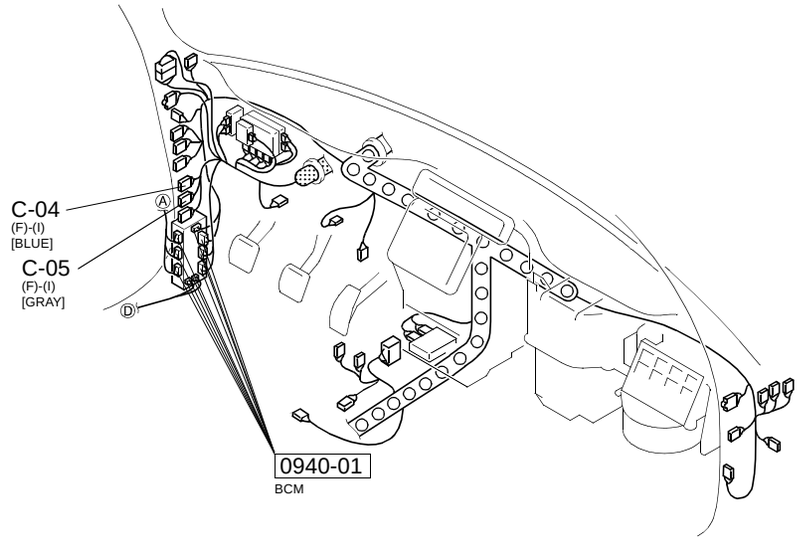

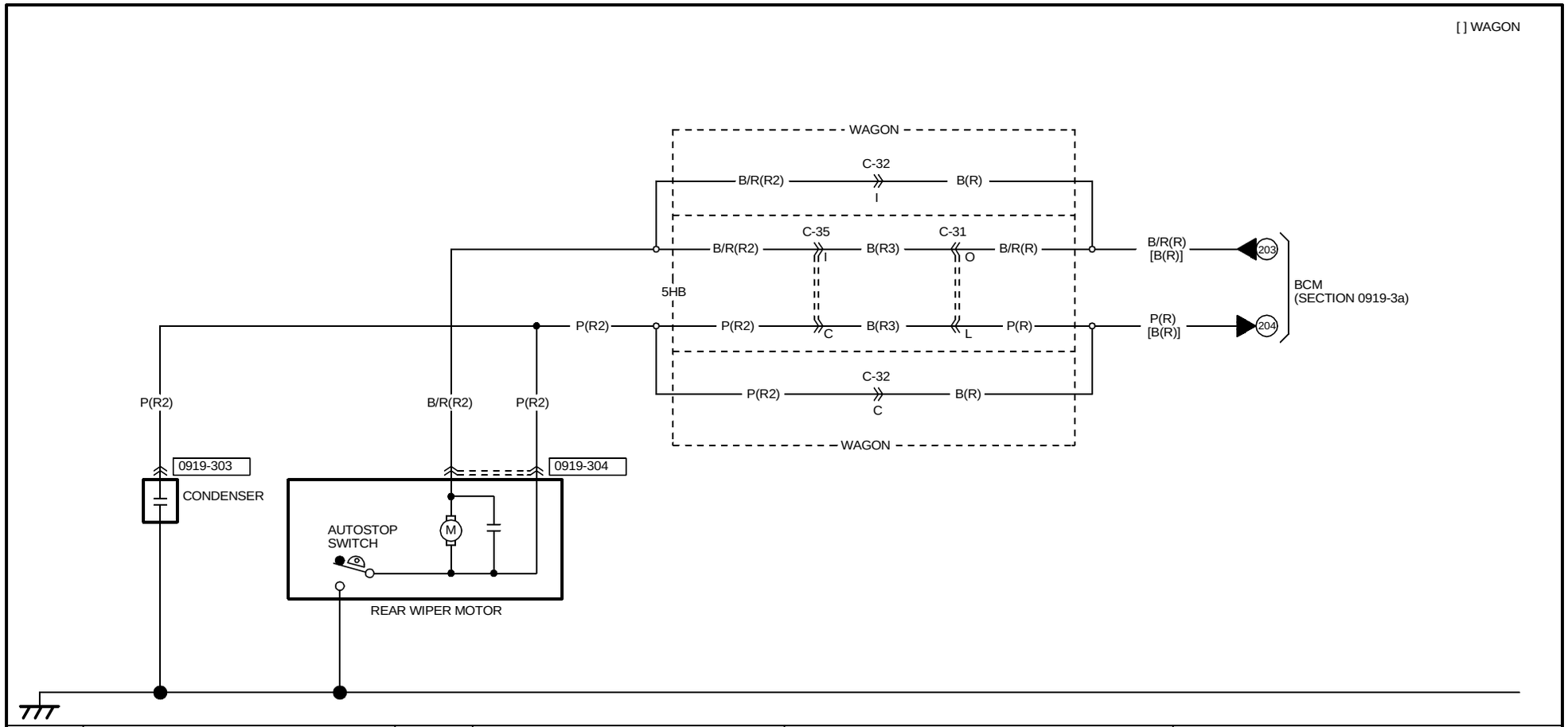

0919-303 CONDENSER(R2)	0919-304 REAR WIPER MOTOR(R2)		
P	P B/R		

HARNESS SYMBOL : (F) (E) (D) (R)

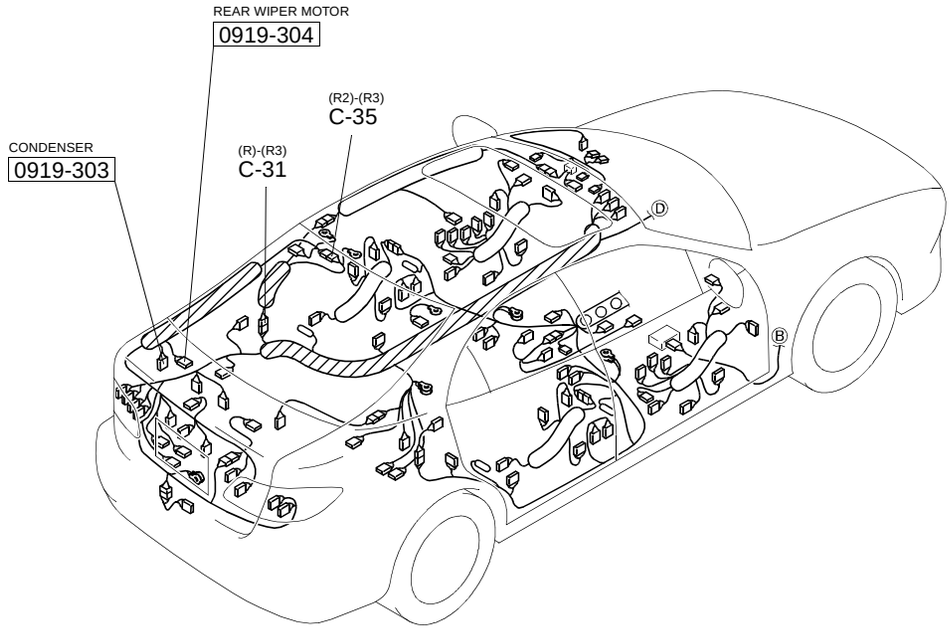

[5HB]

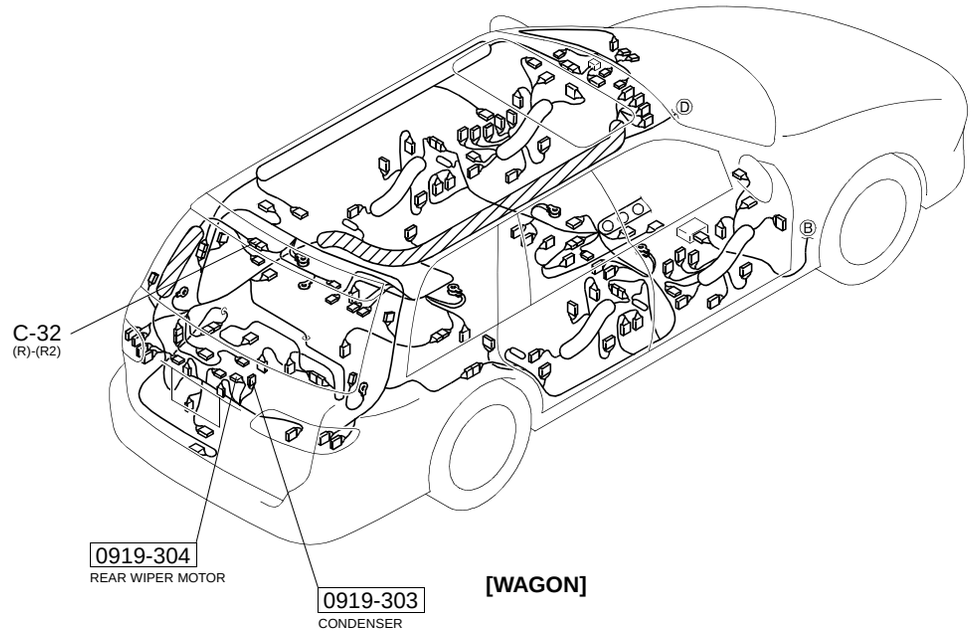

[WAGON]

CIGARETTE LIGHTER

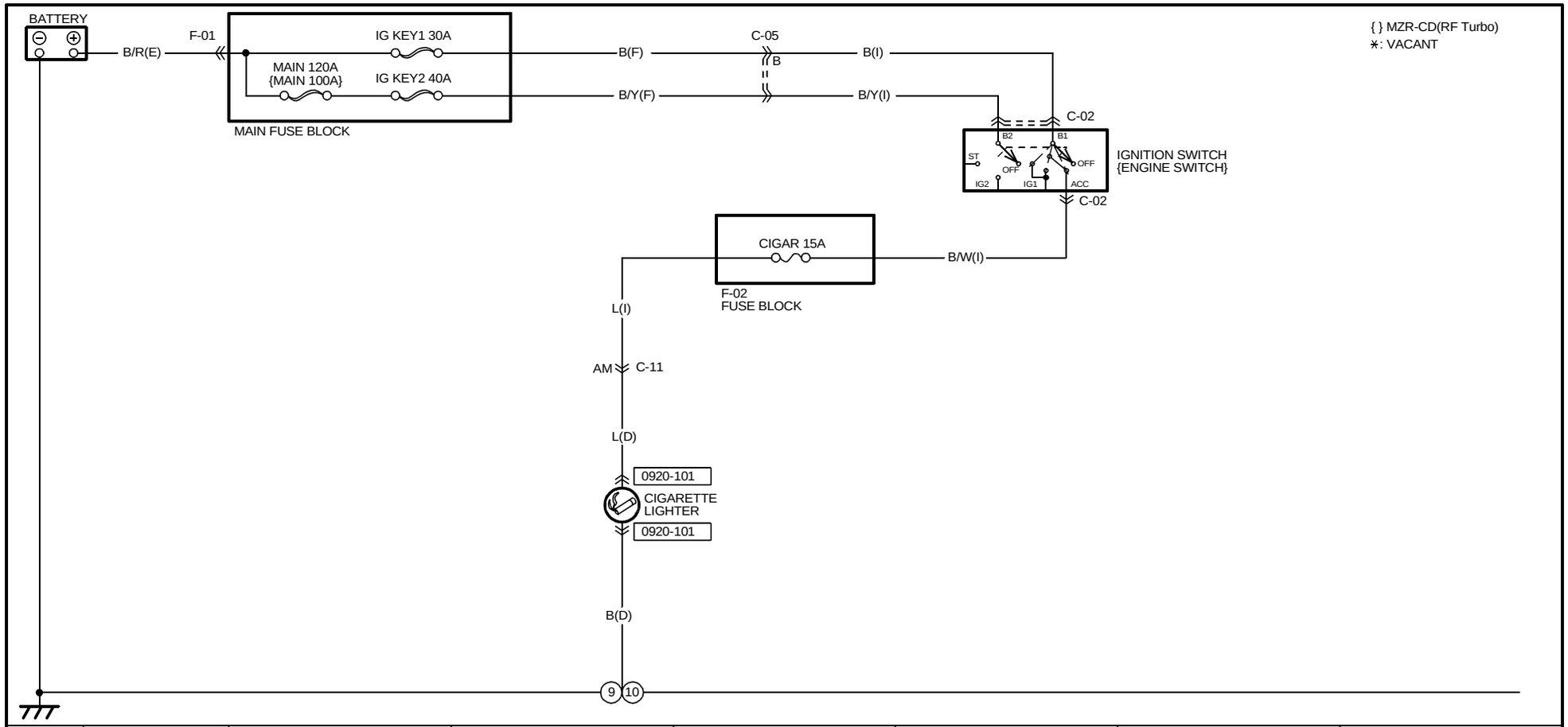

0920-101
CIGARETTE LIGHTER(D)

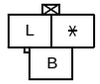

HARNESS SYMBOL : (F) (E) (D) (R)

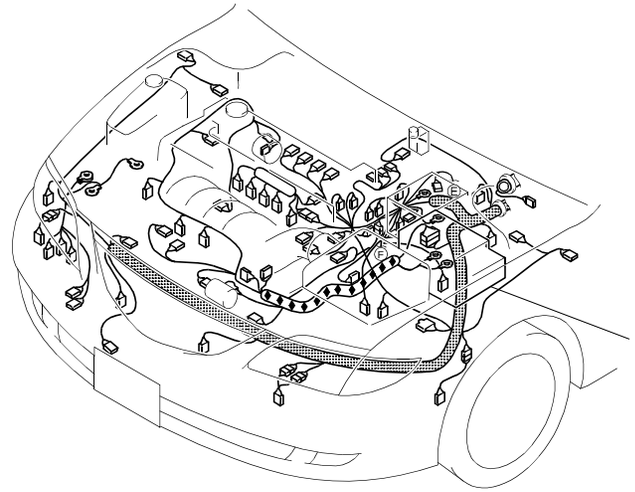

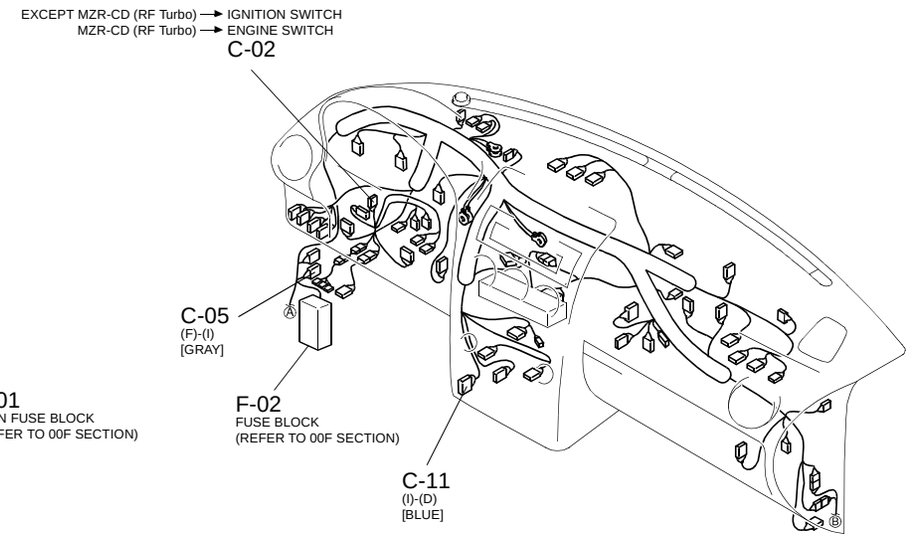

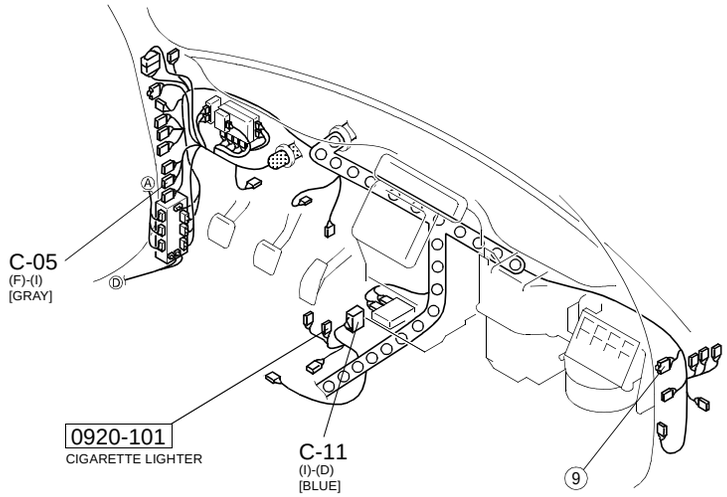

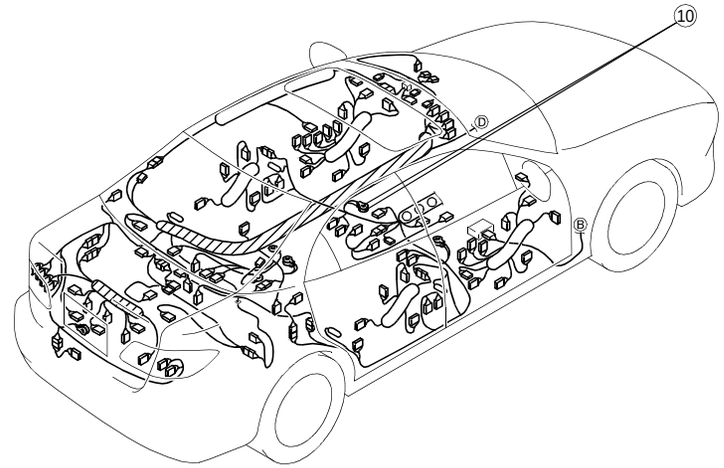

AUDIO SYSTEM (BOSE TYPE AUDIO/WITHOUT CAR-NAVIGATION SYSTEM)

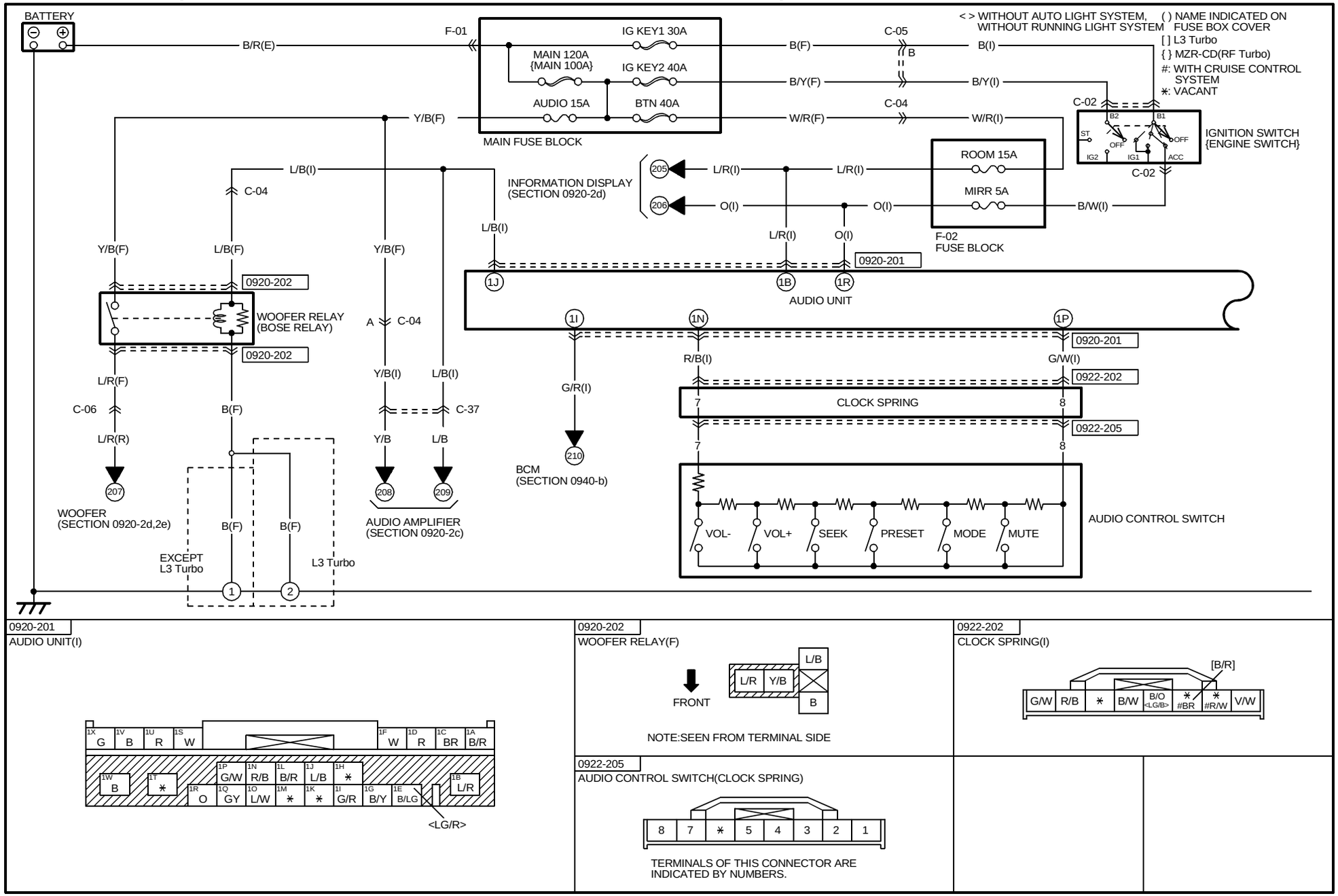

0920-201
AUDIO UNIT(I)

0920-202
WOOFER RELAY(F)

NOTE:SEEN FROM TERMINAL SIDE

0922-202
CLOCK SPRING(I)

0922-205
AUDIO CONTROL SWITCH(CLOCK SPRING)

TERMINALS OF THIS CONNECTOR ARE INDICATED BY NUMBERS.

HARNESS SYMBOL : (F) (E) (D) (R)

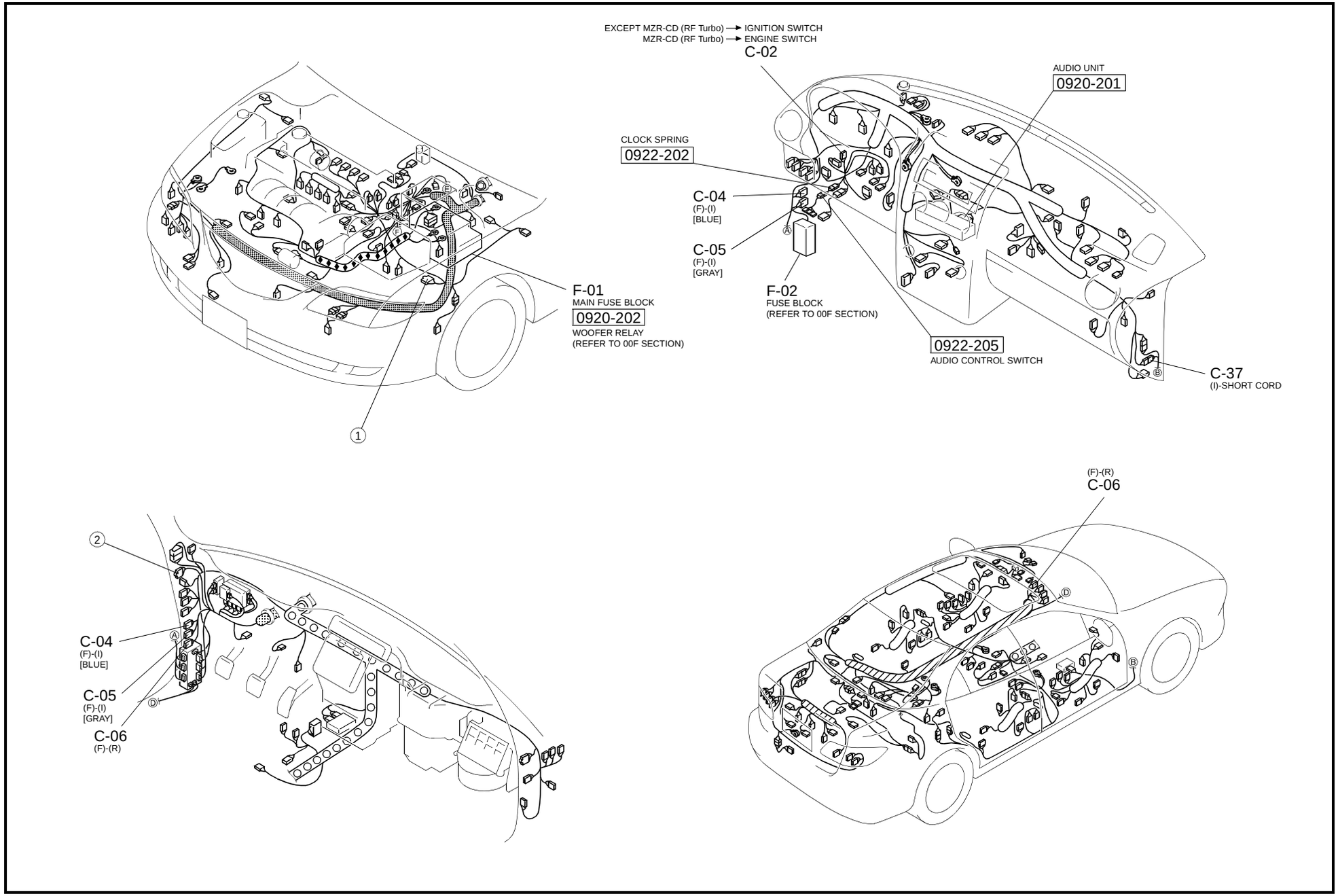

AUDIO SYSTEM (BOSE TYPE AUDIO/WITHOUT CAR-NAVIGATION SYSTEM)

< > WITHOUT AUTO LIGHT SYSTEM, WITHOUT RUNNING LIGHT SYSTEM

▯: WITH HEADLIGHT AUTO LEVELING SYSTEM

[ ] WAGON

✳: VACANT

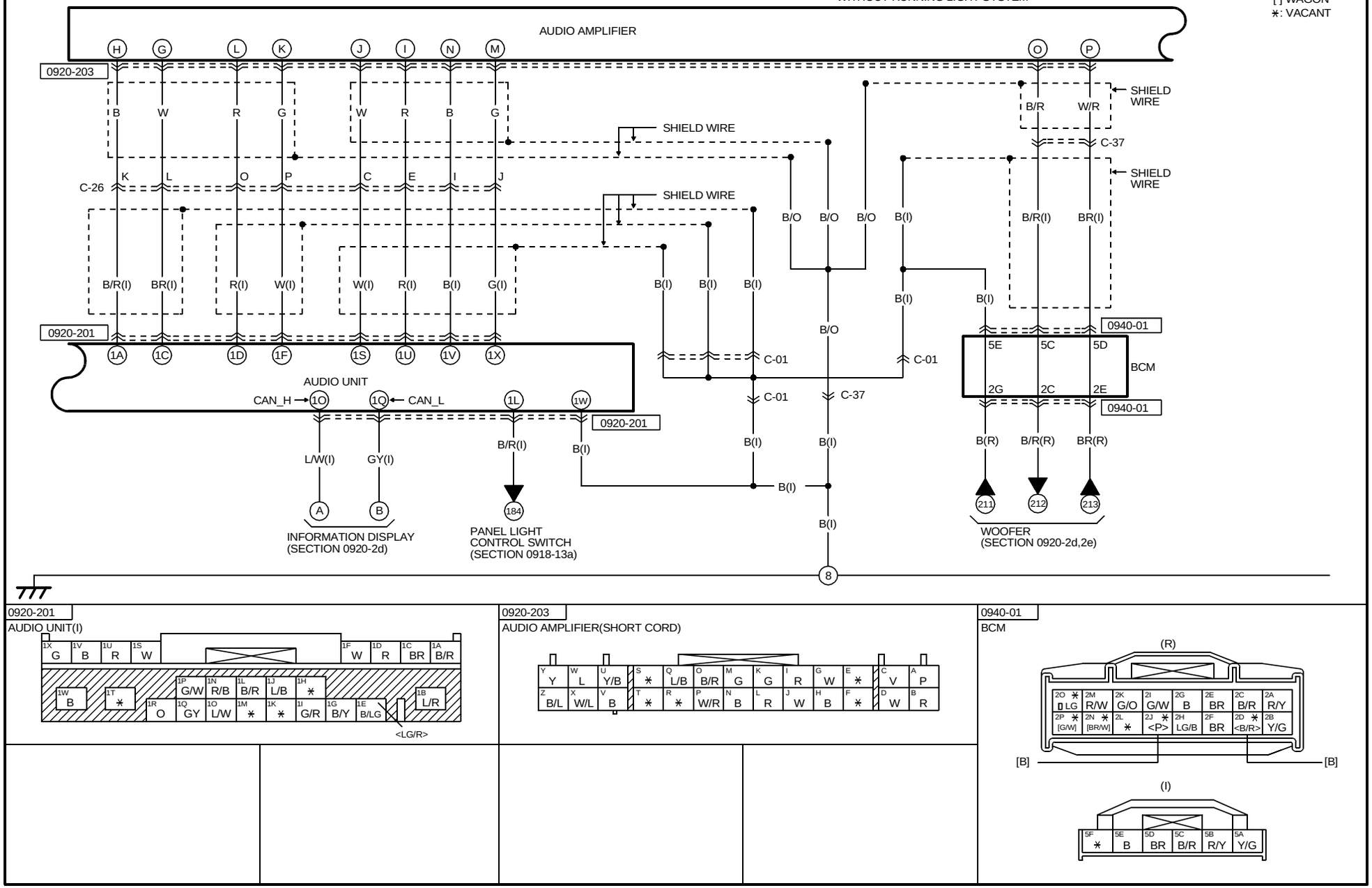

0920-201

AUDIO UNIT(I)

0920-203

AUDIO AMPLIFIER(SHORT CORD)

0940-01

BCM

HARNESS SYMBOL : (F) (E) (D) (R)

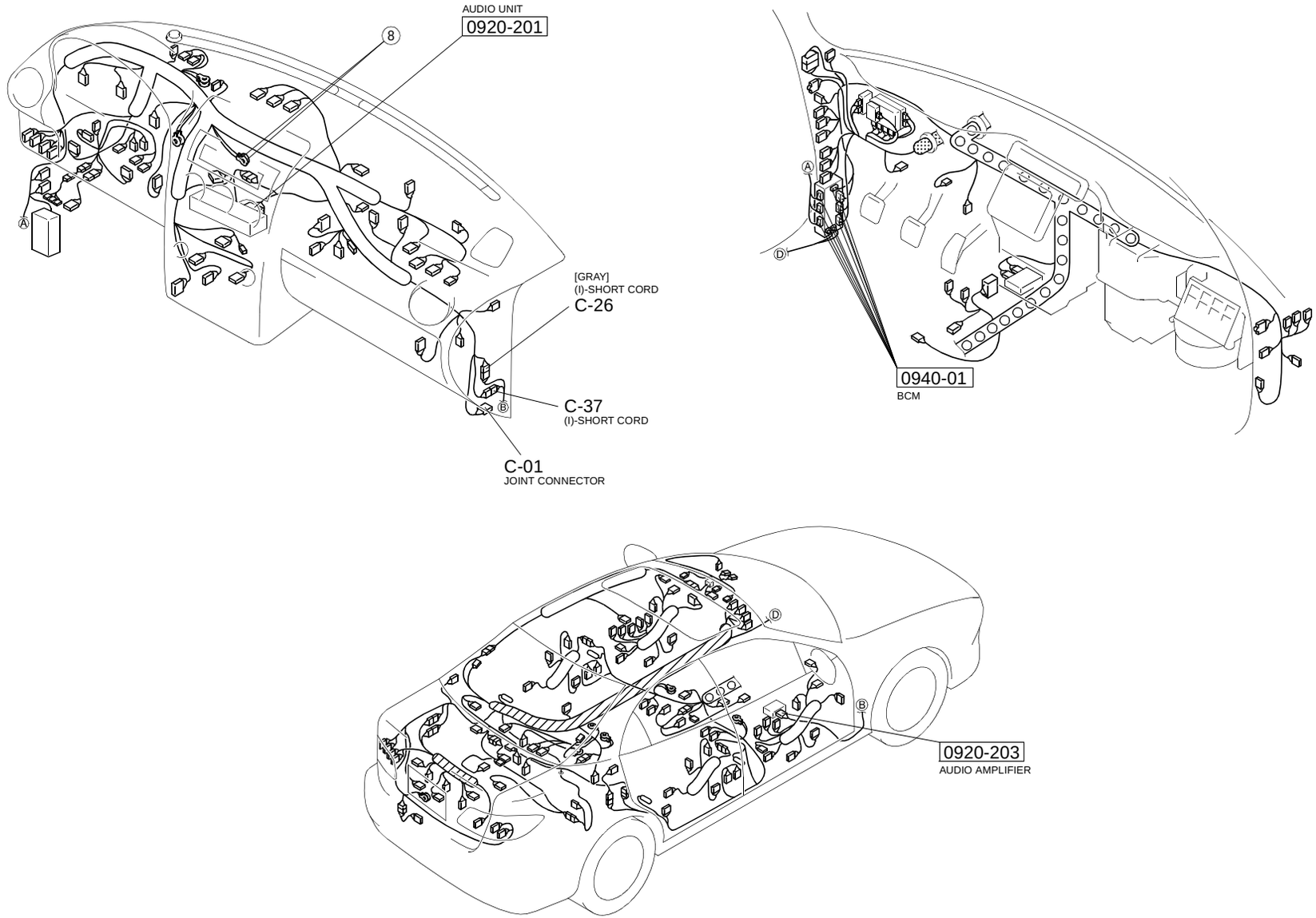

AUDIO SYSTEM (BOSE TYPE AUDIO/WITHOUT CAR-NAVIGATION SYSTEM)

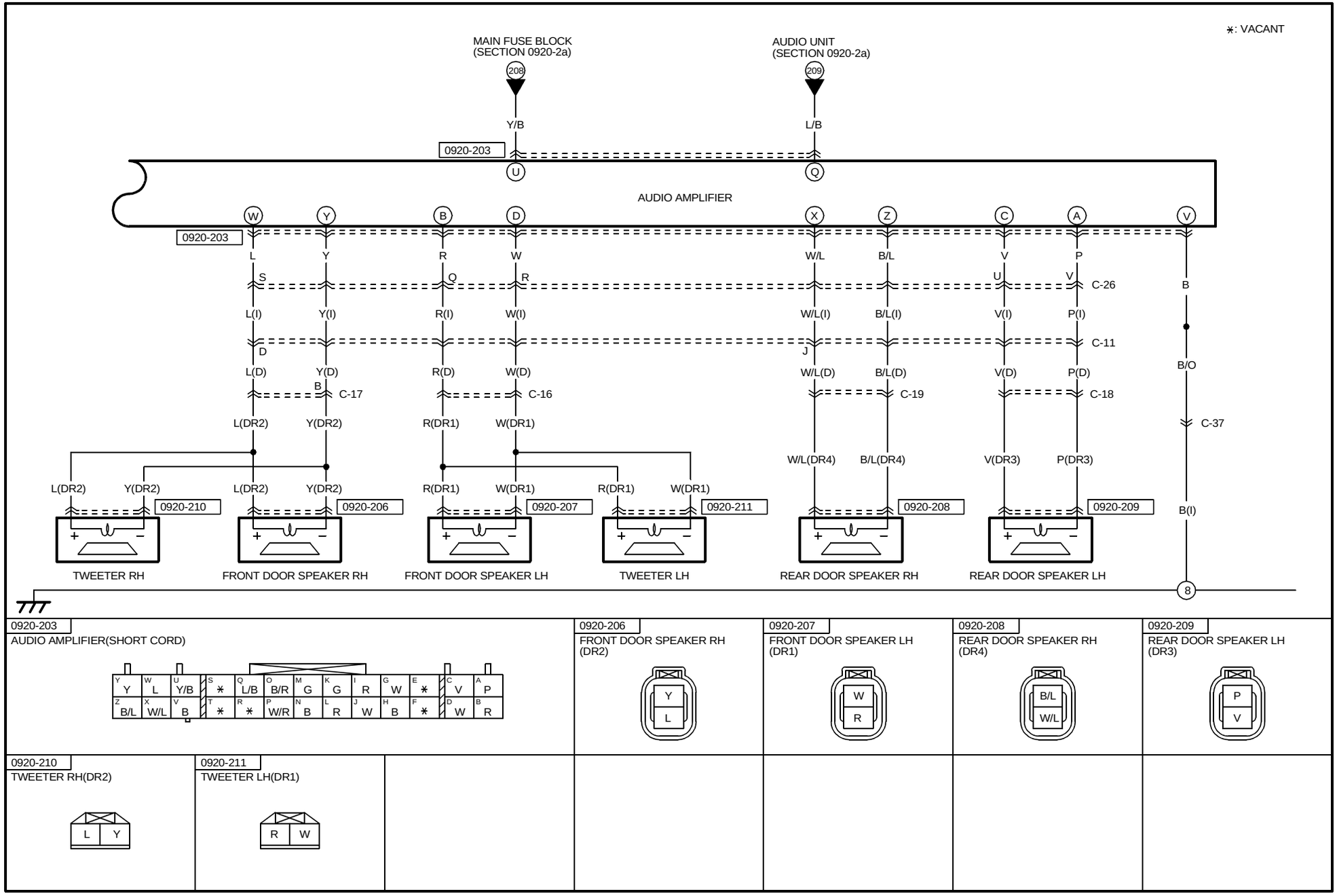

0920-203
AUDIO AMPLIFIER(SHORT CORD)

0920-206
FRONT DOOR SPEAKER RH
(DR2)

0920-207
FRONT DOOR SPEAKER LH
(DR1)

0920-208
REAR DOOR SPEAKER RH
(DR4)

0920-209
REAR DOOR SPEAKER LH
(DR3)

0920-210
TWEETER RH(DR2)

0920-211
TWEETER LH(DR1)

HARNESS SYMBOL : (F) (E) (D) (R)

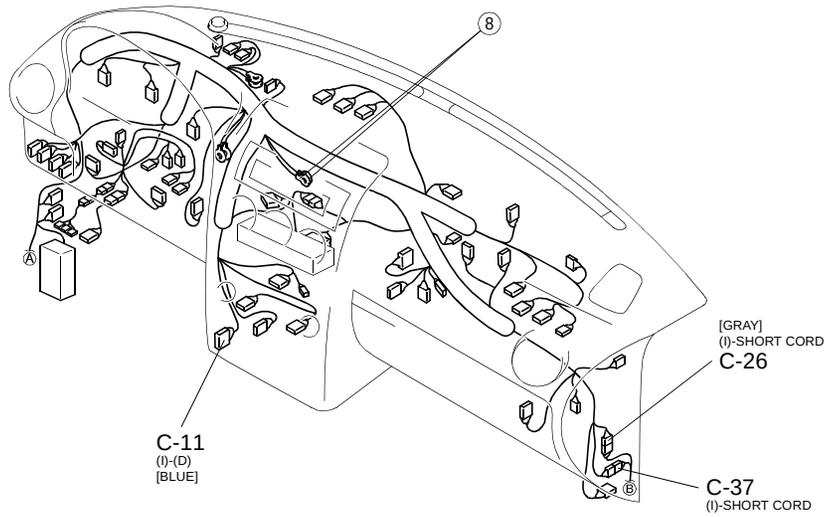

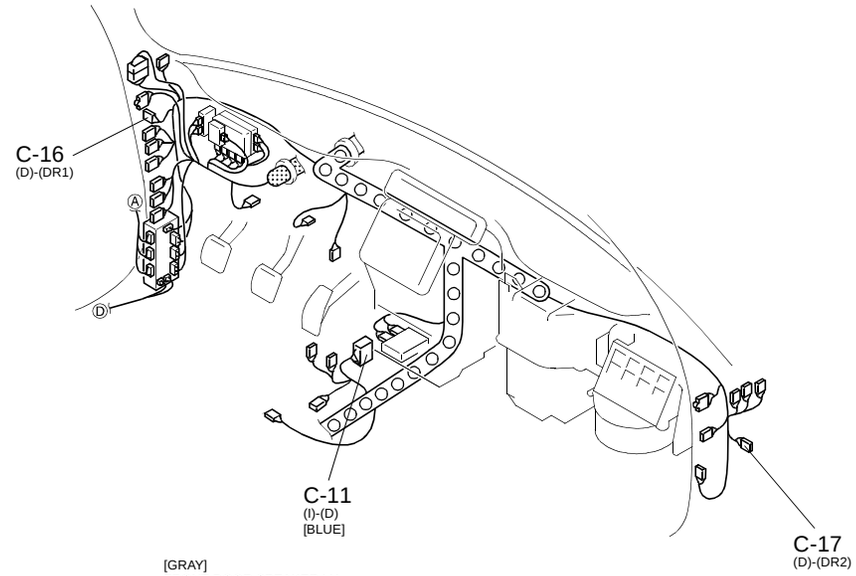

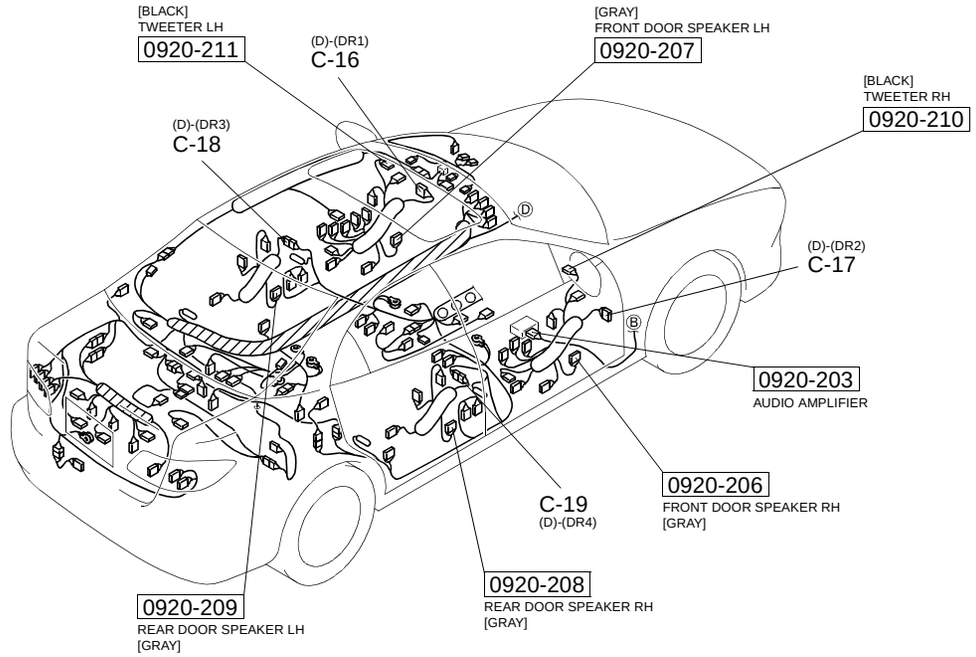

295

AUDIO SYSTEM (BOSE TYPE AUDIO/WITHOUT CAR-NAVIGATION SYSTEM)

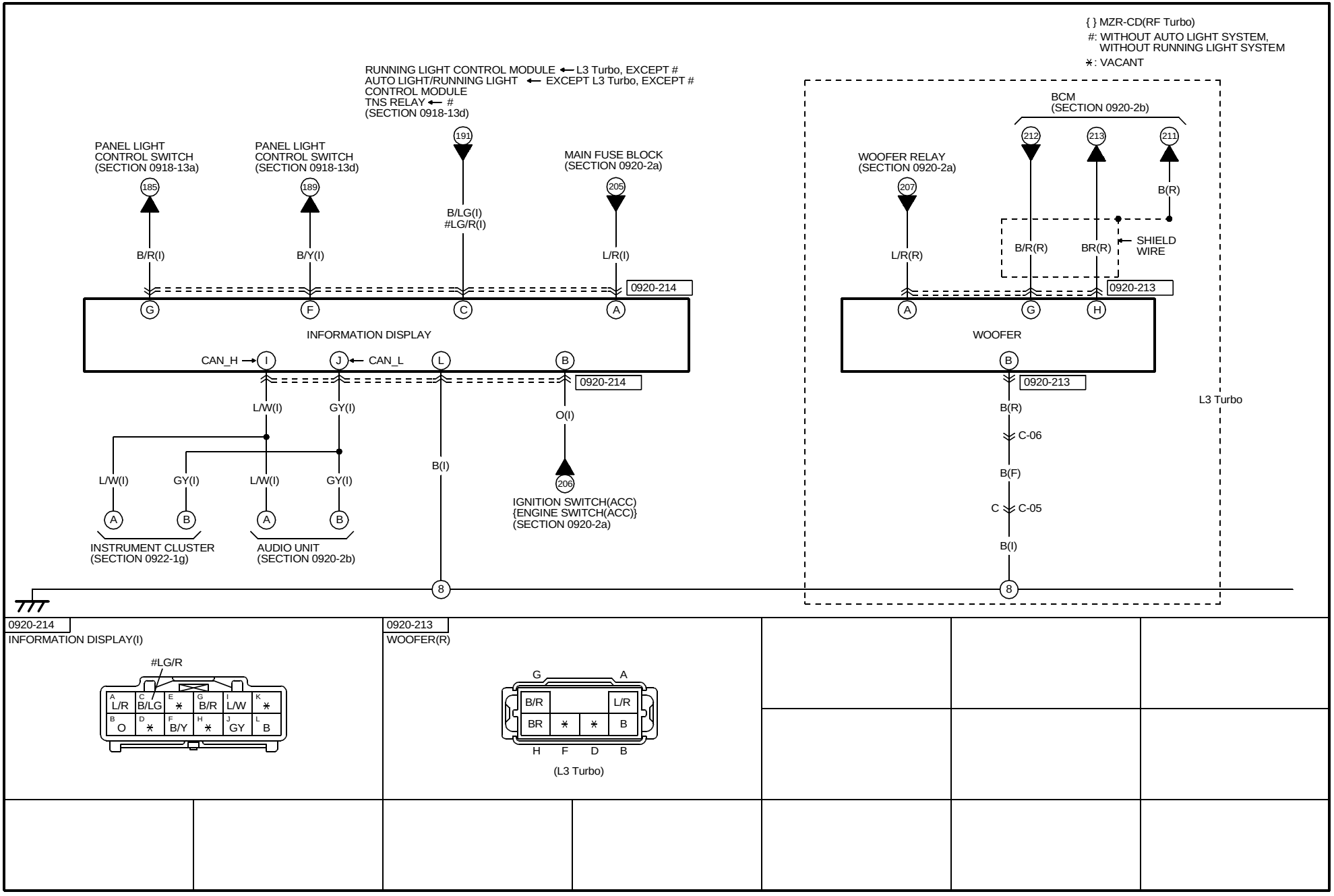

https://www.MyCarManual.com

HARNESS SYMBOL : (F) (E) (D) (R)

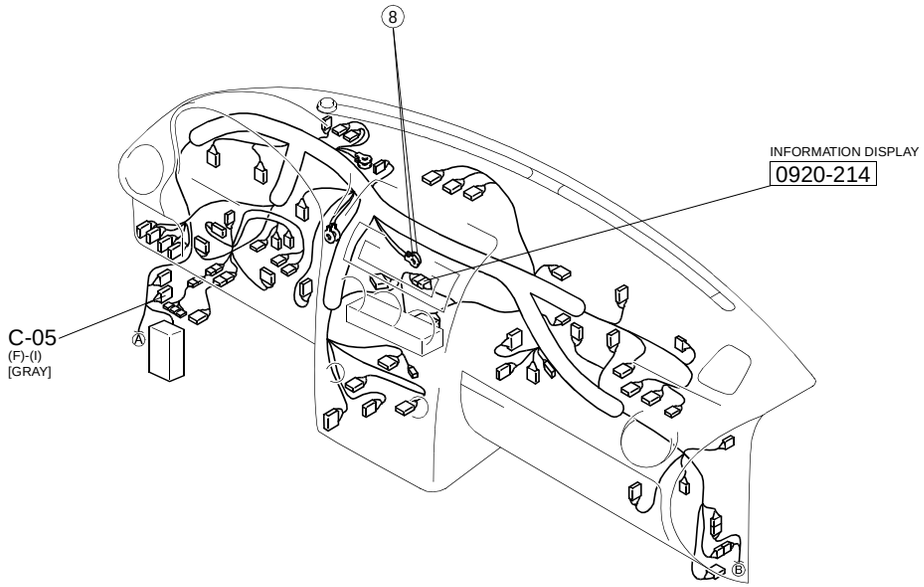

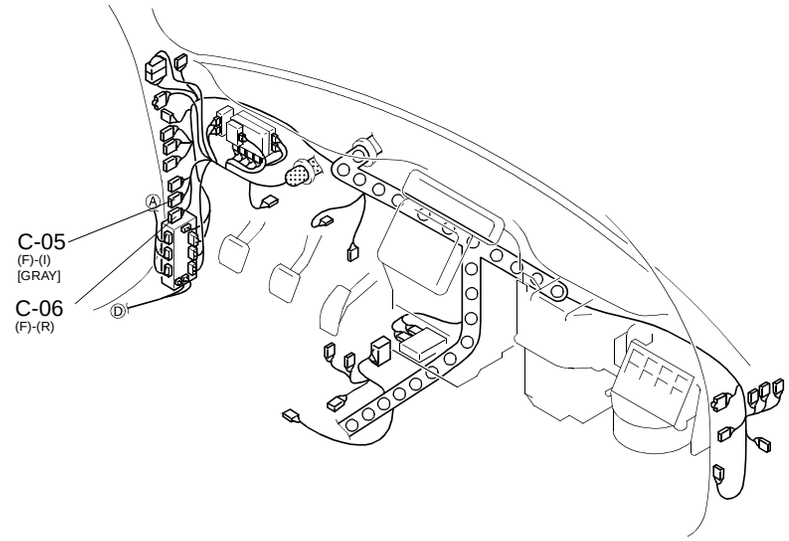

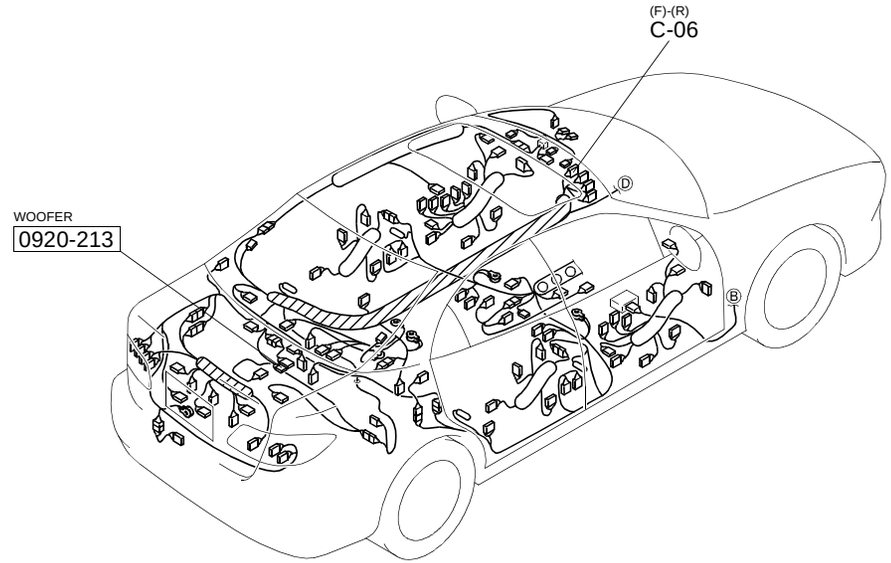

AUDIO SYSTEM (BOSE TYPE AUDIO/WITHOUT CAR-NAVIGATION SYSTEM)

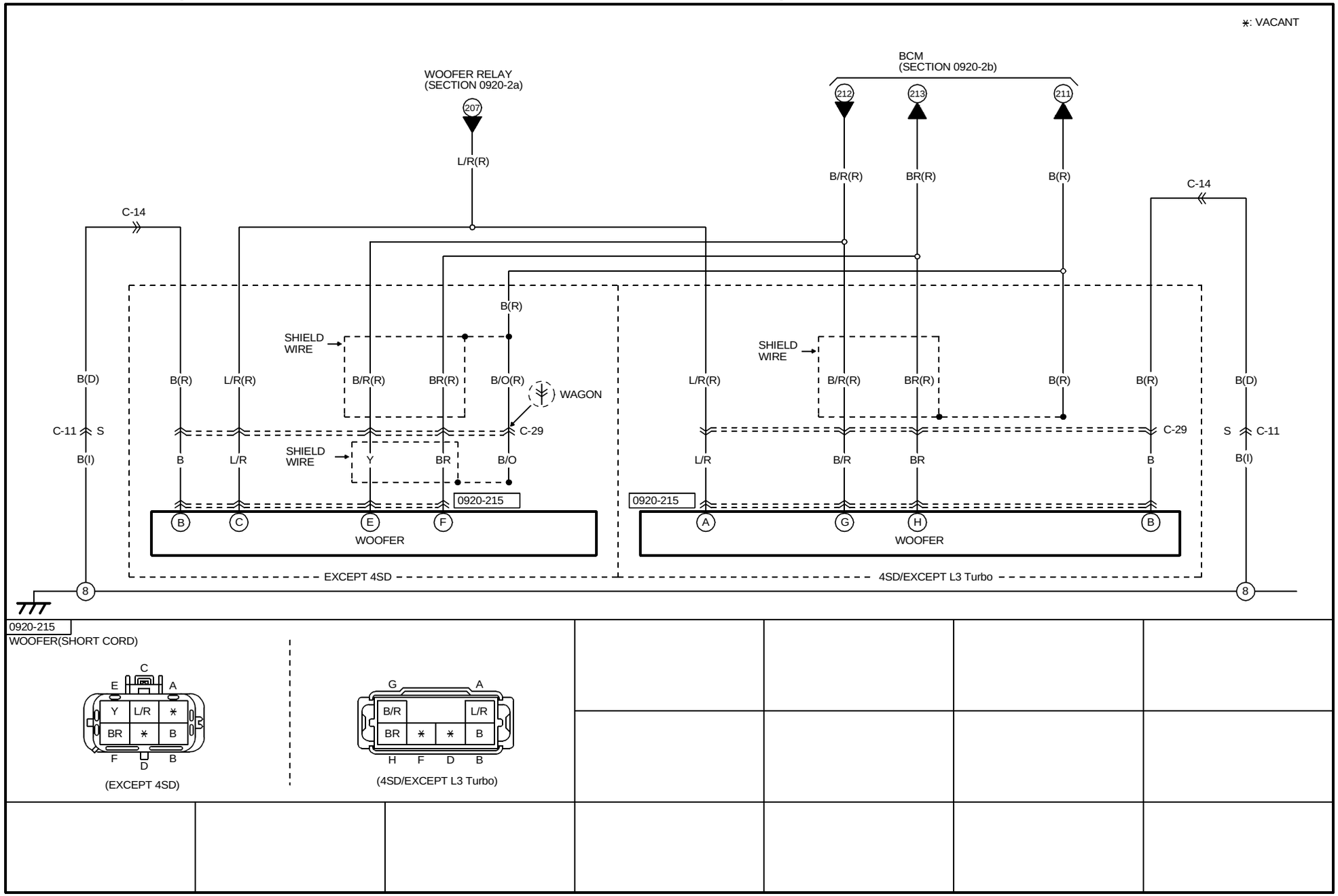

0920-215
WOOFER(SHORT CORD)

(EXCEPT 4SD)

(4SD/EXCEPT L3 Turbo)

HARNESS SYMBOL : (F) (E) (D) (R)

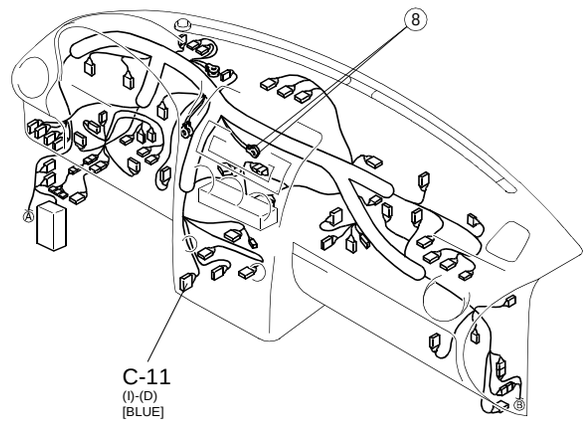

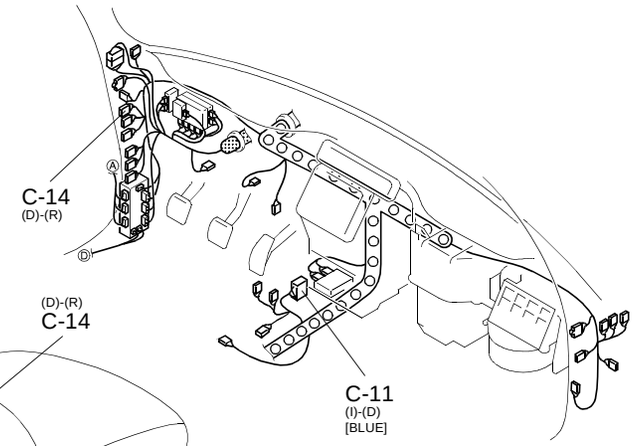

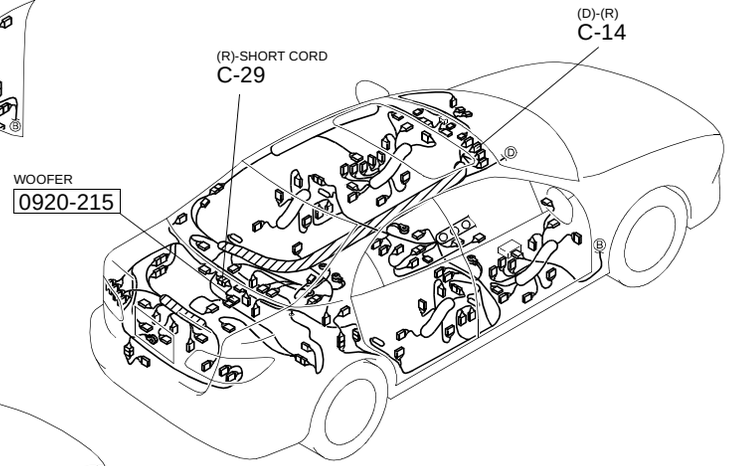

[4SD]

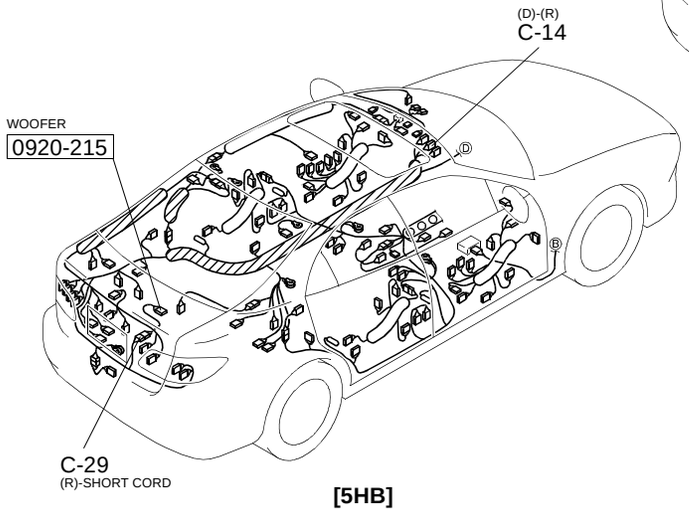

[5HB]

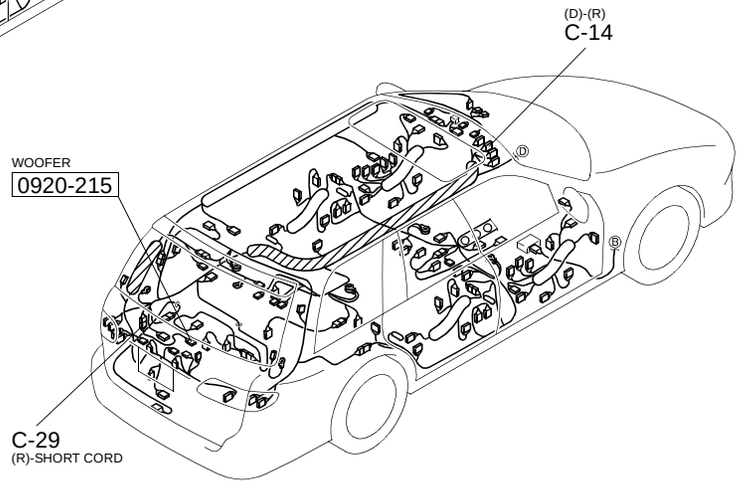

[WAGON]

AUDIO SYSTEM (BOSE TYPE AUDIO/WITH CAR-NAVIGATION SYSTEM)

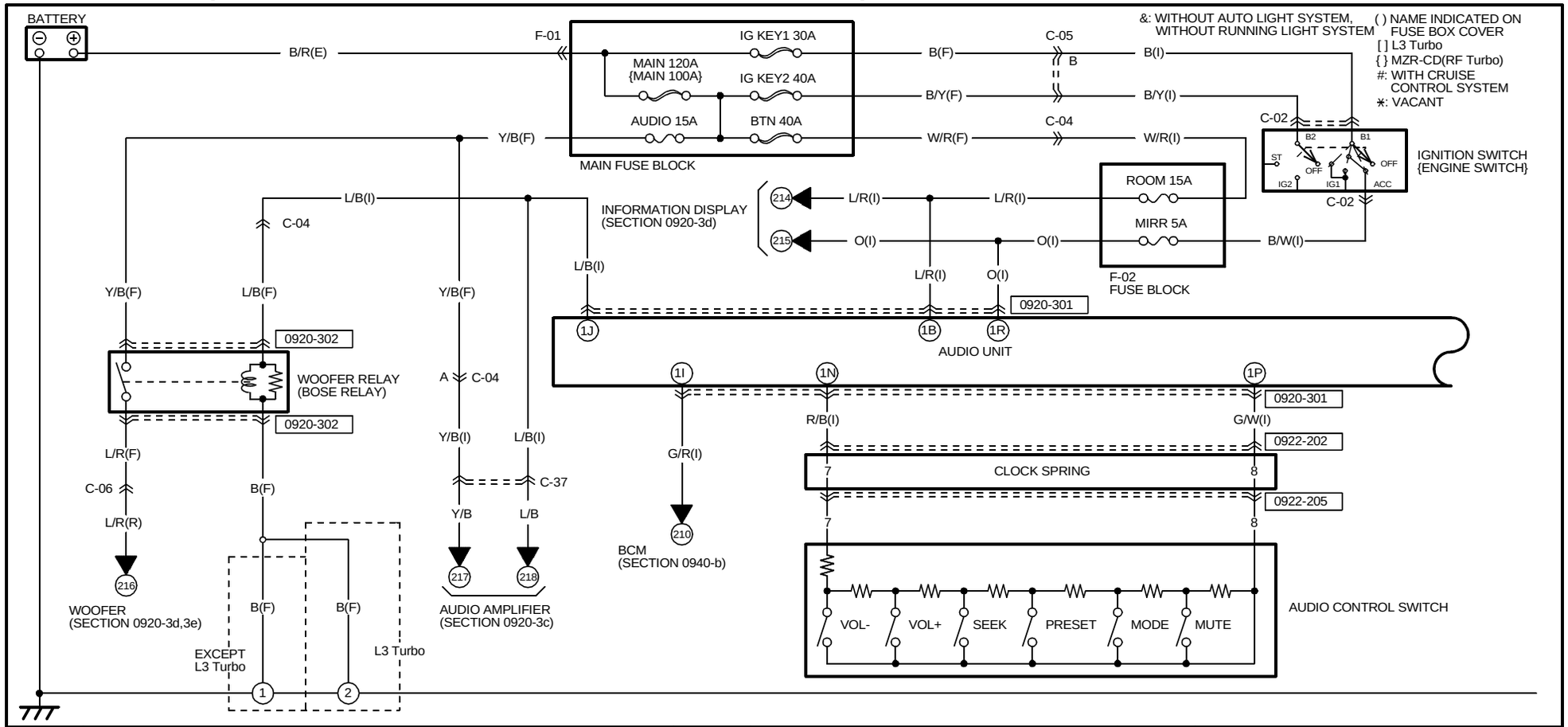

0920-301
AUDIO UNIT(I)

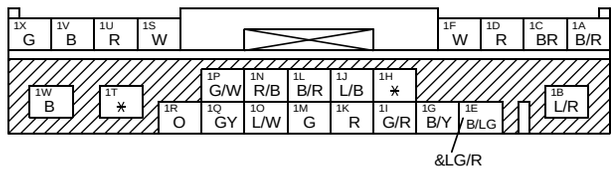

0920-302
WOOFER RELAY(F)

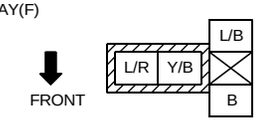

NOTE:SEEN FROM TERMINAL SIDE

0922-202
CLOCK SPRING(I)

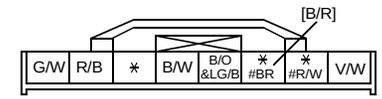

0922-205
AUDIO CONTROL SWITCH(CLOCK SPRING)

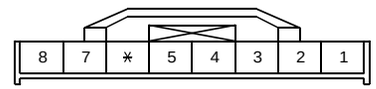

TERMINALS OF THIS CONNECTOR ARE INDICATED BY NUMBERS.

HARNESS SYMBOL : (F) (E) (D) (R)

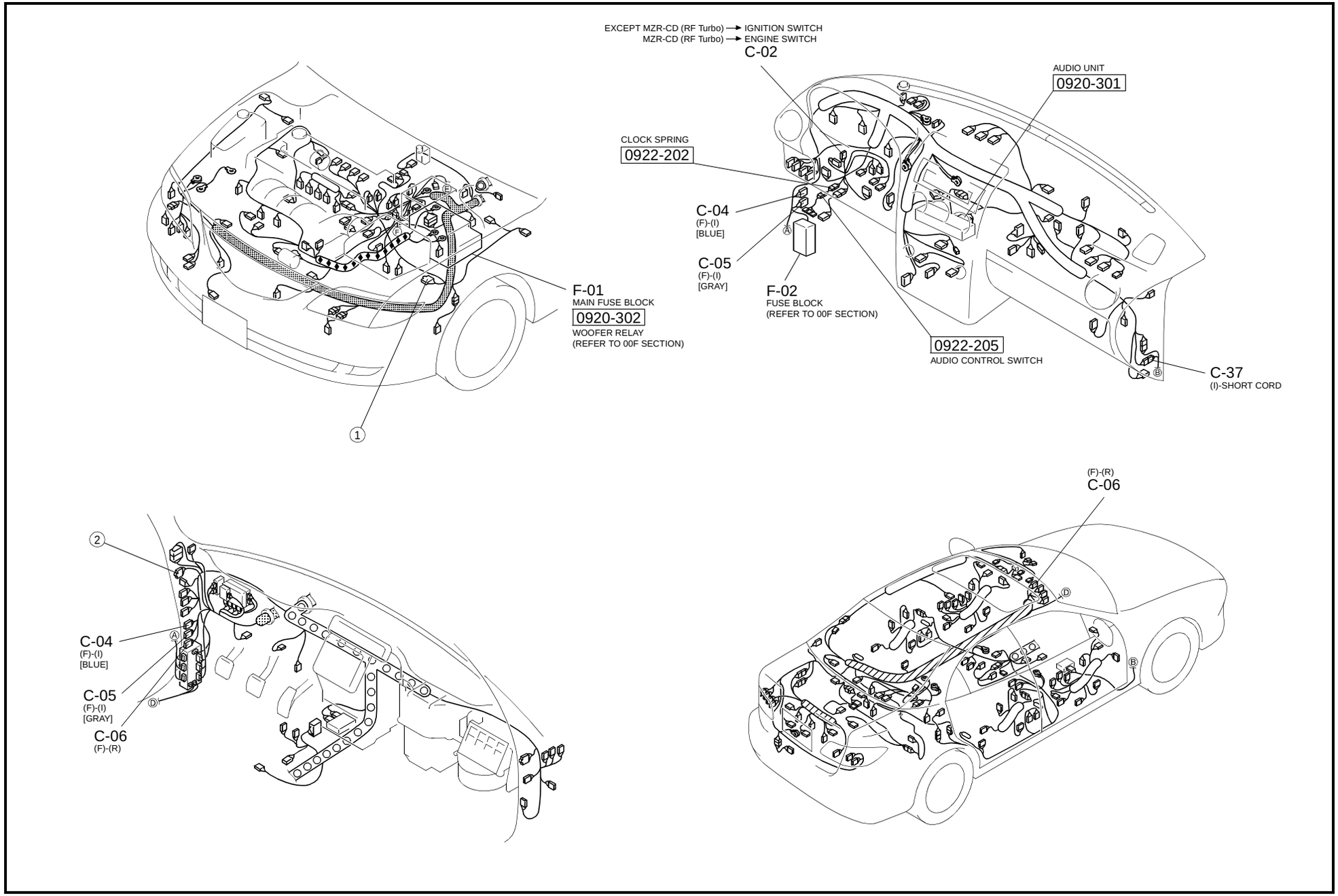

AUDIO SYSTEM (BOSE TYPE AUDIO/WITH CAR-NAVIGATION SYSTEM)

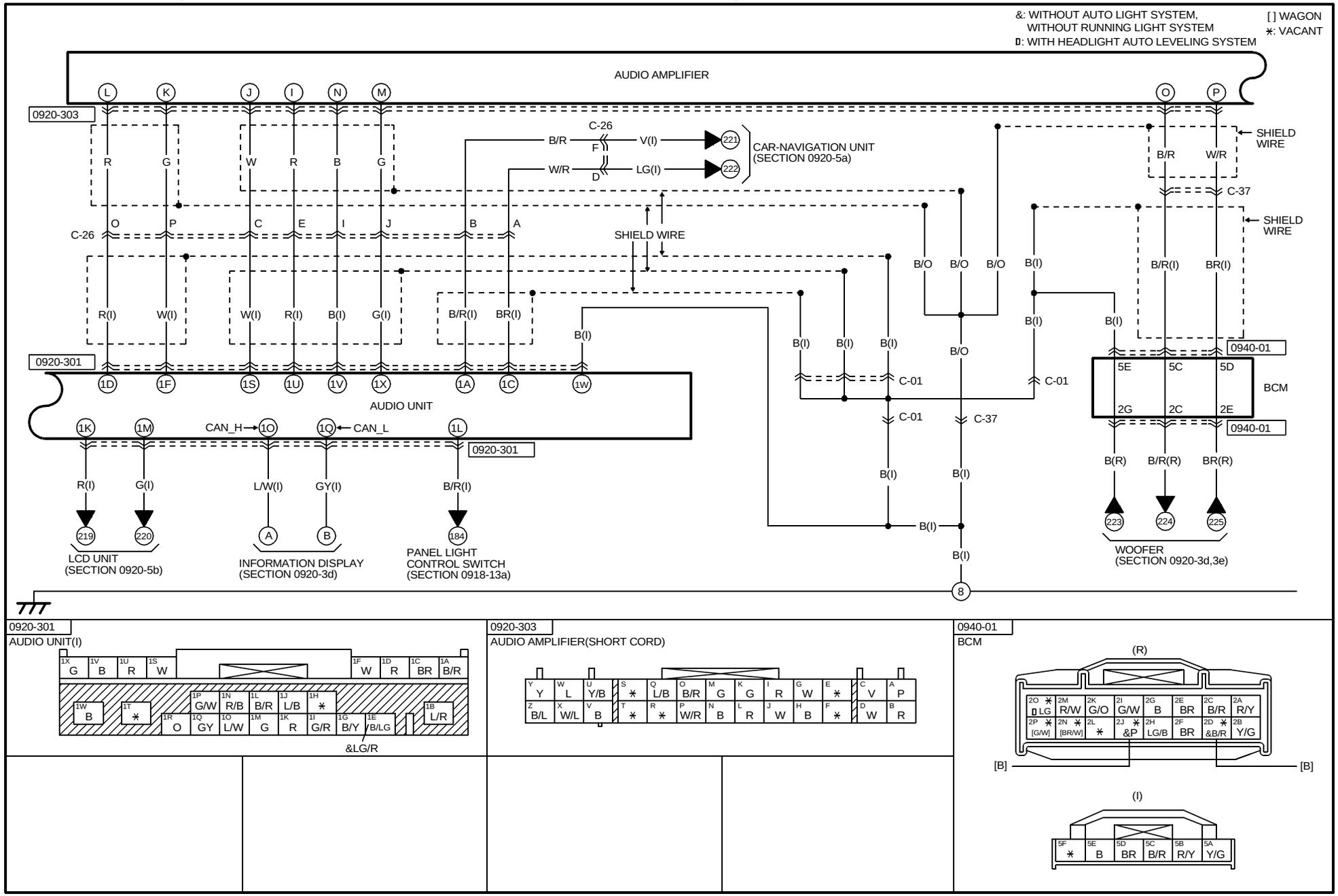

HARNESS SYMBOL : (F) (E) (D) (R)

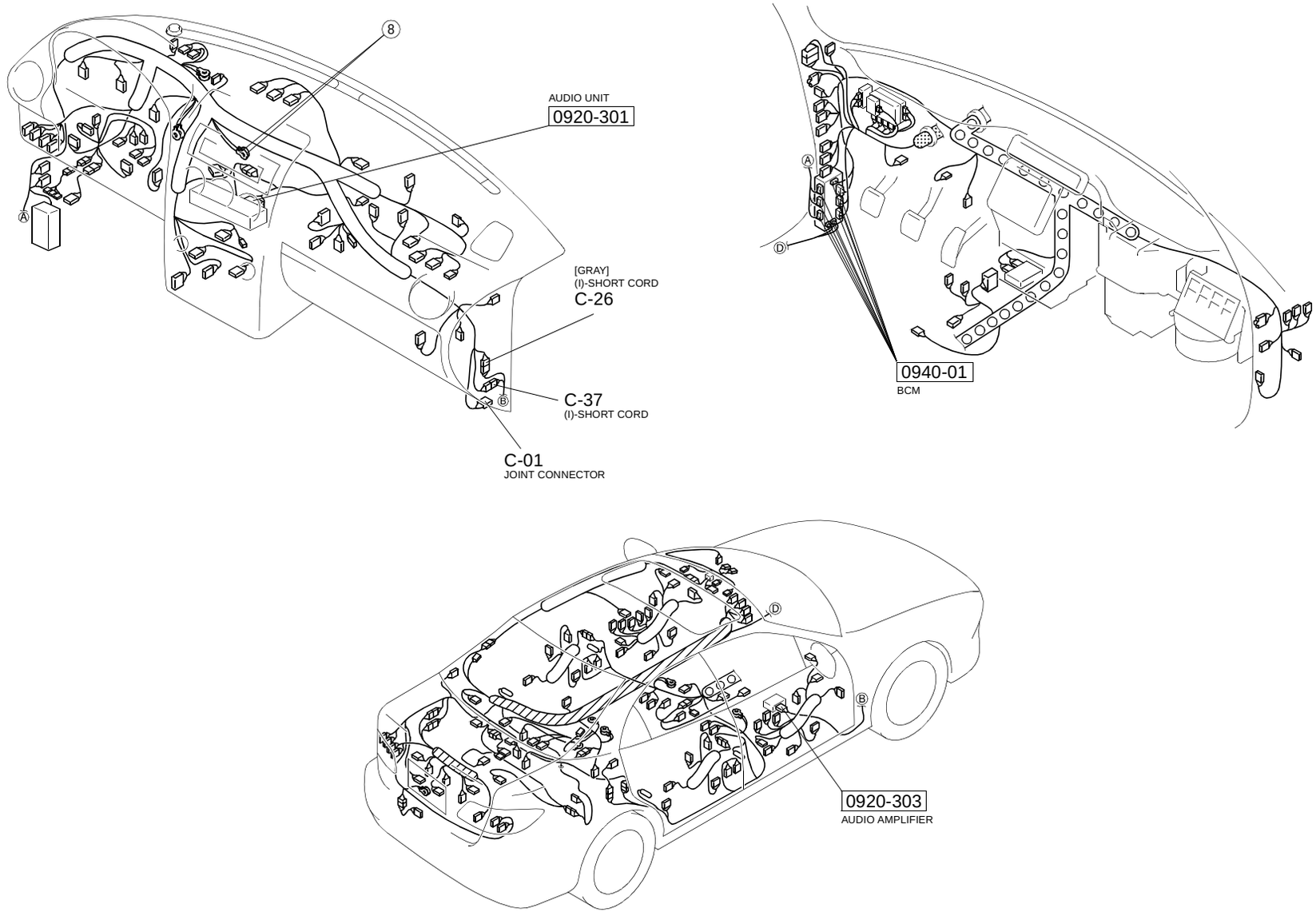

AUDIO SYSTEM (BOSE TYPE AUDIO/WITH CAR-NAVIGATION SYSTEM)

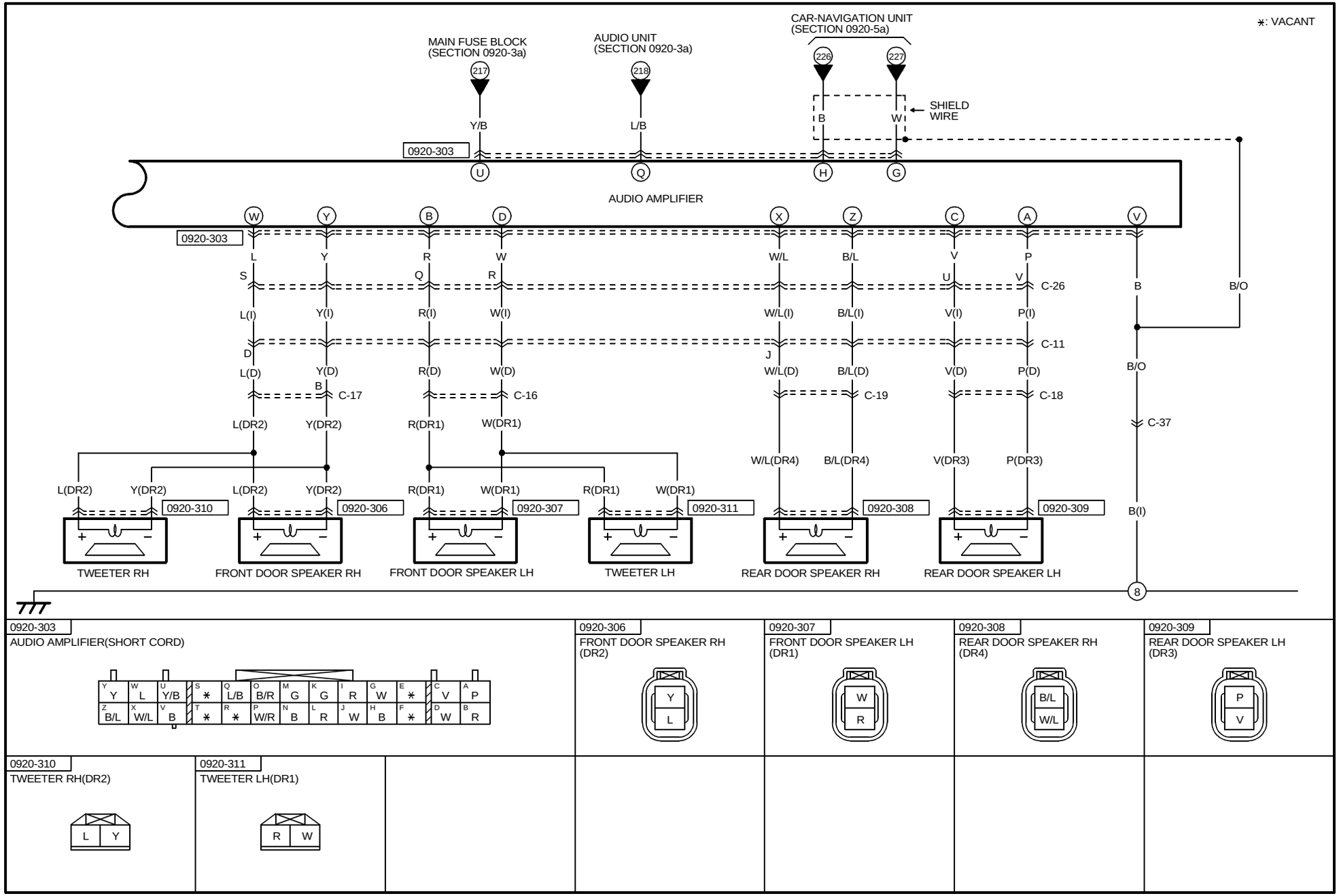

0920-303
AUDIO AMPLIFIER(SHORT CORD)

0920-306
FRONT DOOR SPEAKER RH (DR2)

0920-307
FRONT DOOR SPEAKER LH (DR1)

0920-308
REAR DOOR SPEAKER RH (DR4)

0920-309
REAR DOOR SPEAKER LH (DR3)

0920-310
TWEETER RH(DR2)

0920-311
TWEETER LH(DR1)

HARNESS SYMBOL : (F) (E) (D) (R)

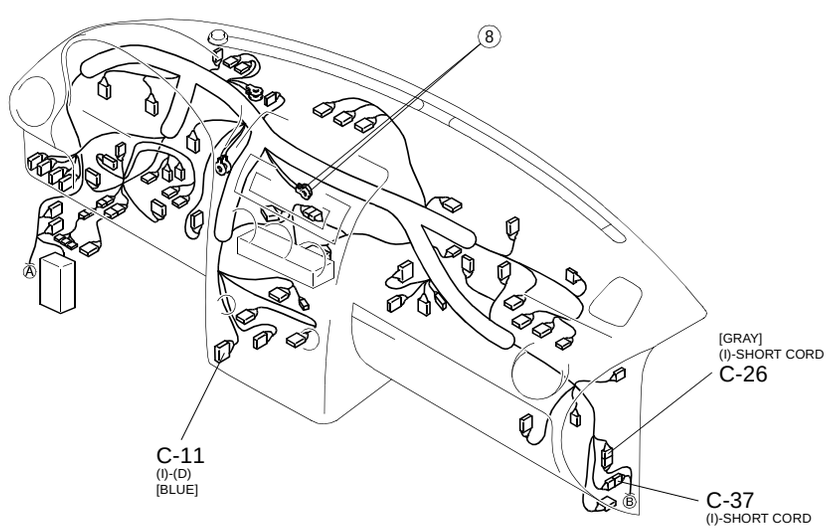

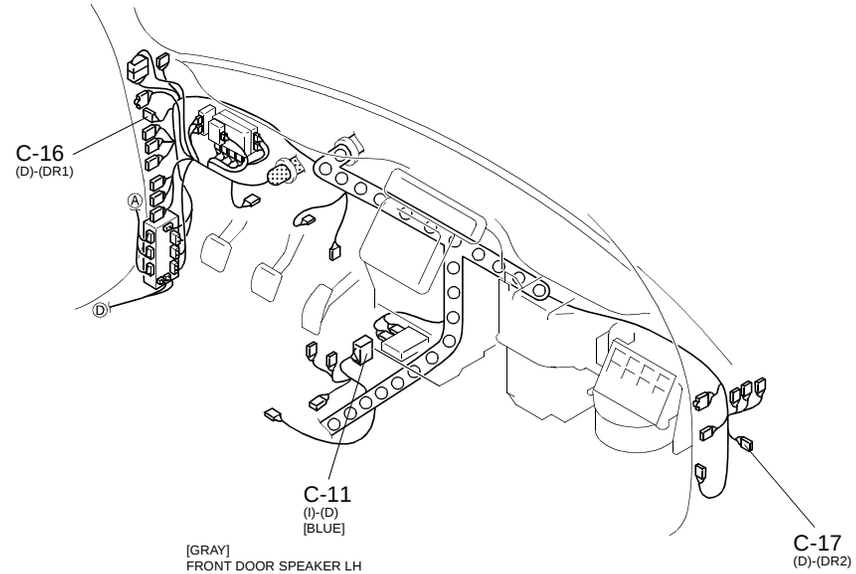

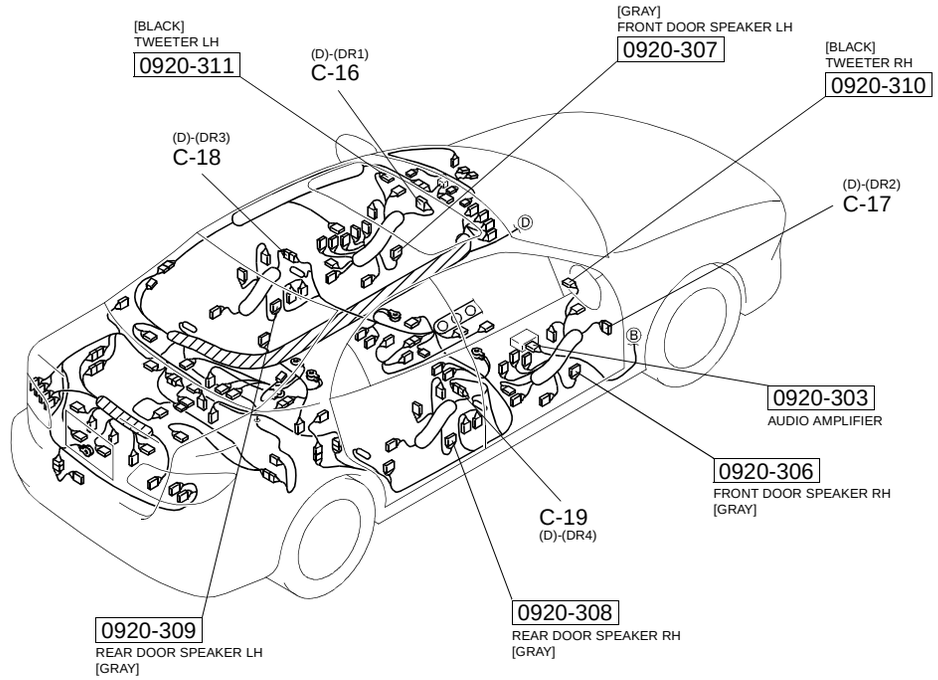

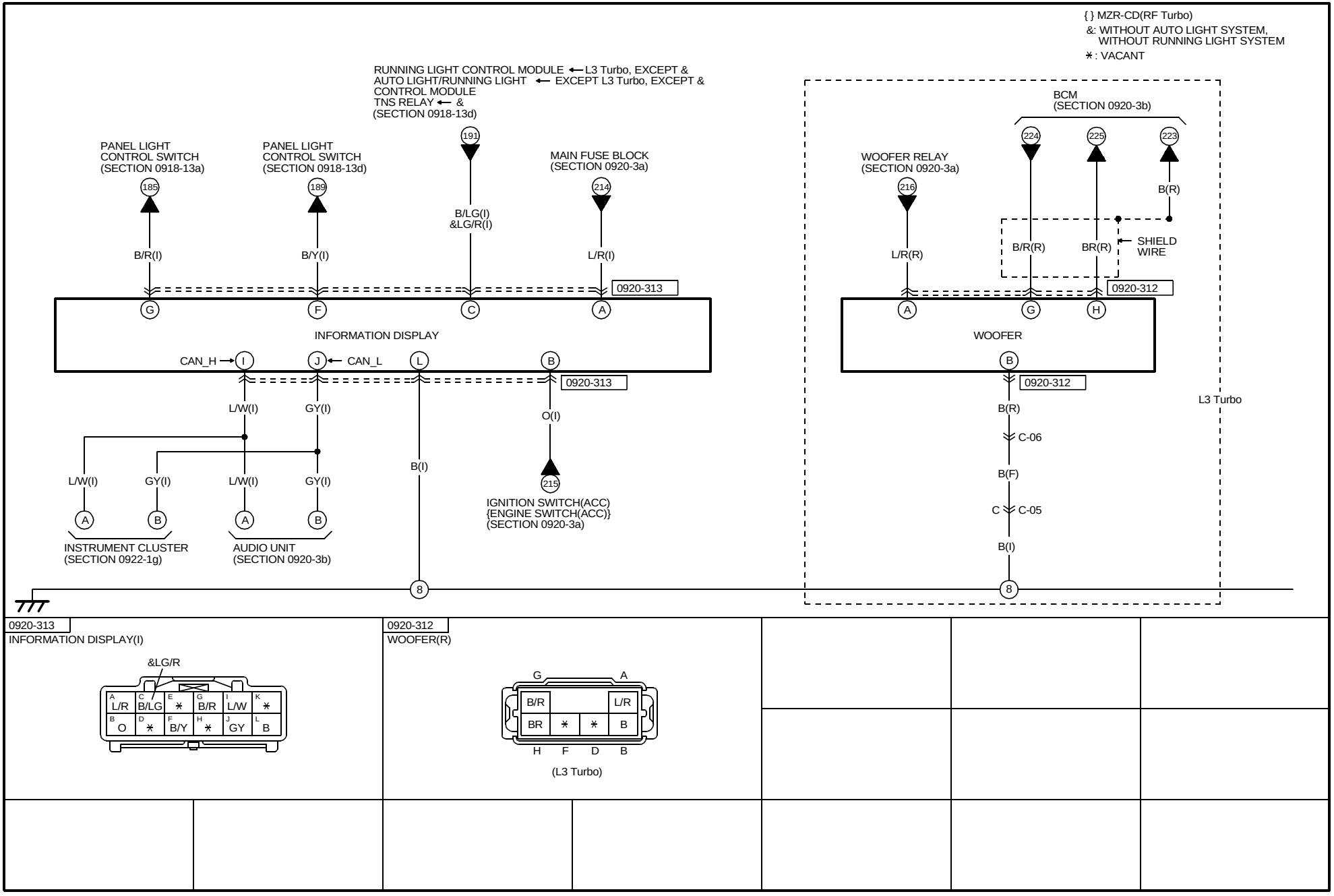

https://www.MyCarManual.com

HARNESS SYMBOL : (F) (E) (D) (R)

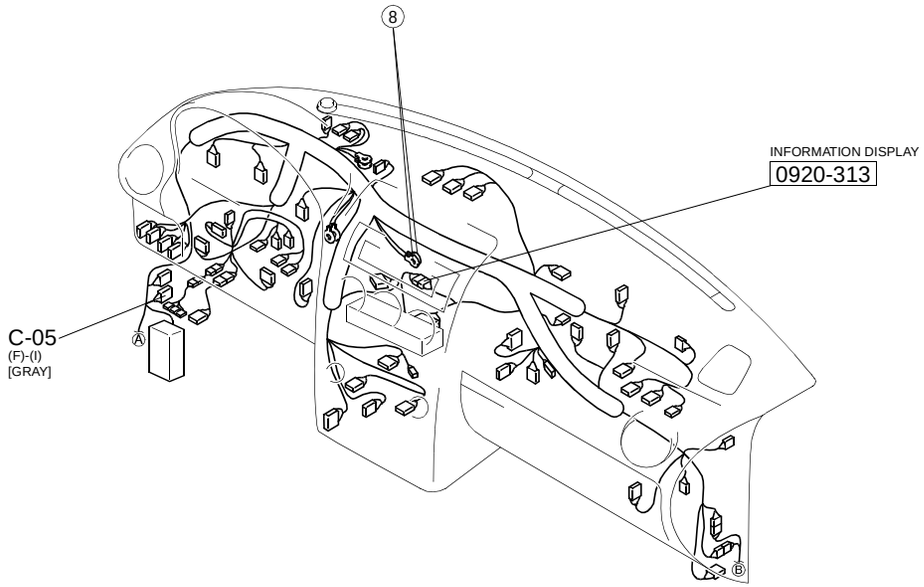

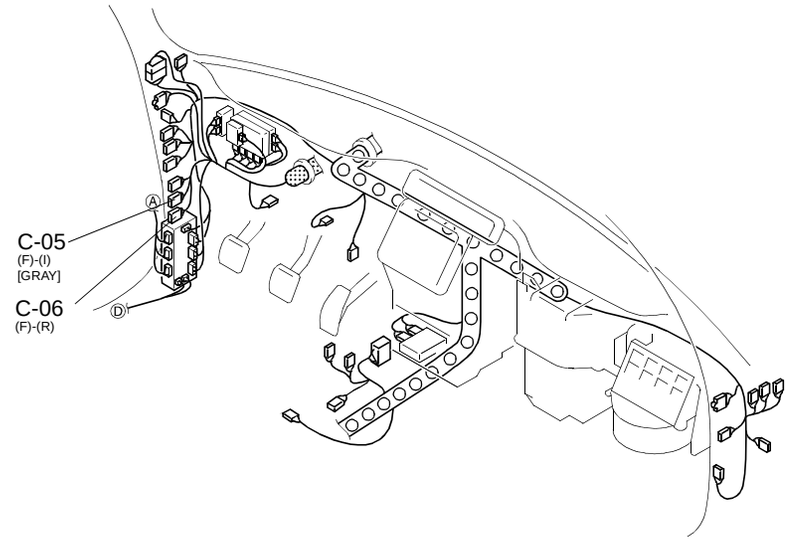

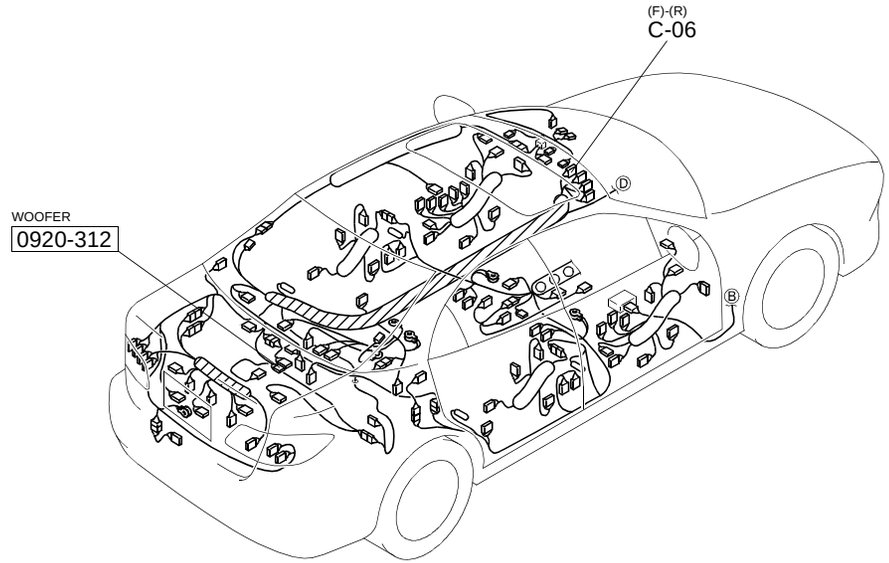

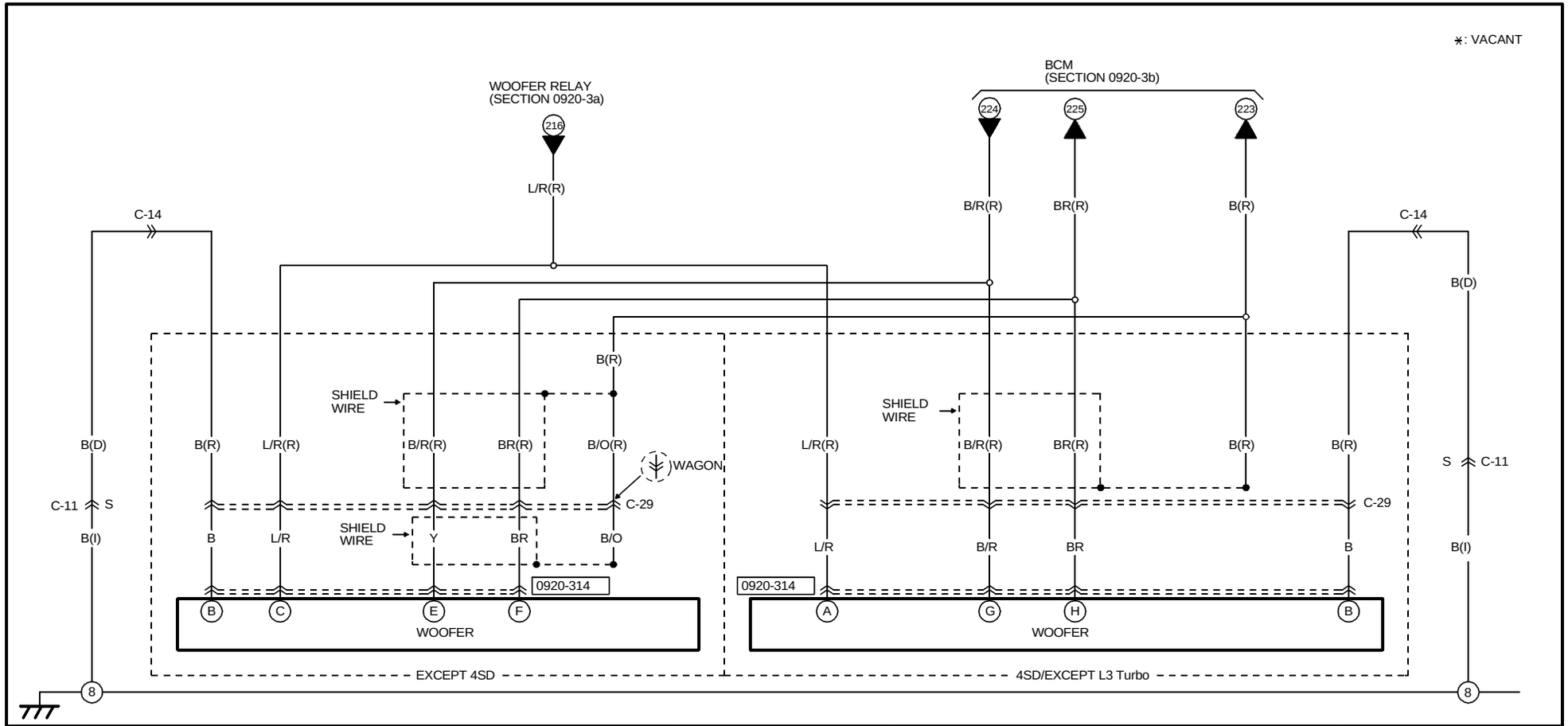

0920-314

WOOFER(SHORT CORD)

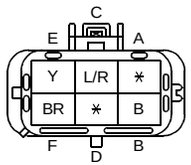

(EXCEPT 4SD)

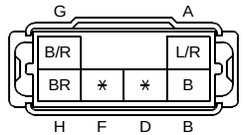

(4SD/EXCEPT L3 Turbo)

HARNESS SYMBOL : (F) (E) (D) (R)

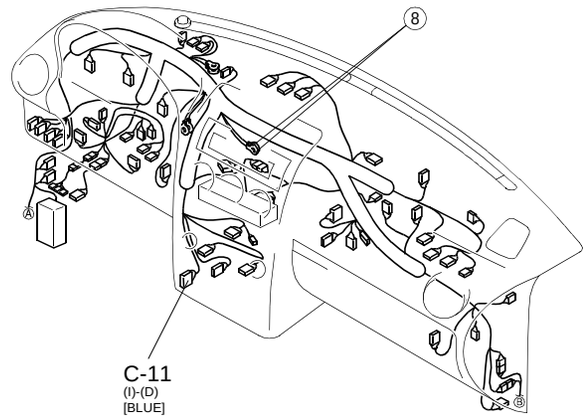

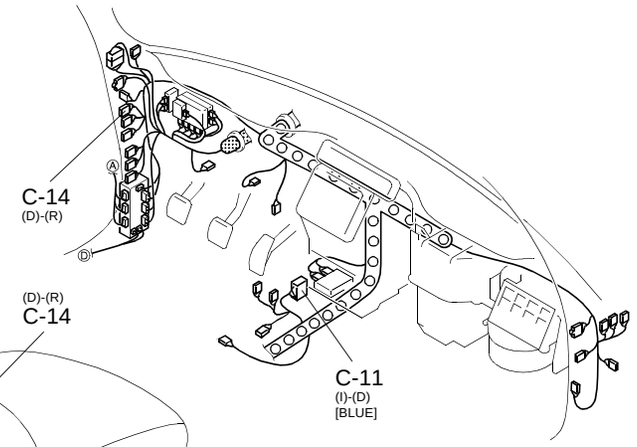

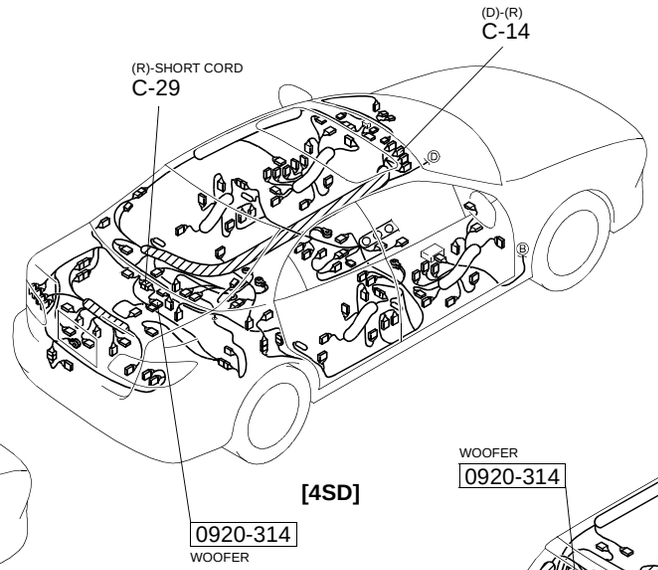

[4SD]

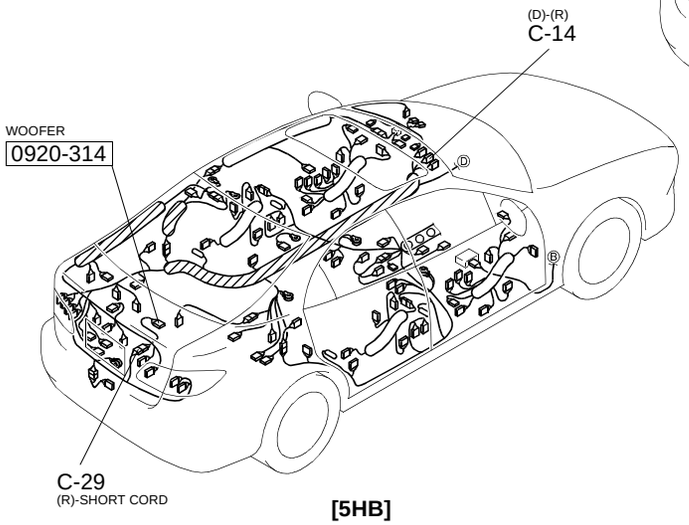

[5HB]

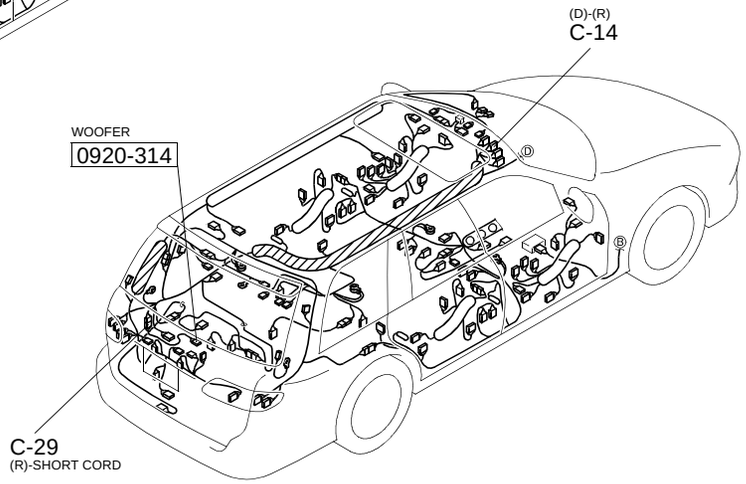

[WAGON]

AUDIO SYSTEM (STANDARD TYPE AUDIO)

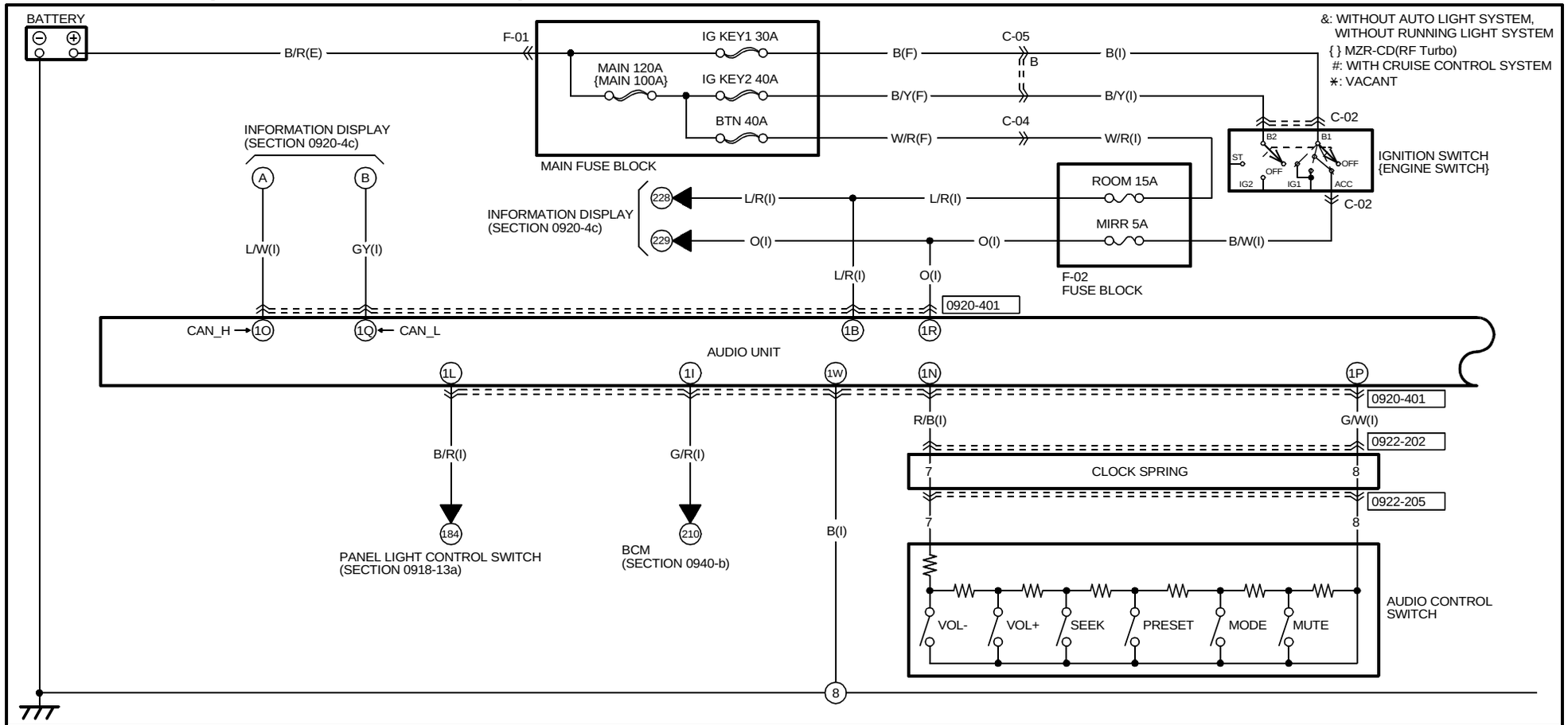

0920-401

AUDIO UNIT(I)

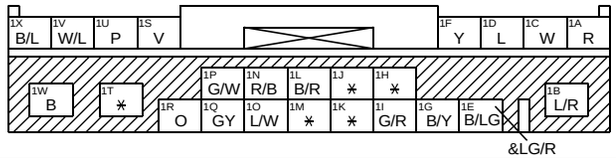

0922-202

CLOCK SPRING(I)

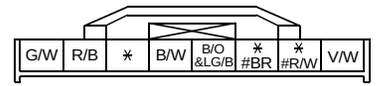

0922-205

AUDIO CONTROL SWITCH(CLOCK SPRING)

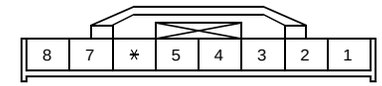

TERMINALS OF THIS CONNECTOR
ARE INDICATED BY NUMBERS.

HARNESS SYMBOL : (F) (E) (D) (R)

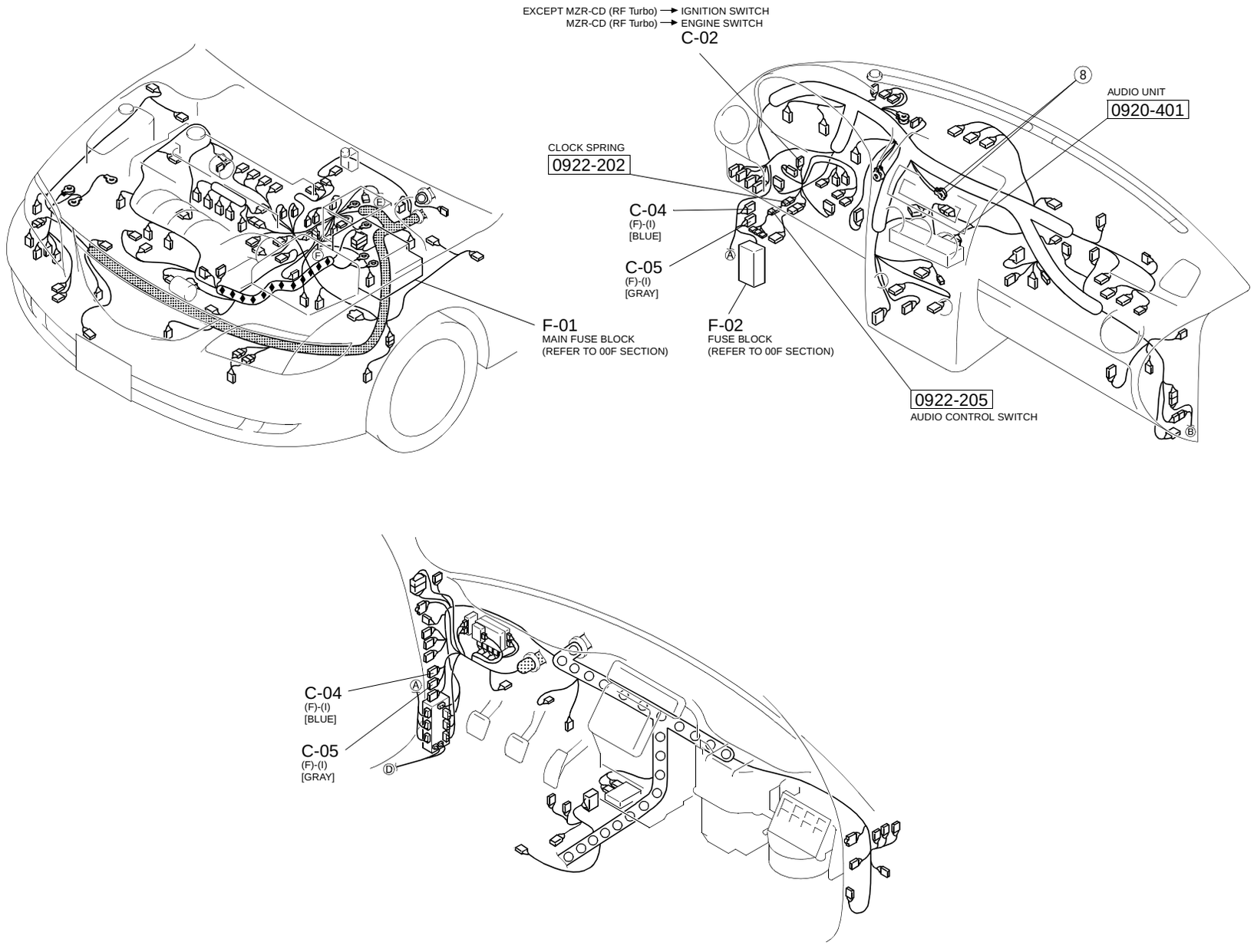

&: WITHOUT AUTO LIGHT SYSTEM, WITHOUT RUNNING LIGHT SYSTEM
⁎: VACANT

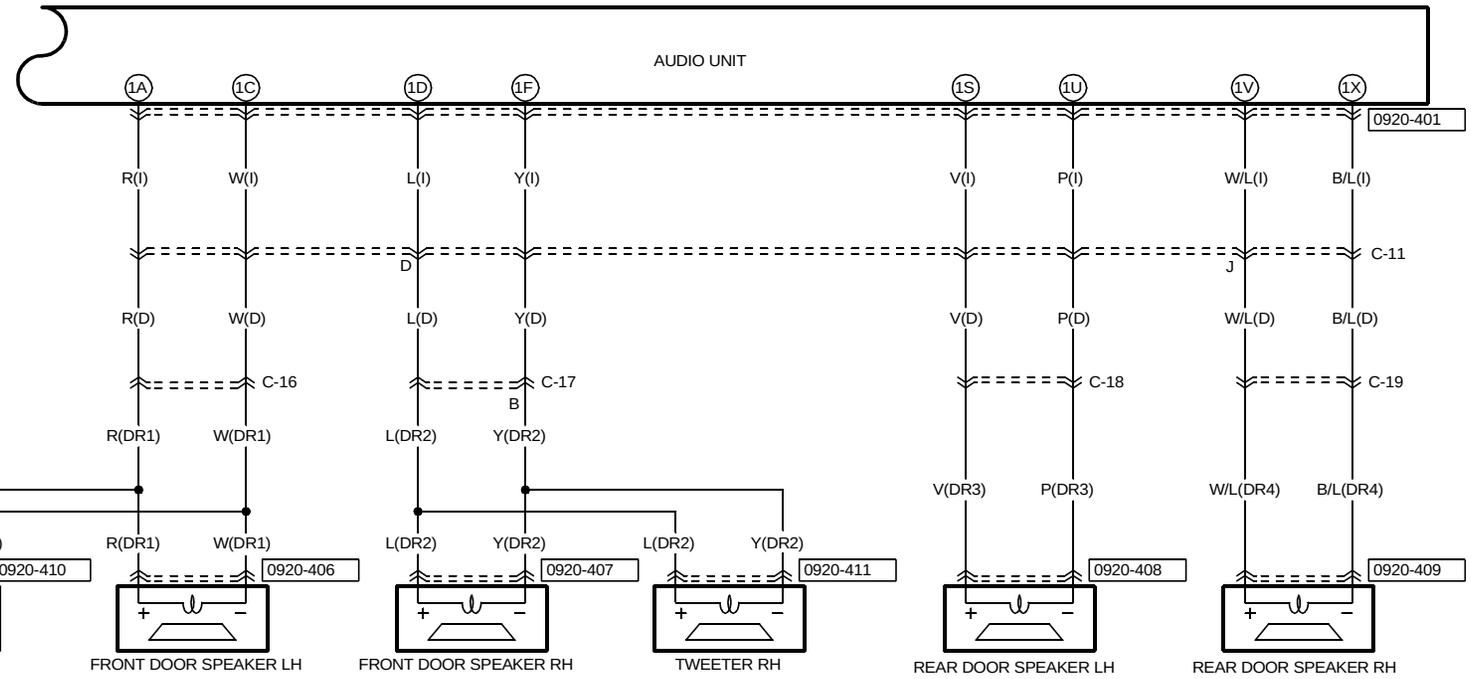

0920-401
AUDIO UNIT(I)

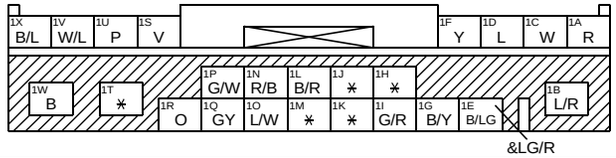

0920-406
FRONT DOOR SPEAKER LH (DR1)

0920-407
FRONT DOOR SPEAKER RH (DR2)

0920-408
REAR DOOR SPEAKER LH (DR3)

0920-409
REAR DOOR SPEAKER RH (DR4)

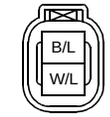

0920-410
TWEETER LH(DR1)

0920-411
TWEETER RH(DR2)

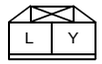

HARNESS SYMBOL : (F) (E) (D) (R)

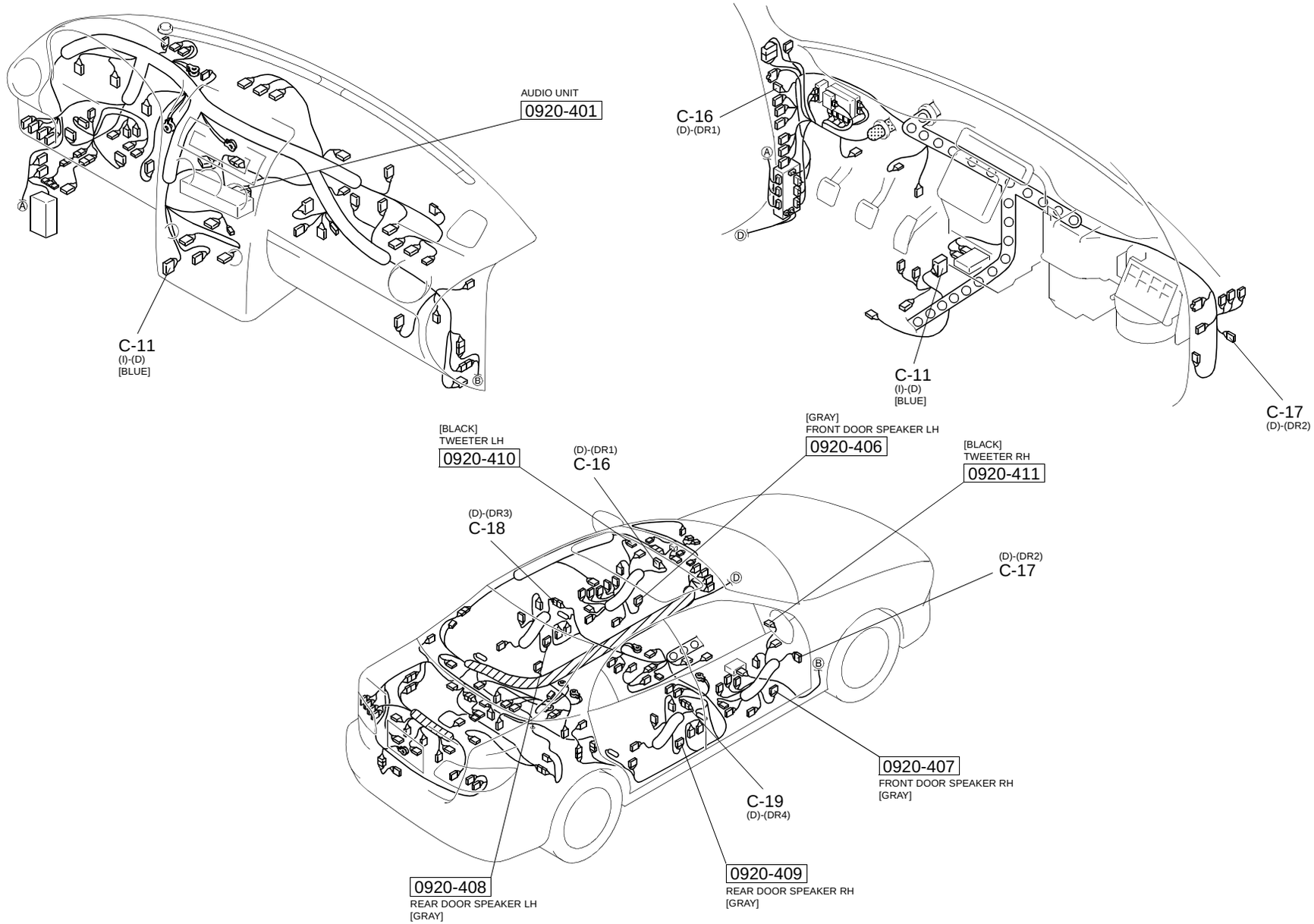

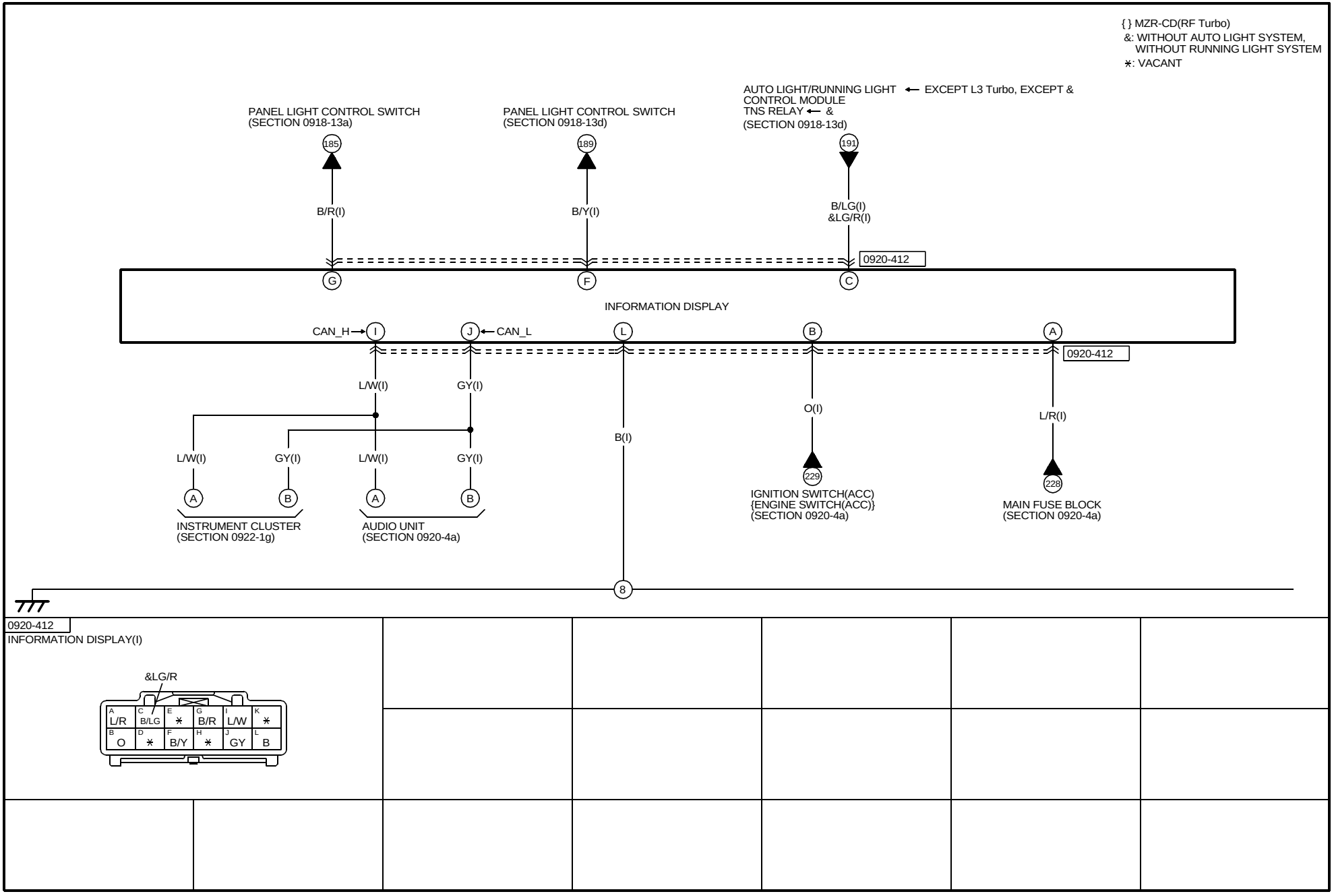

https://www.MyCarManual.com

HARNESS SYMBOL : (F) (E) (D) (R)

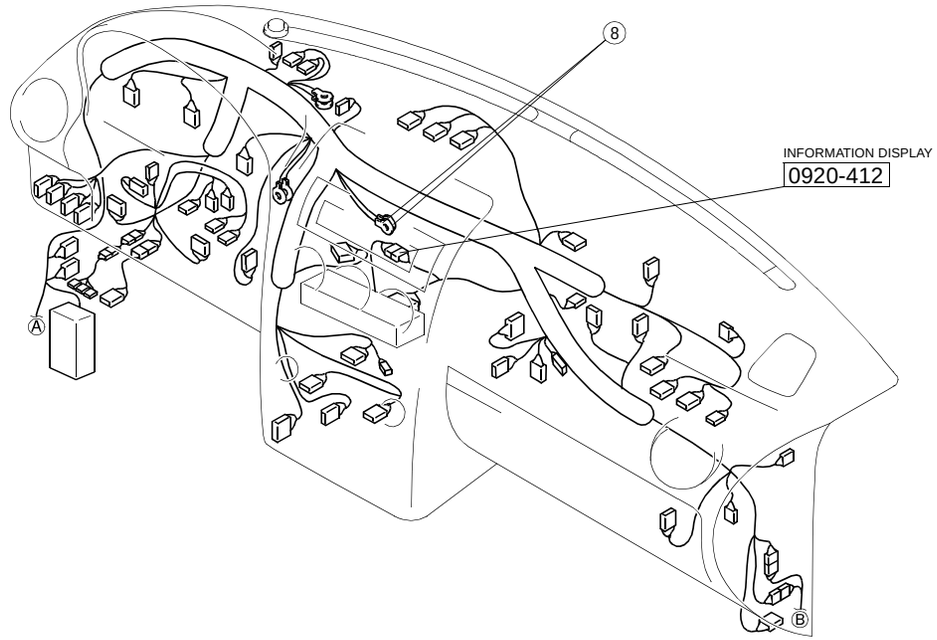

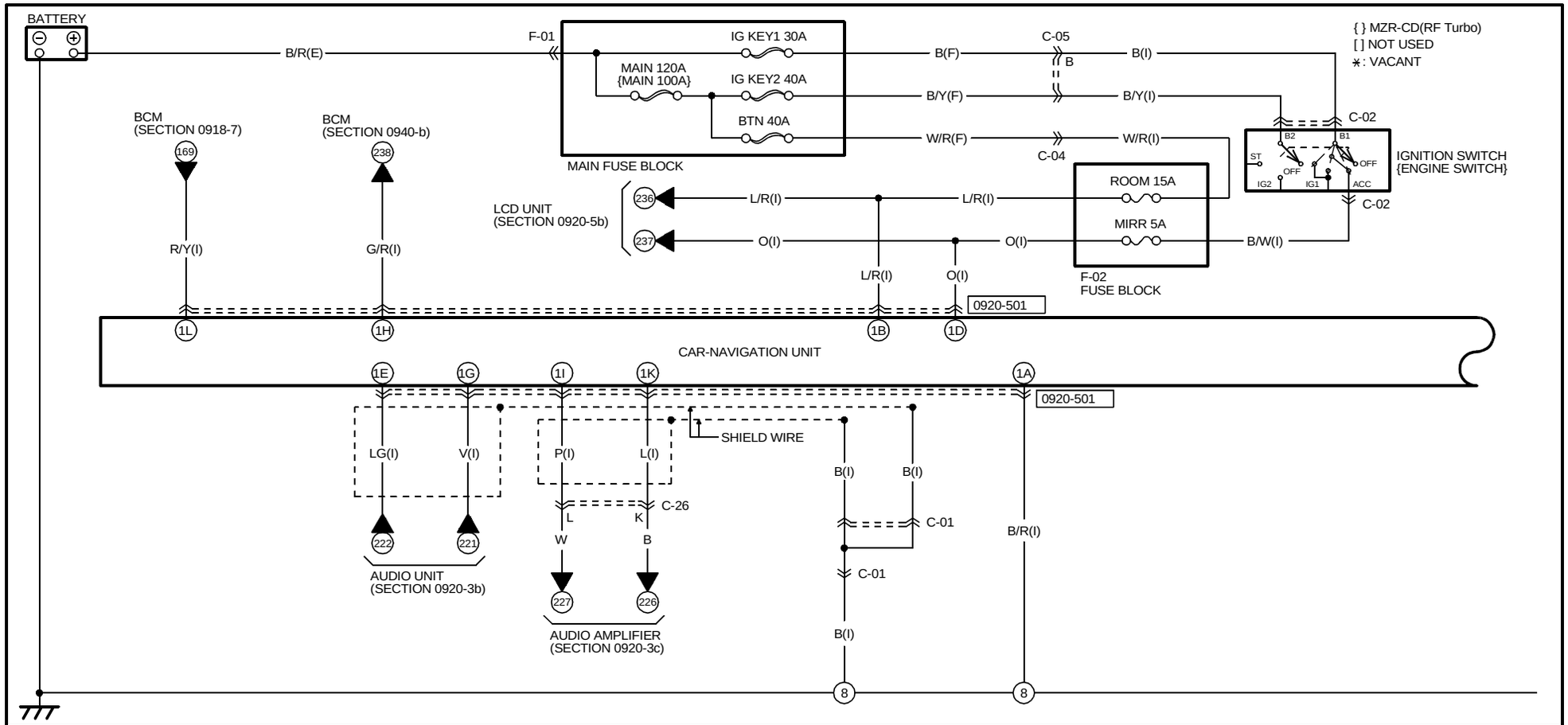

0920-501

CAR-NAVIGATION UNIT(I)

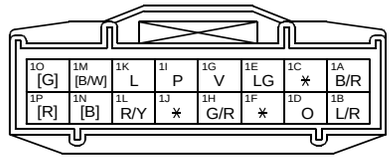

HARNESS SYMBOL : (F) (E) (D) (R)

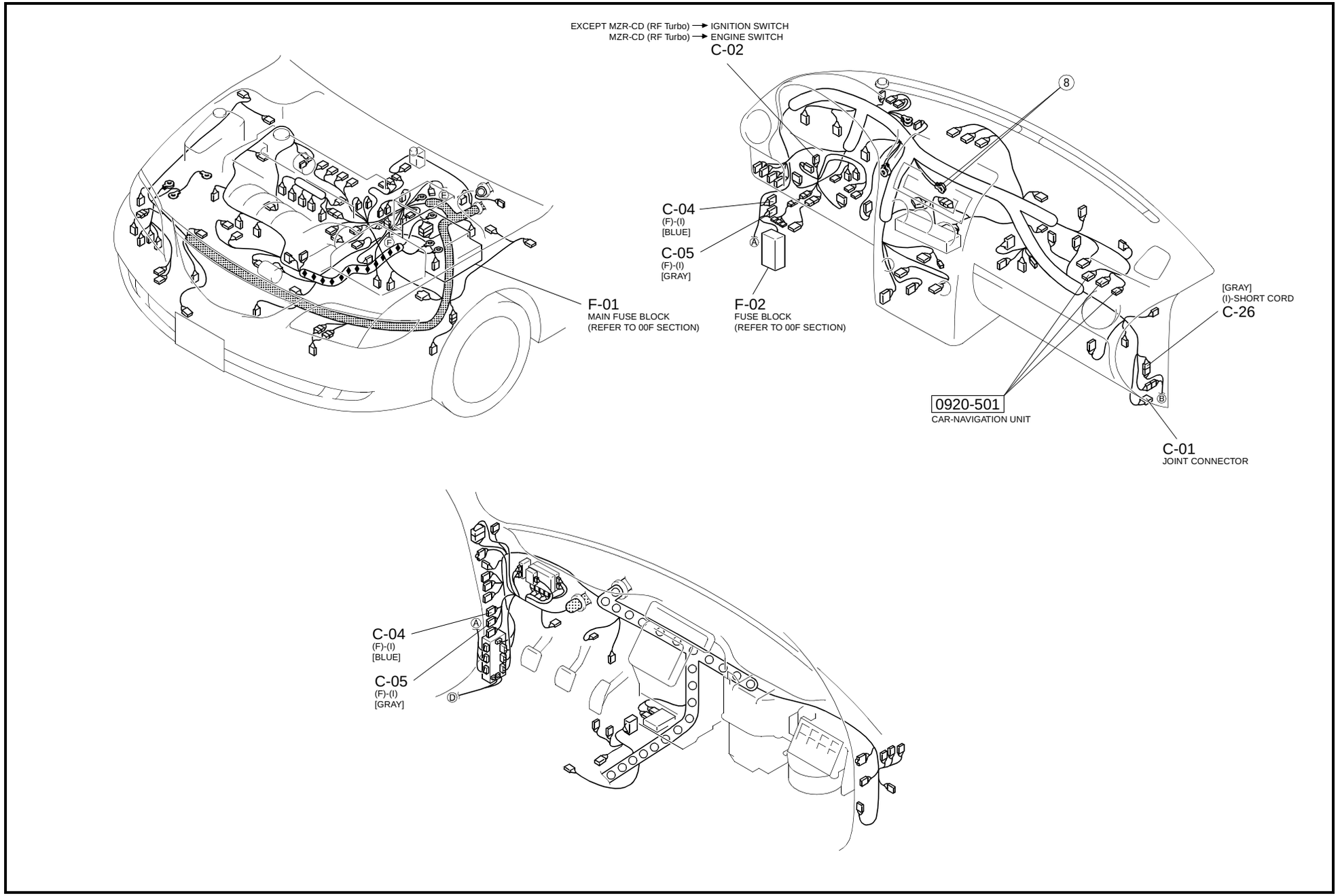

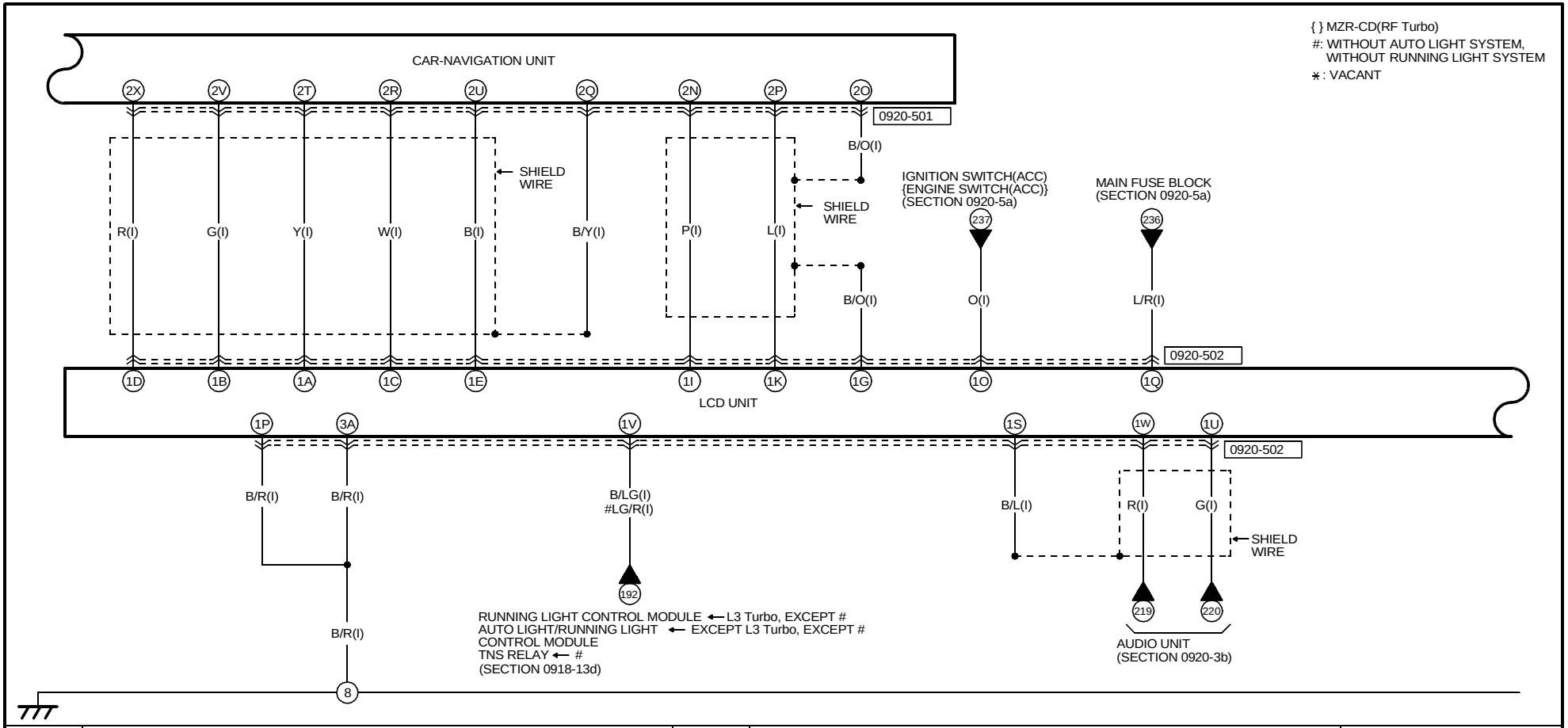

0920-501

CAR-NAVIGATION UNIT(I)

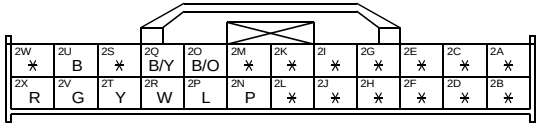

0920-502

LCD UNIT(I)

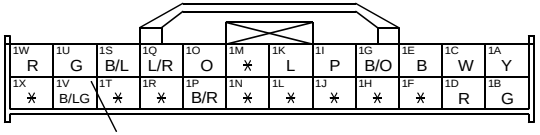

https://www.MyCarManual.com

HARNESS SYMBOL : (F) (E) (D) (R)

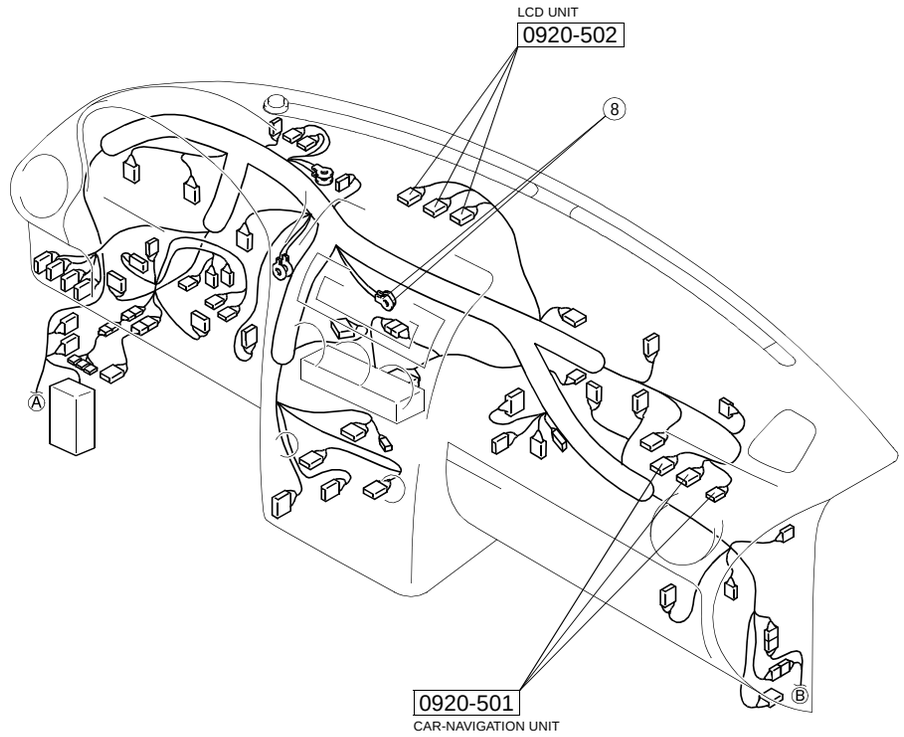

⁎: VACANT

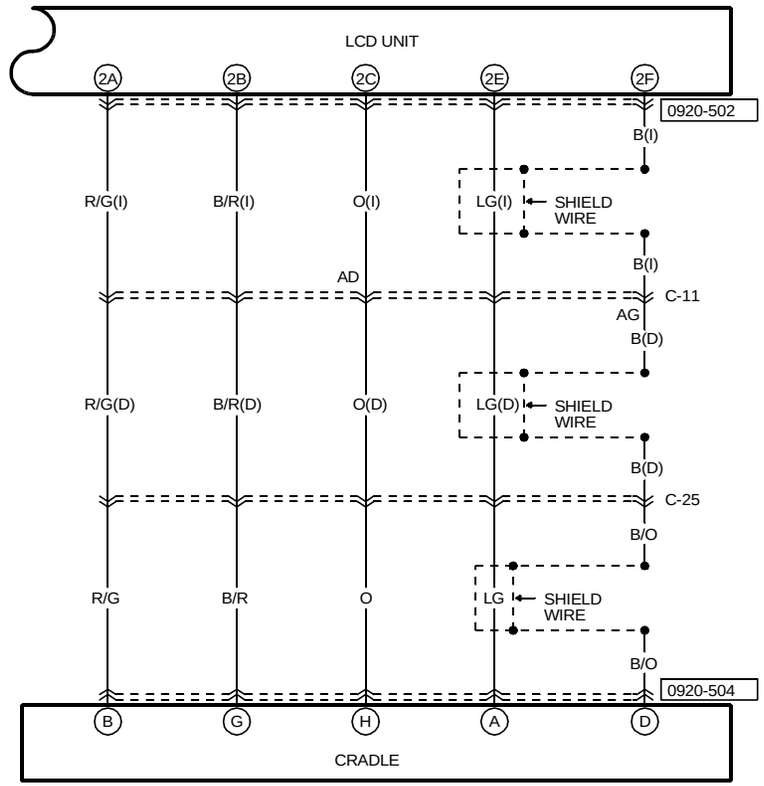

0920-502
LCD UNIT(I)

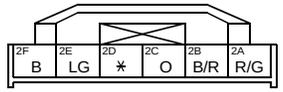

0920-504
CRADLE(SHORT CORD)

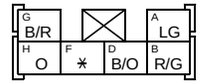

HARNESS SYMBOL : (F) (E) (D) (R)

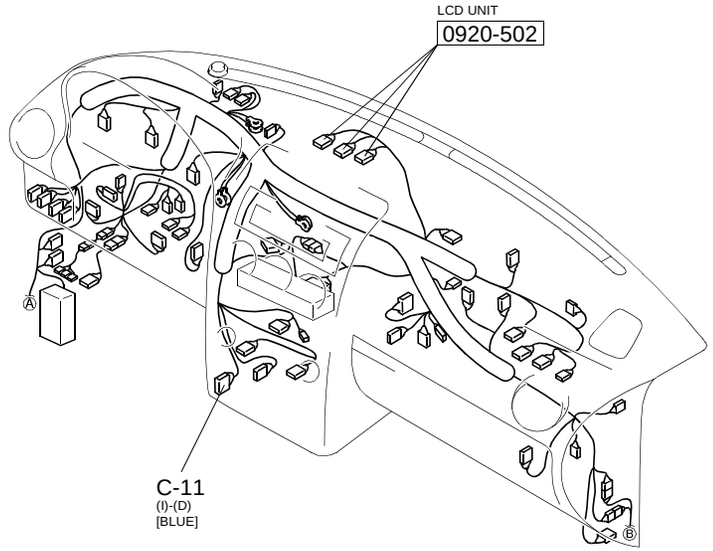

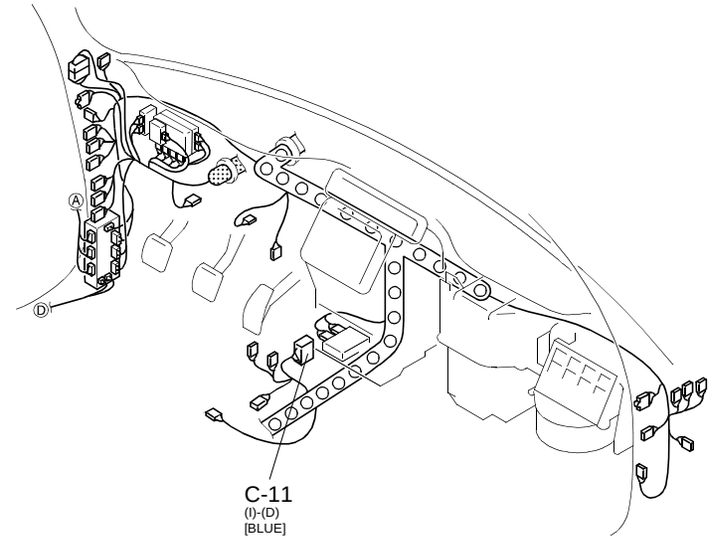

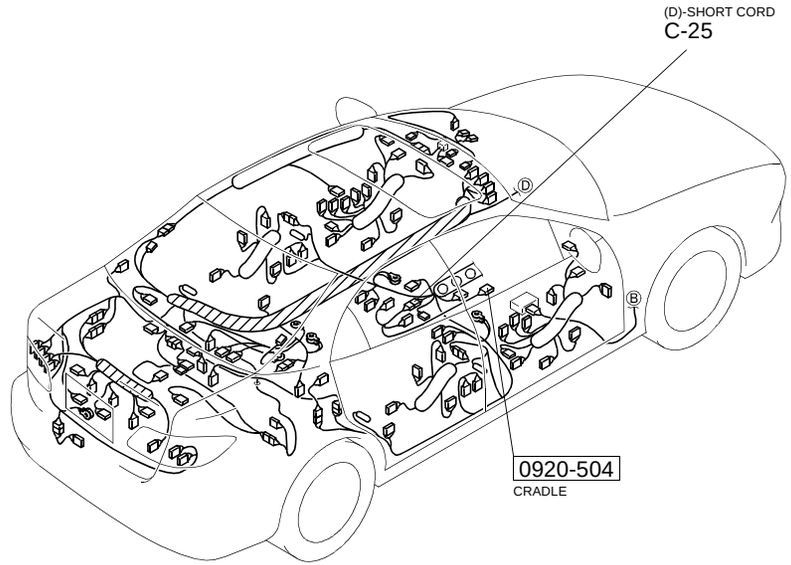

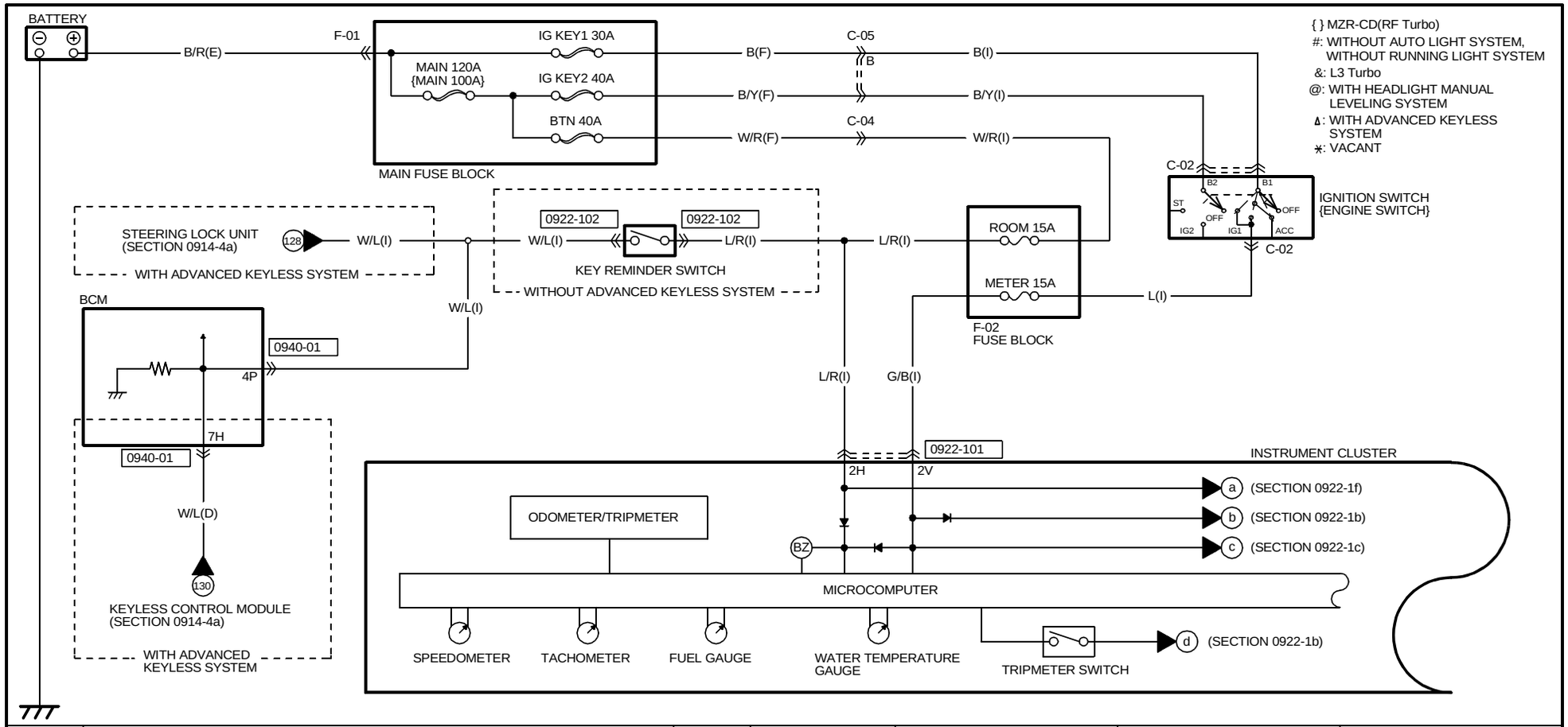

0922-101

INSTRUMENT CLUSTER(I)

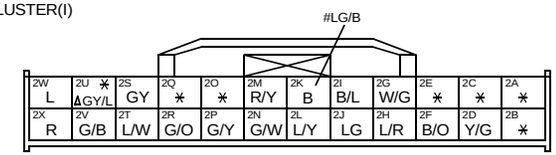

0922-102

KEY REMINDER SWITCH(I)

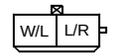

(WITHOUT ADVANCED KEYLESS SYSTEM)

0940-01

BCM

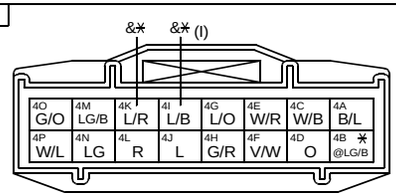

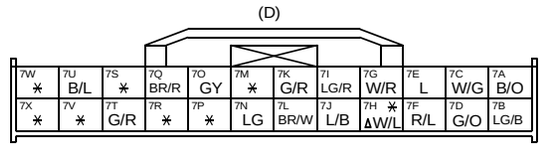

HARNESS SYMBOL : (F) (E) (D) (R)

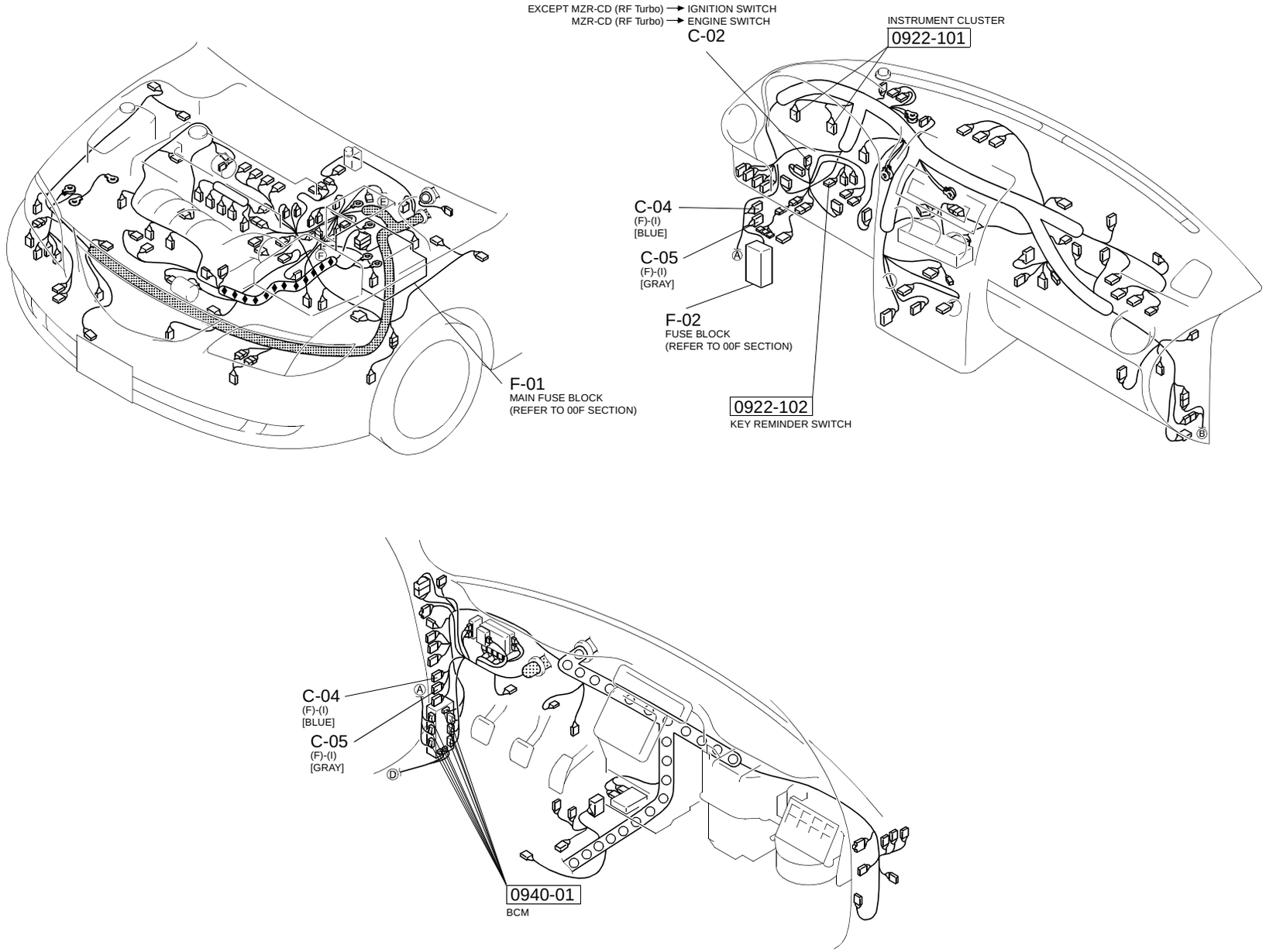

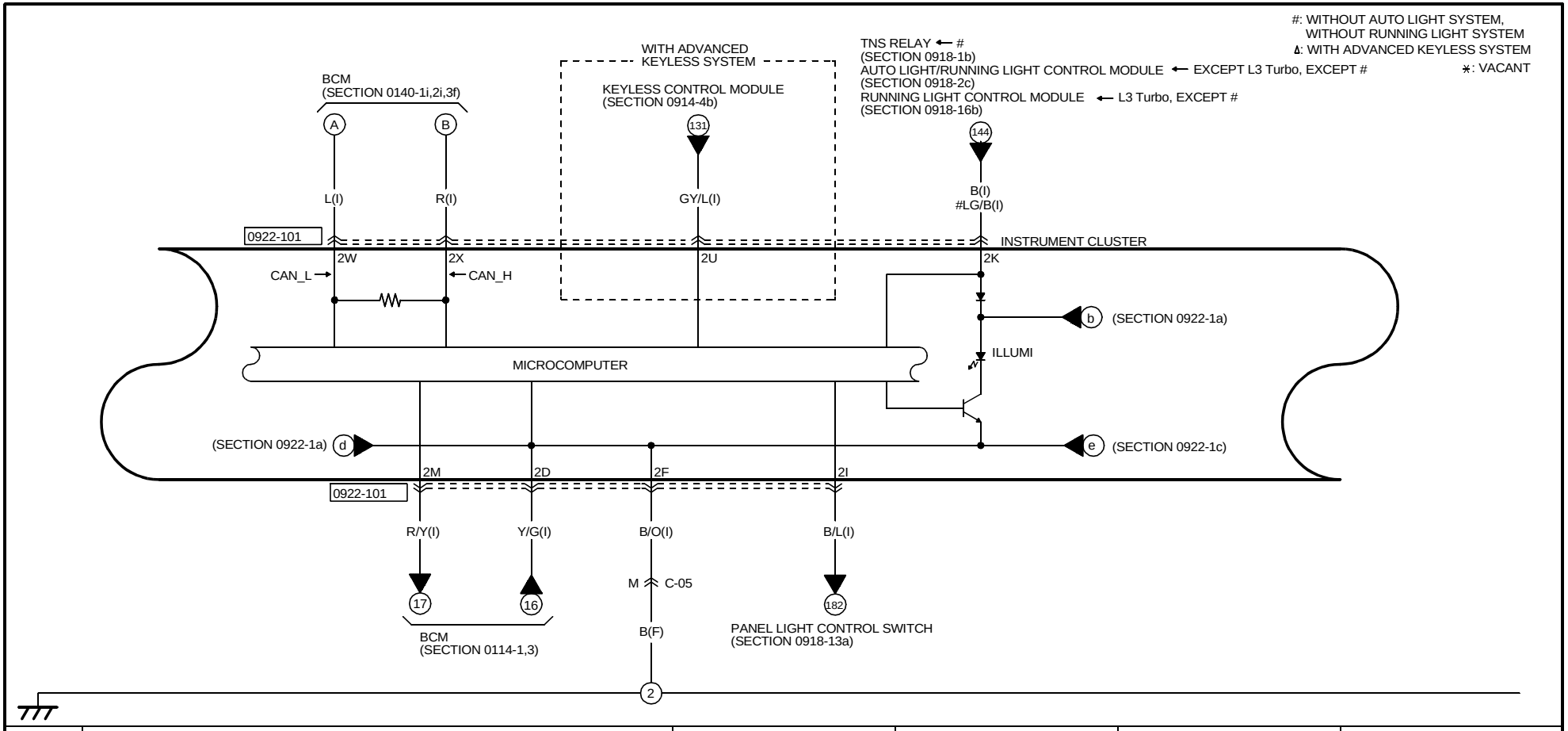

0922-101

INSTRUMENT CLUSTER(I)

#LG/B

2W L	2U ∗ ΔGY/L	2S GY	2Q ∗	2O ∗	2M R/Y	2K B	2I B/L	2G W/G	2E ∗	2C ∗	2A ∗
2X R	2V G/B	2T L/W	2R G/O	2P G/Y	2N G/W	2L L/Y	2J LG	2H L/R	2F B/O	2D Y/G	2B ∗

https://www.MyCarManual.com

HARNESS SYMBOL : (F) (E) (D) (R)

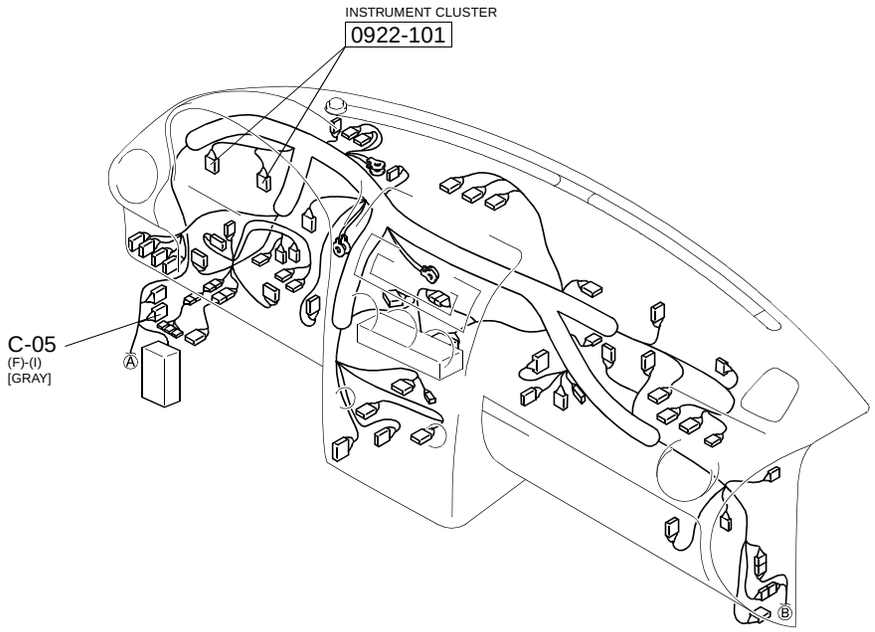

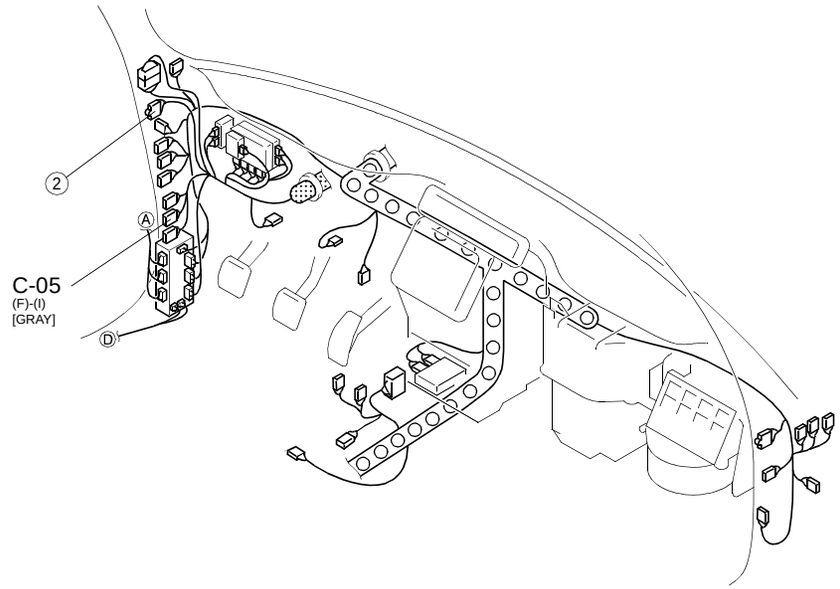

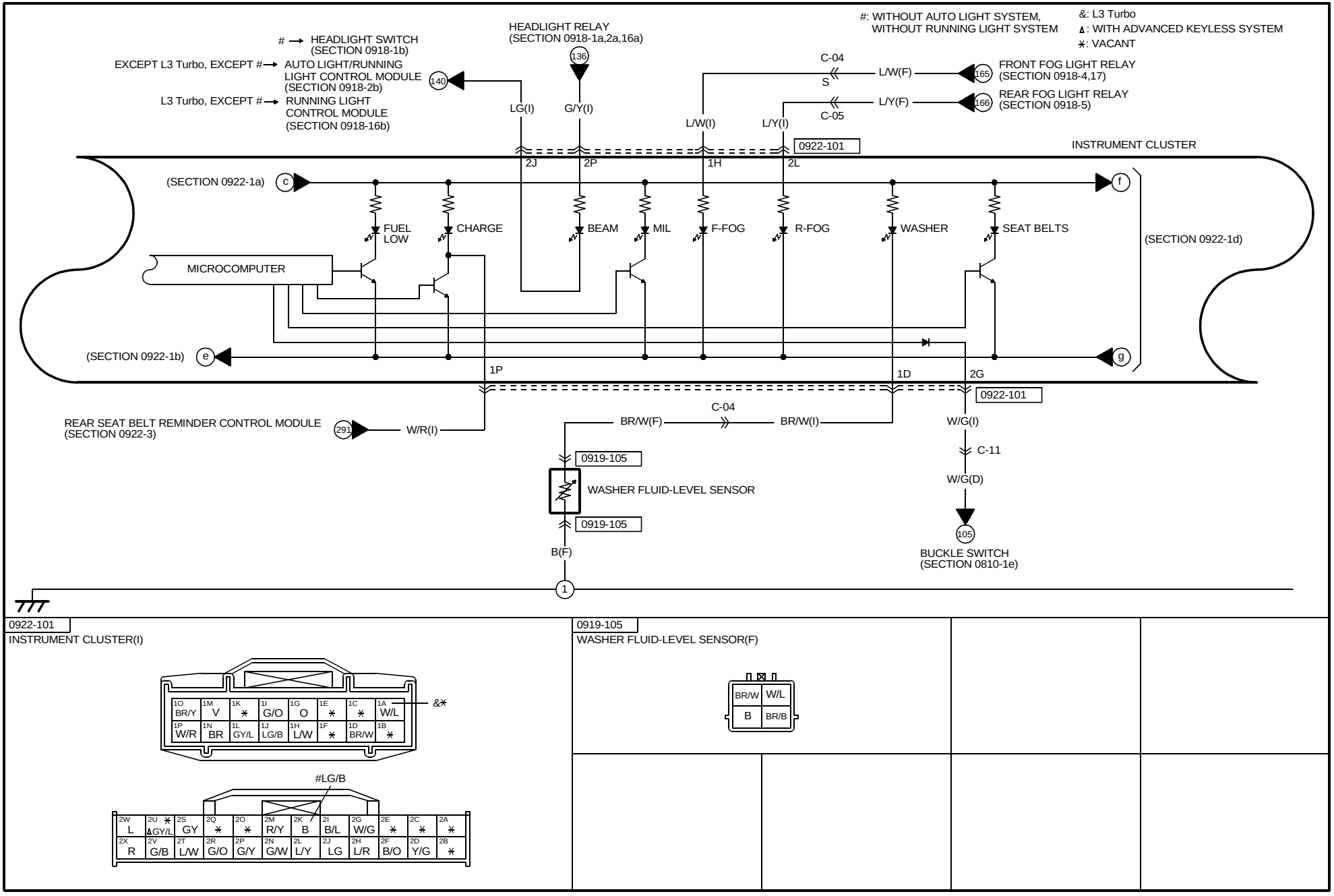

0922-101

INSTRUMENT CLUSTER(I)

0919-105

WASHER FLUID-LEVEL SENSOR(F)

https://www.MyCarManual.com

HARNESS SYMBOL : (F) (E) (D) (R)

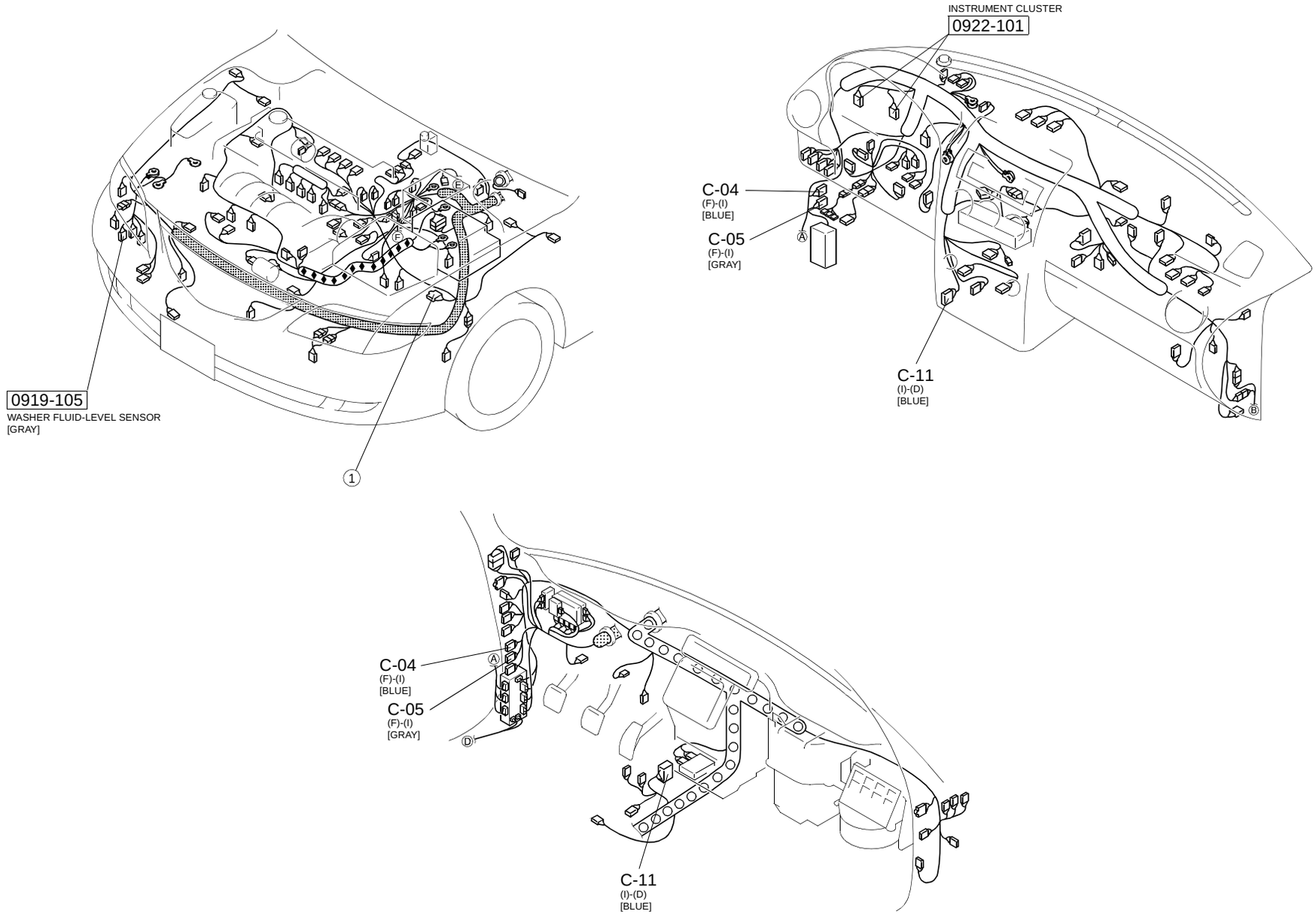

#: WITHOUT AUTO LIGHT SYSTEM, WITHOUT RUNNING LIGHT SYSTEM
∆: WITH ADVANCED KEYLESS SYSTEM
⁎: VACANT

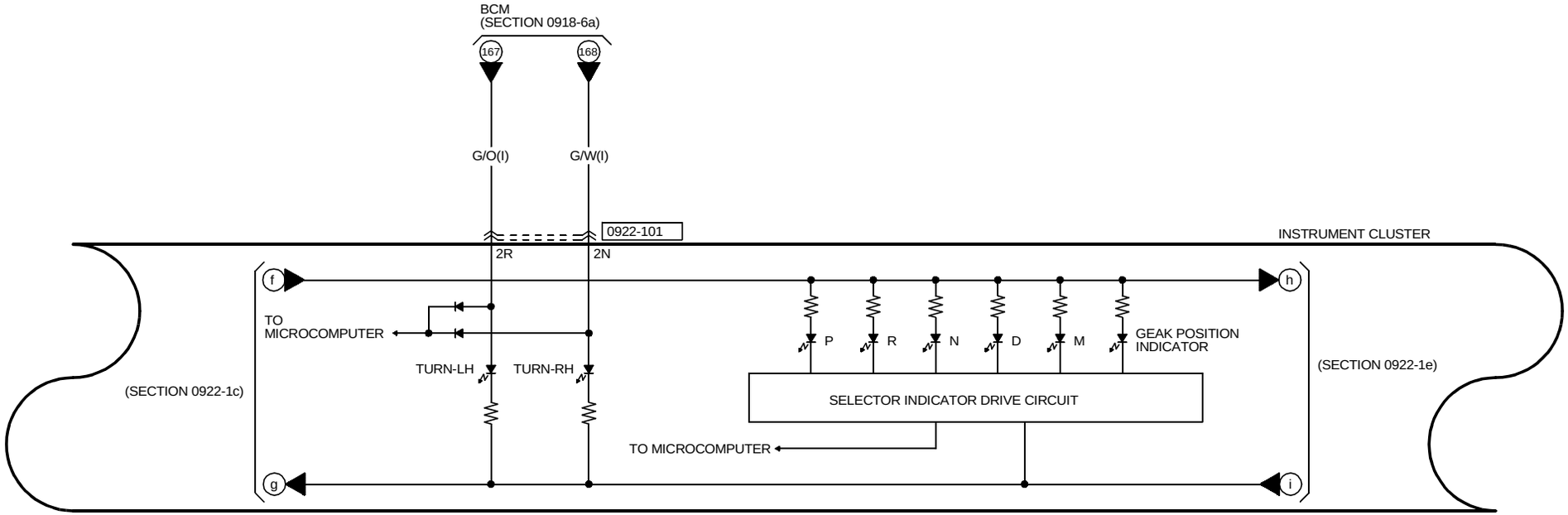

0922-101
INSTRUMENT CLUSTER(I)

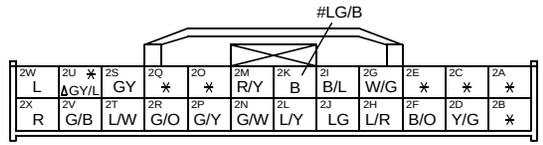

HARNESS SYMBOL : (F) (E) (D) (R)

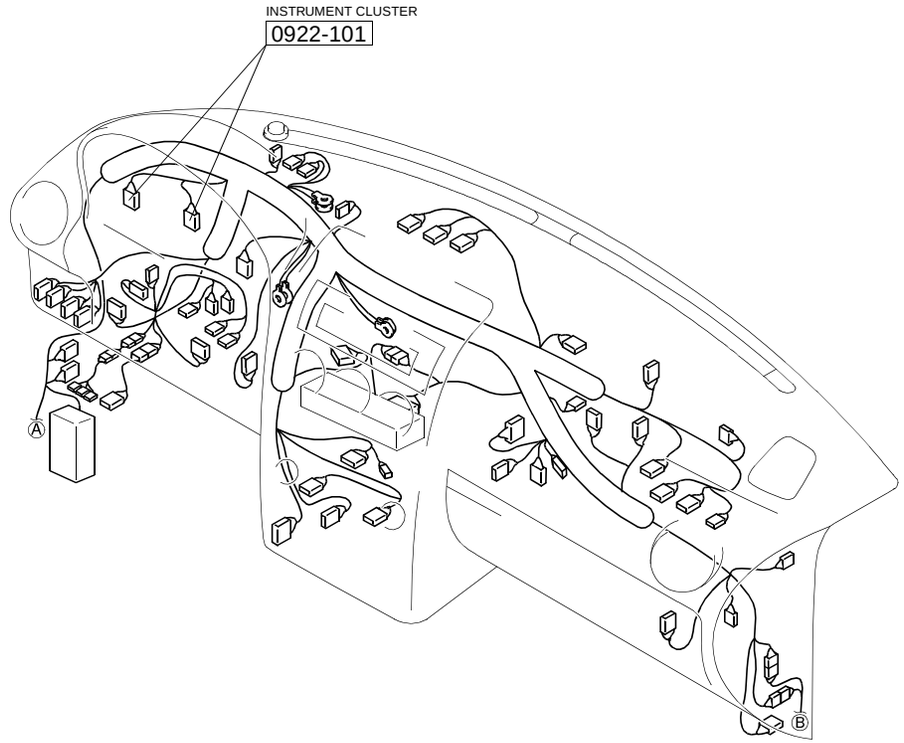

{ } MZR-CD(RF Turbo)
&: L3 Turbo
⁎: VACANT

INSTRUMENT CLUSTER

(SECTION 0922-1d) h

k (SECTION 0922-1g)

DIESEL PARTICULATE FILTER

TCS OFF

BRAKE

ABS

DSC OFF

DSC

CRUISE SET

CRUISE MAIN

TO MICROCOMPUTER

(SECTION 0922-1d) i

j (SECTION 0922-1f)

1L

1N

0922-101

GY/L(I)

BR(I)

C-04

C-11

GY/L(F)

BR(D)

L3 Turbo

0922-106

BRAKE FLUID LEVEL SENSOR

C-03

BR(D)

BR(F)

R

88 4WD CONTROL MODULE (SECTION 0318)

0922-106

BR(D)

B(F)
{B/O(F)}

0922-107

PARKING BRAKE SWITCH

B(F)

2

0922-101
INSTRUMENT CLUSTER(I)

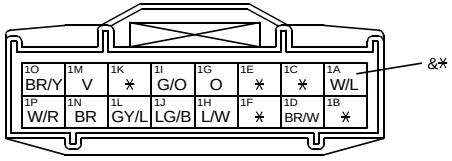

0922-106
BRAKE FLUID LEVEL SENSOR(F)

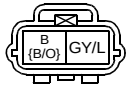

0922-107
PARKING BRAKE SWITCH(D)

https://www.MyCarManual.com

HARNESS SYMBOL : (F) (E) (D) (R)

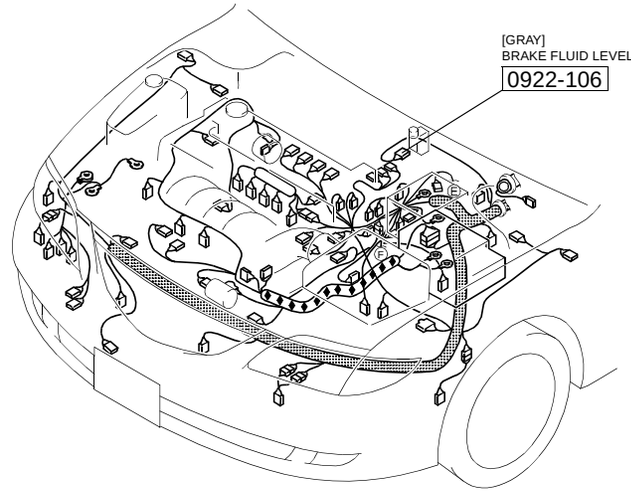

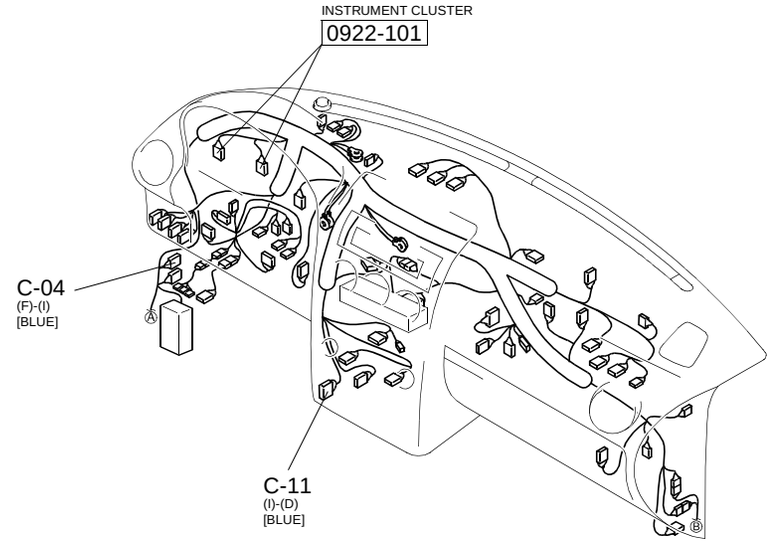

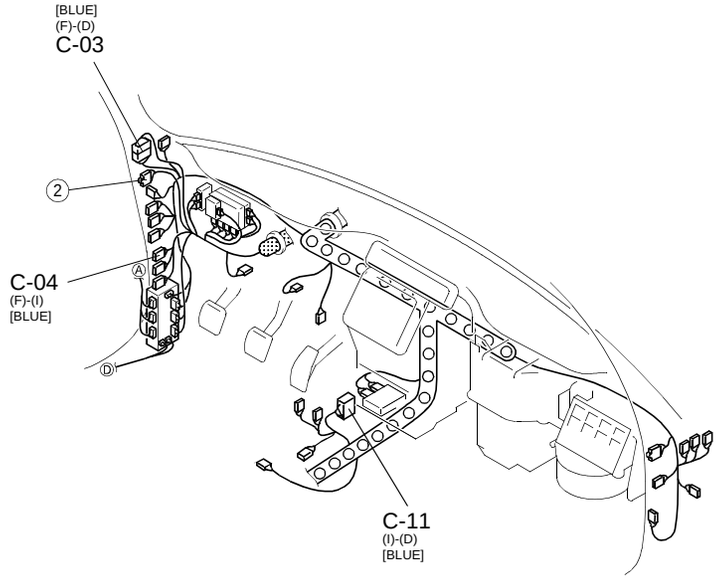

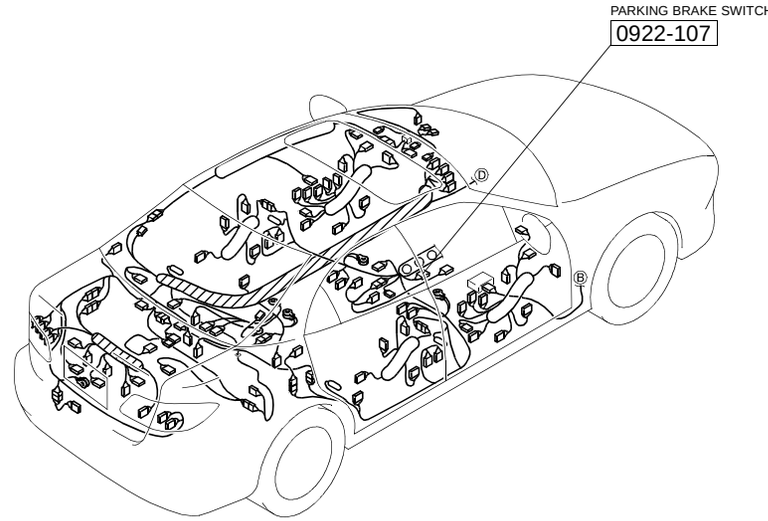

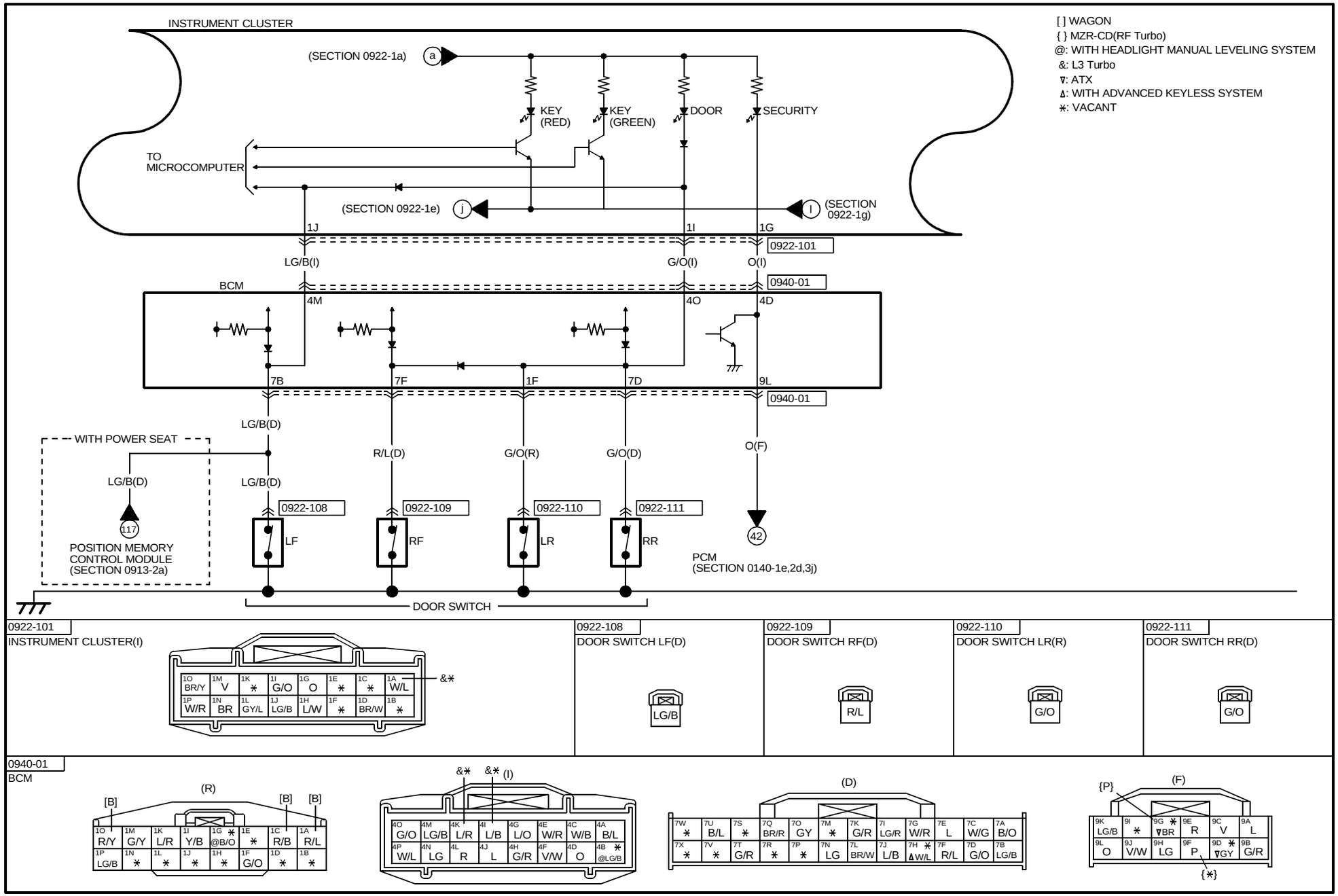
INSTRUMENT CLUSTER
[ ] WAGON
{ } MZR-CD(RF Turbo)
@: WITH HEADLIGHT MANUAL LEVELING SYSTEM
&: L3 Turbo
▽: ATX
△: WITH ADVANCED KEYLESS SYSTEM
✳: VACANT
(SECTION 0922-1a)
a
KEY (RED)
KEY (GREEN)
DOOR
SECURITY
TO MICROCOMPUTER
(SECTION 0922-1e)
j
l
(SECTION 0922-1g)
1J
1I
1G
0922-101
LG/B(I)
G/O(I)
O(I)
BCM
0940-01
4M
4O
4D
7B
7F
1F
7D
9L
0940-01
LG/B(D)
WITH POWER SEAT
R/L(D)
G/O(R)
G/O(D)
O(F)
LG/B(D)
LG/B(D)
117
POSITION MEMORY CONTROL MODULE (SECTION 0913-2a)
0922-108
0922-109
0922-110
0922-111
LF
RF
LR
RR
42
PCM (SECTION 0140-1e,2d,3j)
DOOR SWITCH
0922-101
INSTRUMENT CLUSTER(I)
1O BR/Y
1M V
1K ✳
1I G/O
1G O
1E ✳
1C ✳
1A W/L
&✳
1P W/R
1N BR
1L GY/L
1J LG/B
1H L/W
1F ✳
1D BR/W
1B ✳
0922-108
DOOR SWITCH LF(D)
LG/B
0922-109
DOOR SWITCH RF(D)
R/L
0922-110
DOOR SWITCH LR(R)
G/O
0922-111
DOOR SWITCH RR(D)
G/O
0940-01
BCM
(R)
[B]
[B]
[B]
1O R/Y
1M G/Y
1K L/R
1I Y/B
1G ✳ @B/O
1E ✳
1C R/B
1A R/L
1P LG/B
1N ✳
1L ✳
1J ✳
1H ✳
1F G/O
1D ✳
1B ✳
&✳
&✳ (I)
4O G/O
4M LG/B
4K L/R
4I L/B
4G L/O
4E W/R
4C W/B
4A B/L
4P W/L
4N LG
4L R
4J L
4H G/R
4F V/W
4D O
4B ✳ @LG/B
(D)
7W ✳
7U B/L
7S ✳
7Q BR/R
7O GY
7M ✳
7K G/R
7I LG/R
7G W/R
7E L
7C W/G
7A B/O
7X ✳
7V ✳
7T G/R
7R ✳
7P ✳
7N LG
7L BR/W
7J L/B
7H ✳ △W/L
7F R/L
7D G/O
7B LG/B
(F)
{P}
9K LG/B
9I ✳
9G ✳ ▽BR
9E R
9C V
9A L
9L O
9J V/W
9H LG
9F P
9D ✳ ▽GY
9B G/R
{✳}

HARNESS SYMBOL : (F) (E) (D) (R)

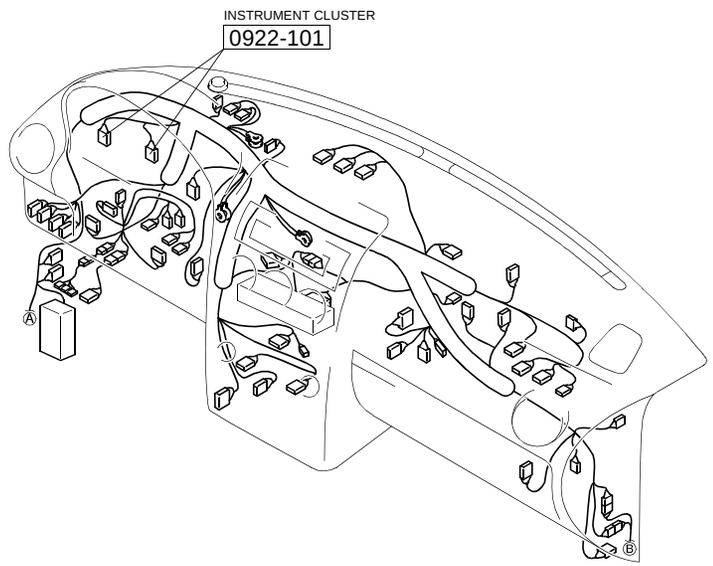

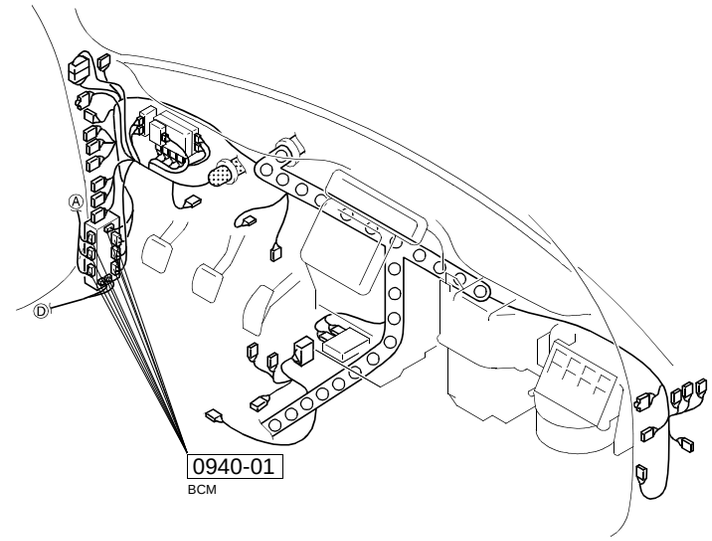

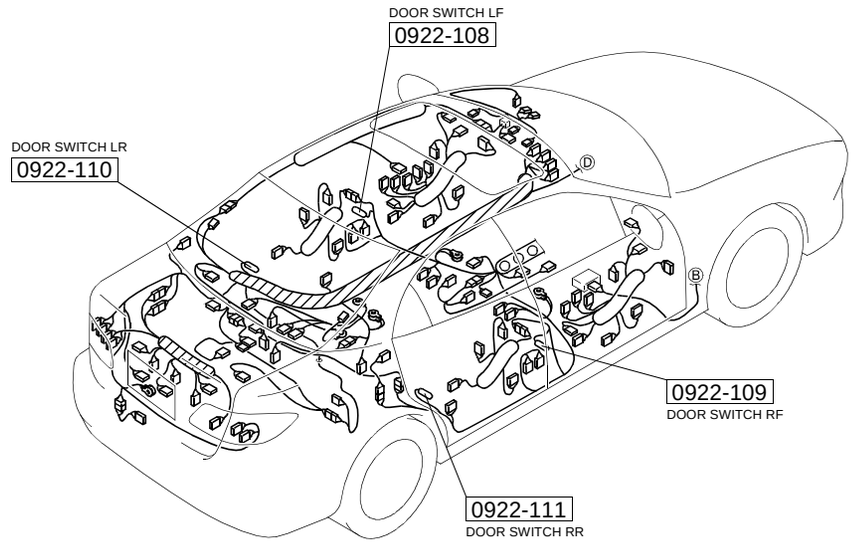

#: WITHOUT AUTO LIGHT SYSTEM, WITHOUT RUNNING LIGHT SYSTEM
&: L3 Turbo
∆: WITH ADVANCED KEYLESS SYSTEM
✳: VACANT

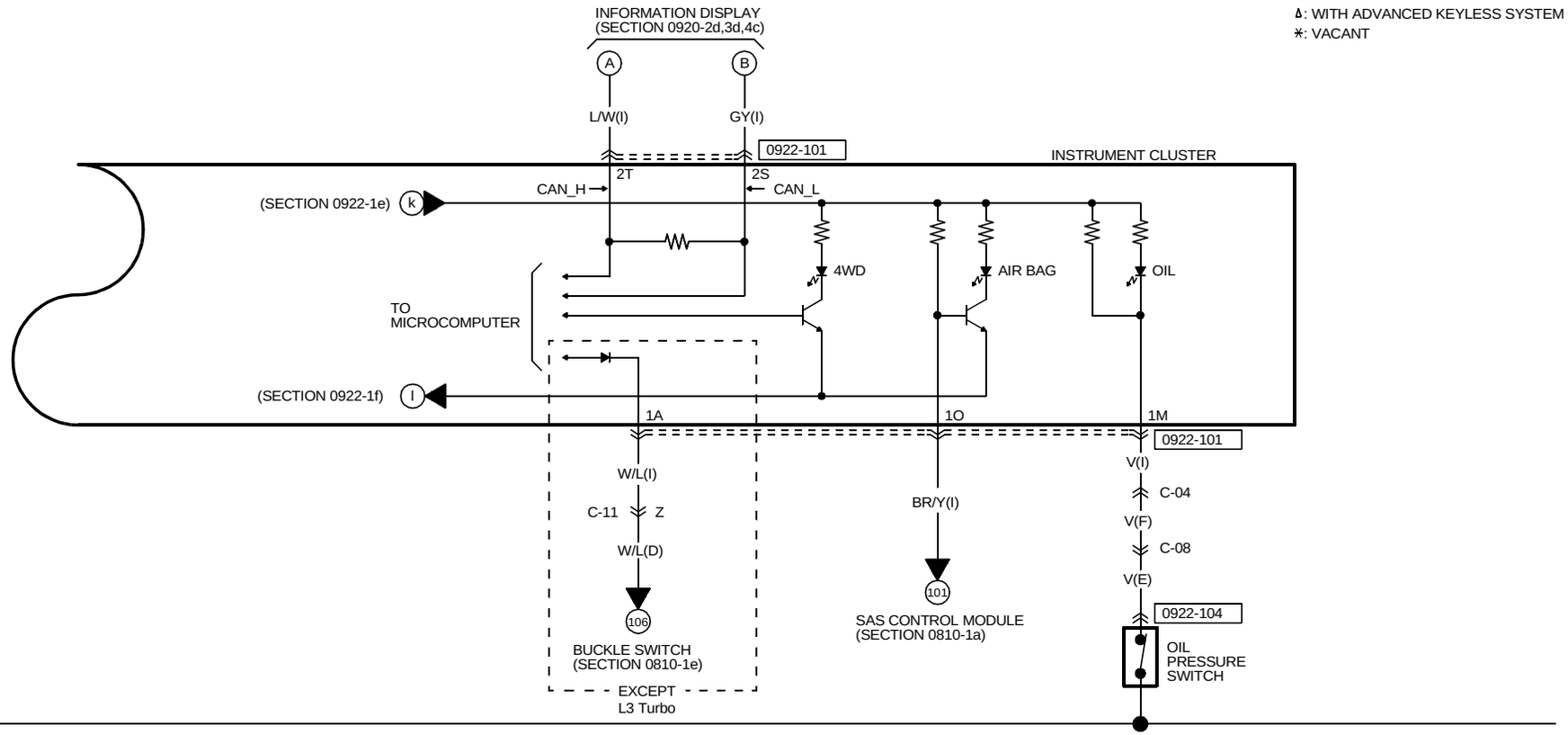

0922-101

INSTRUMENT CLUSTER(I)

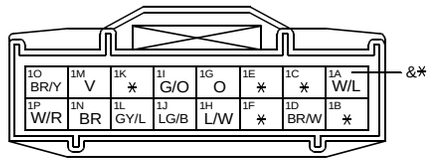

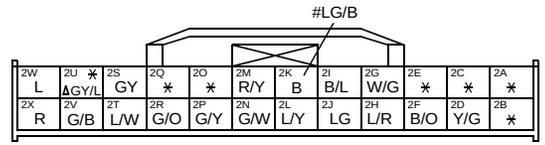

0922-104

OIL PRESSURE SWITCH(E)

(EXCEPT
MZR-CD(RF Turbo))

(MZR-CD(RF Turbo))

HARNESS SYMBOL : (F) (E) (D) (R)

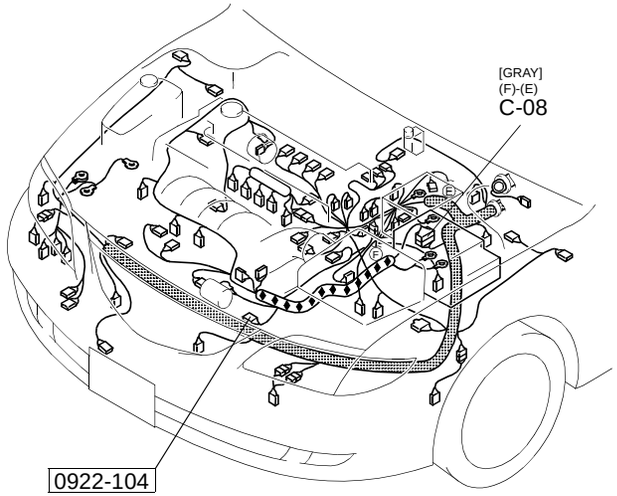

[EXCEPT MZR-CD (RF Turbo)]

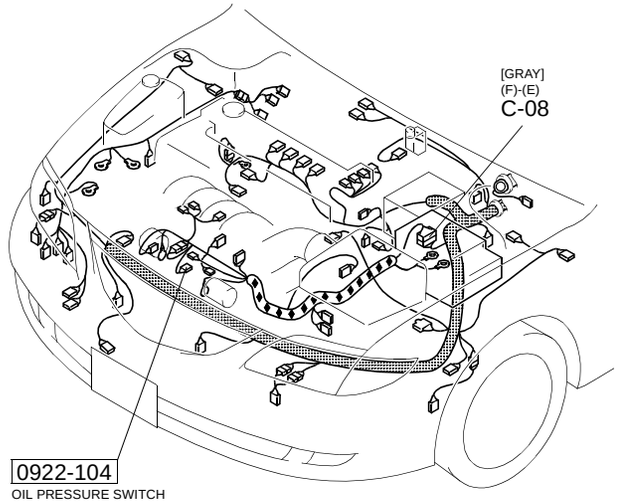

[MZR-CD (RF Turbo)]

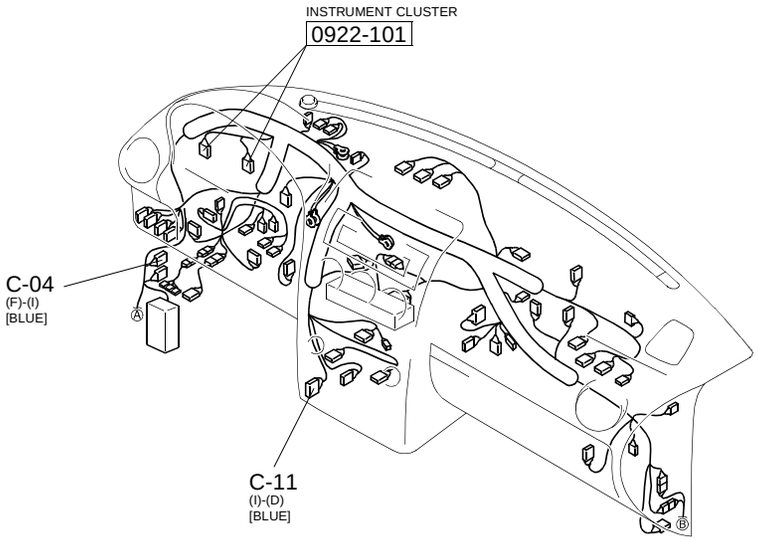

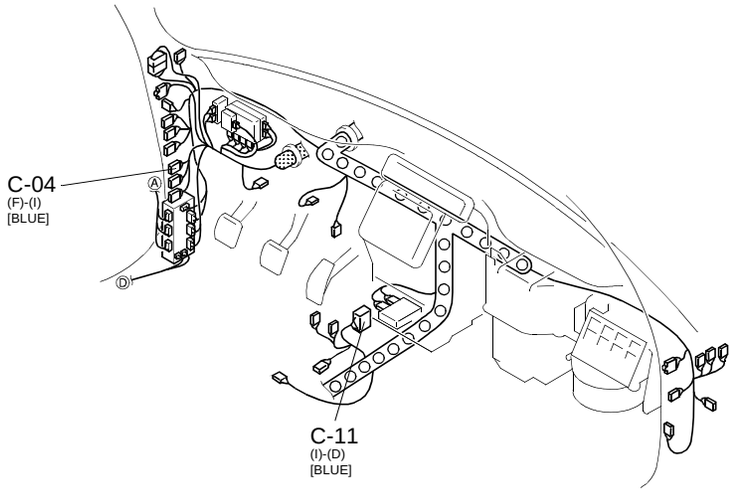

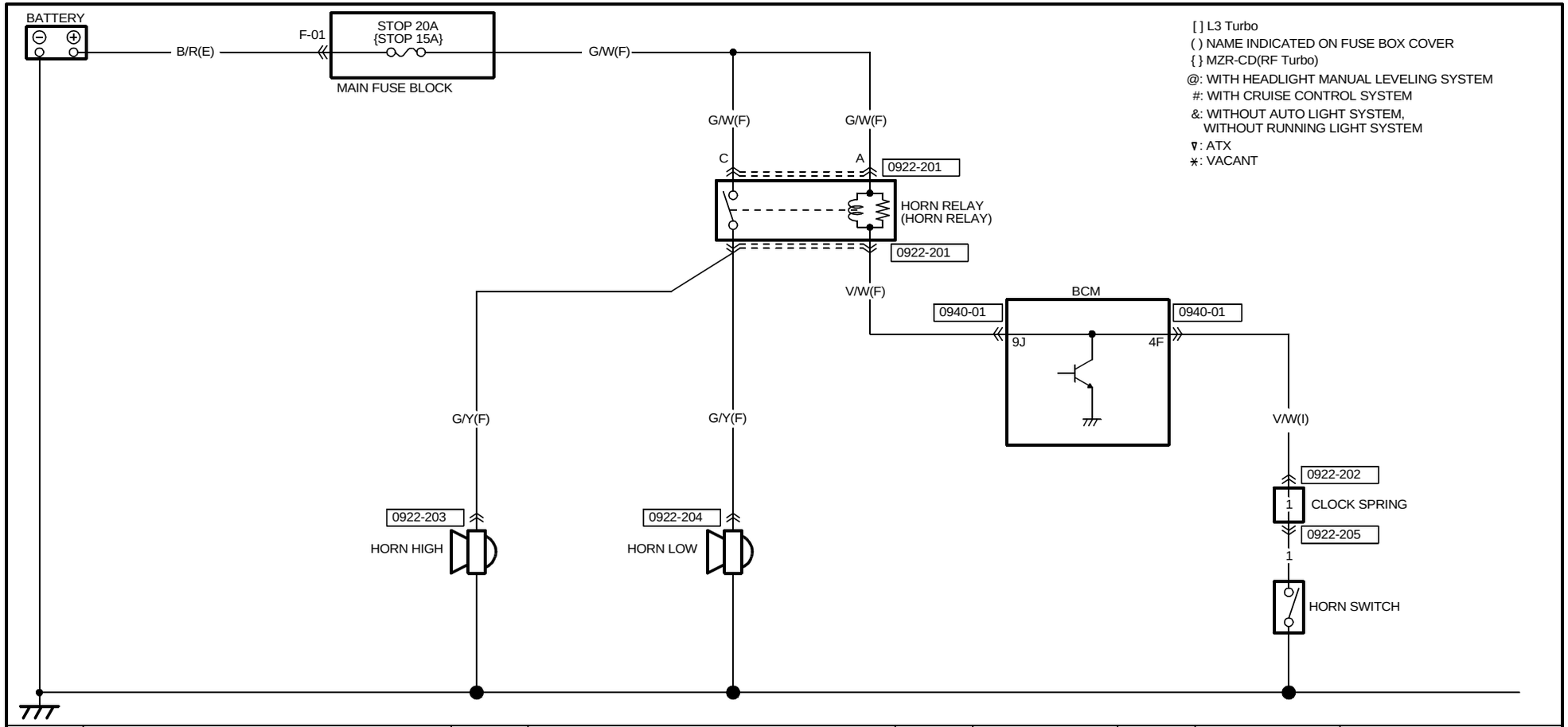

0922-201
HORN RELAY(F)

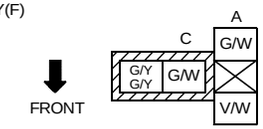

NOTE:SEEN FROM TERMINAL SIDE

0922-202
CLOCK SPRING(I)

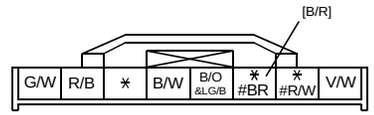

0922-203
HORN HIGH(F)

0922-204
HORN LOW(F)

0922-205
HORN SWITCH(CLOCK SPRING)

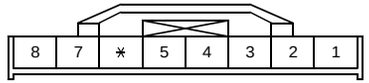

TERMINALS OF THIS CONNECTOR
ARE INDICATED BY NUMBERS.

0940-01
BCM

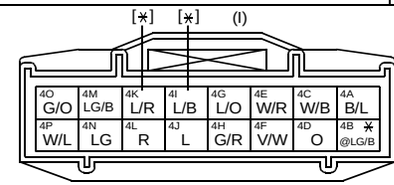

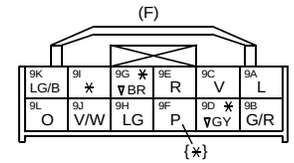

HARNESS SYMBOL : (F) (E) (D) (R)

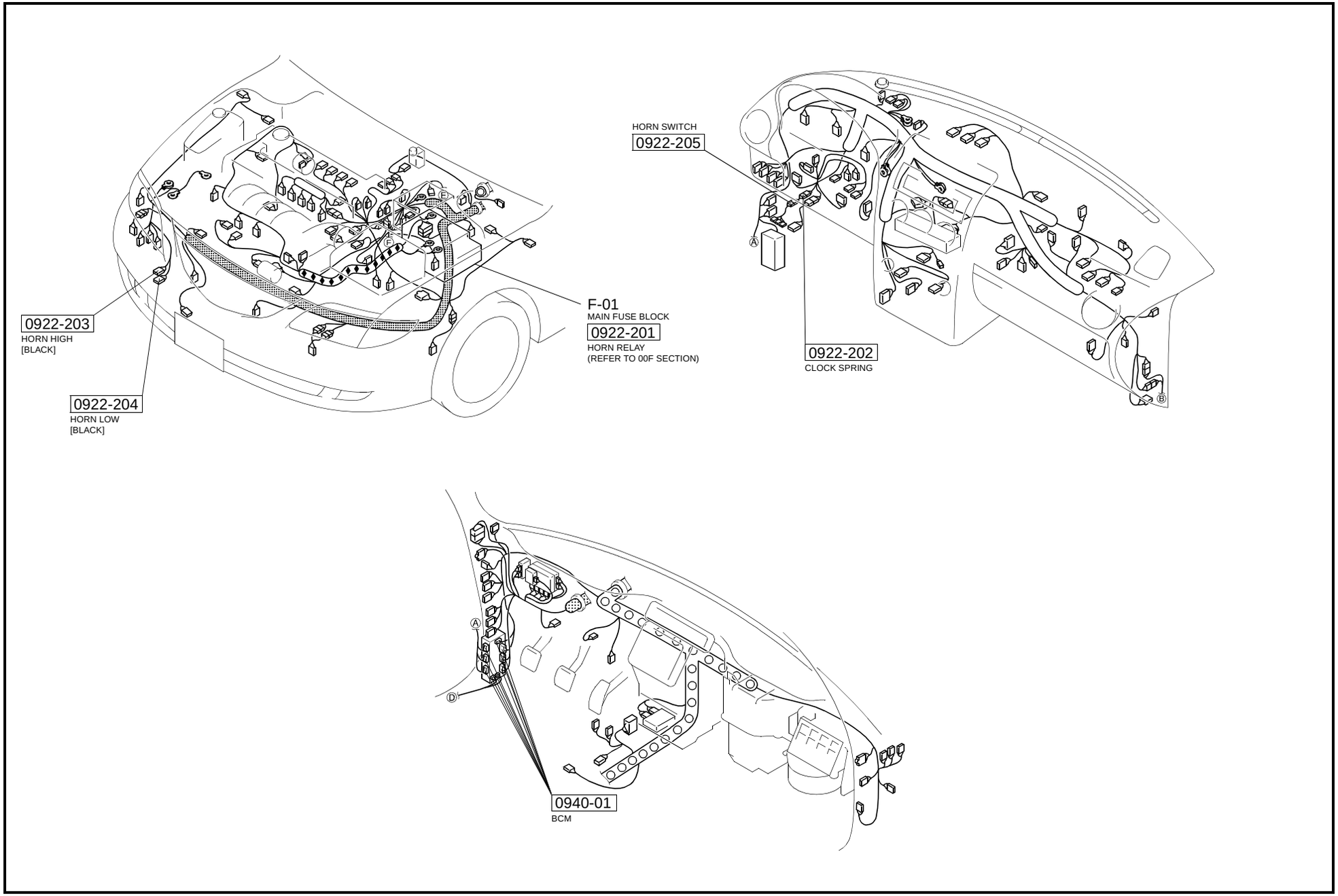

REAR SEAT BELT REMINDER SYSTEM

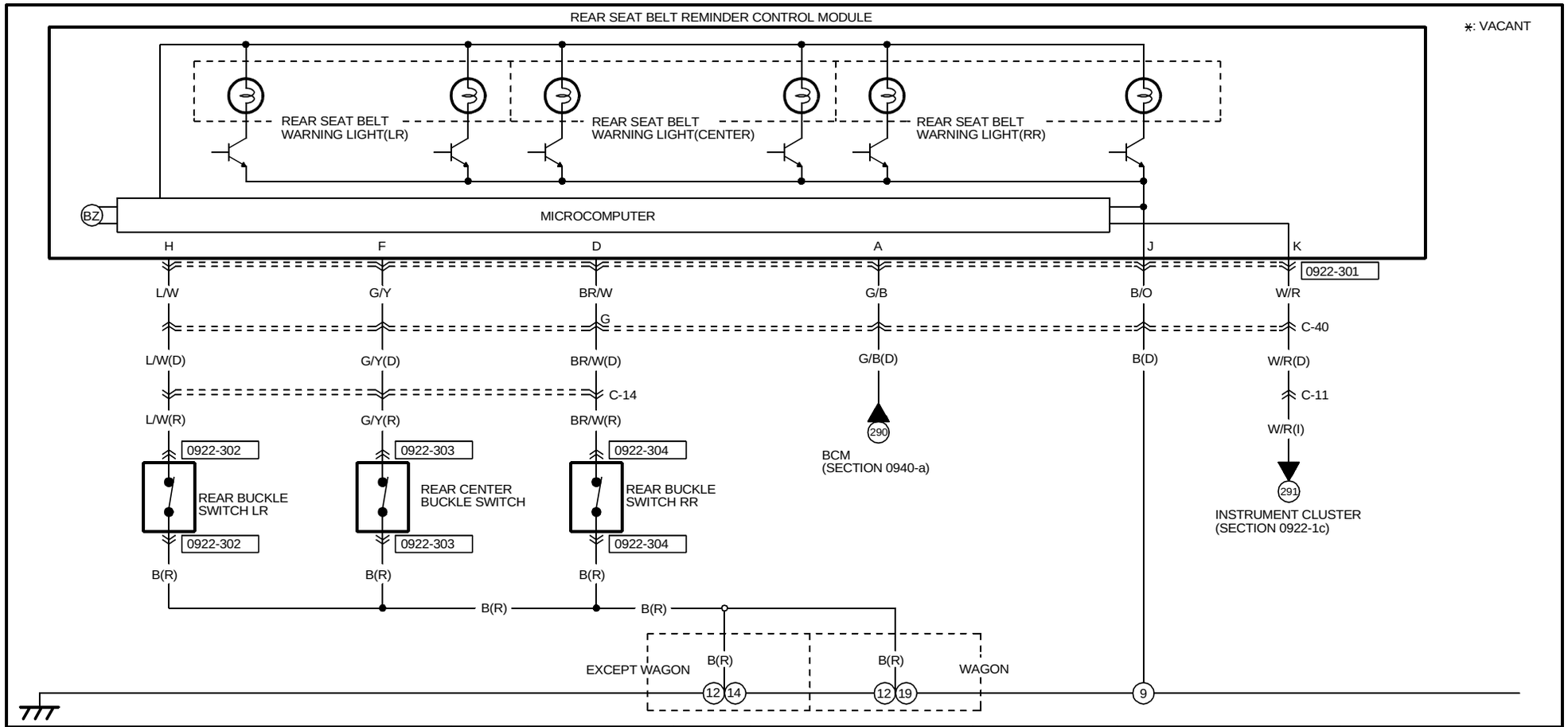

0922-301	0922-302	0922-303	0922-304		
REAR SEAT BELT REMINDER CONTROL MODULE (SHORT CORD)	REAR BUCKLE SWITCH LR(R)	REAR CENTER BUCKLE SWITCH(R)	REAR BUCKLE SWITCH RR(R)		
K W/R, I *, G *, E *, C *, A G/B; L *, J B/O, H L/W, F G/Y, D BR/W, B *	L/W, B	G/Y, B	*, *, BR/W, B		

HARNESS SYMBOL : (F) (E) (D) (R)

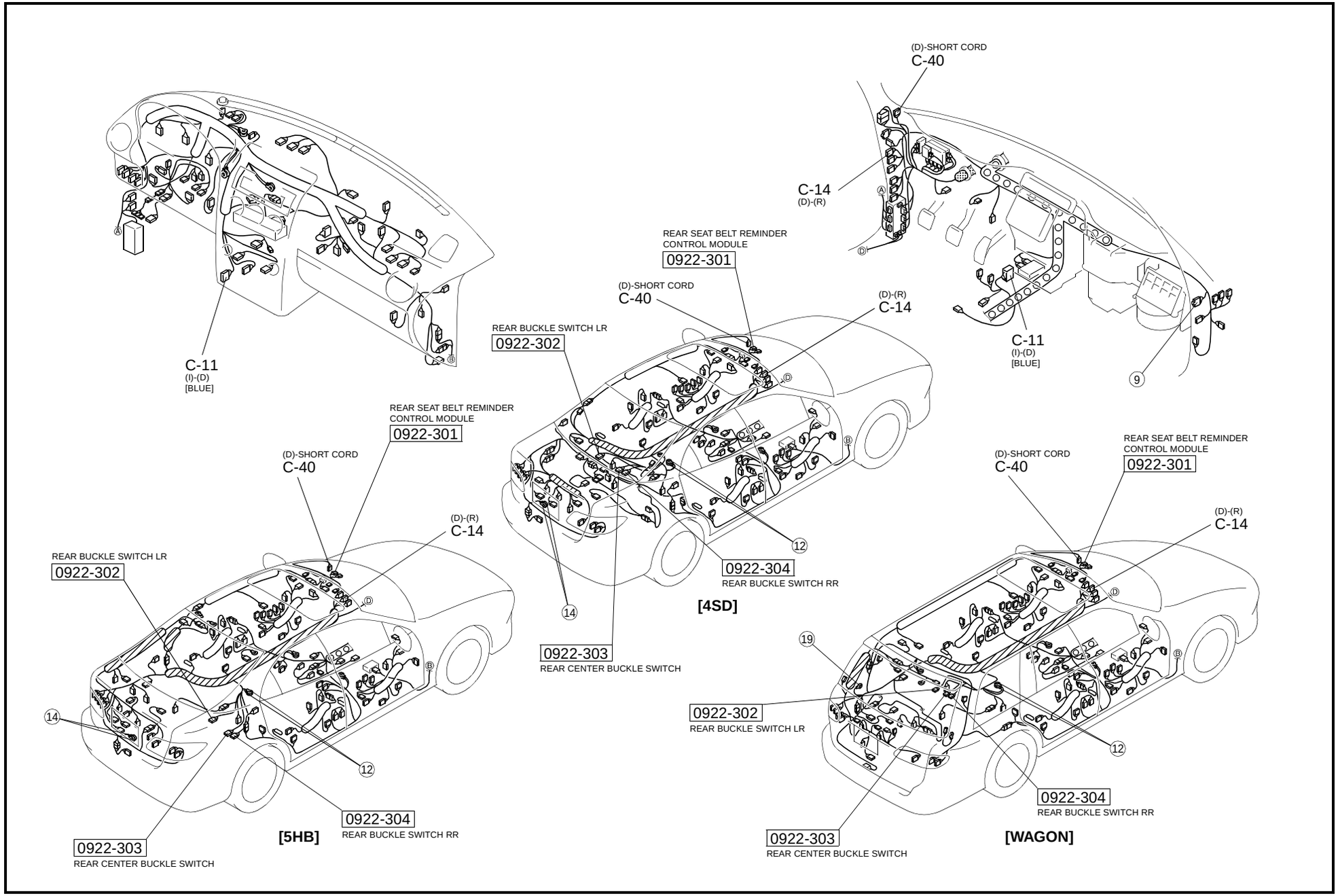

BCM (BODY CONTROL MODULE)

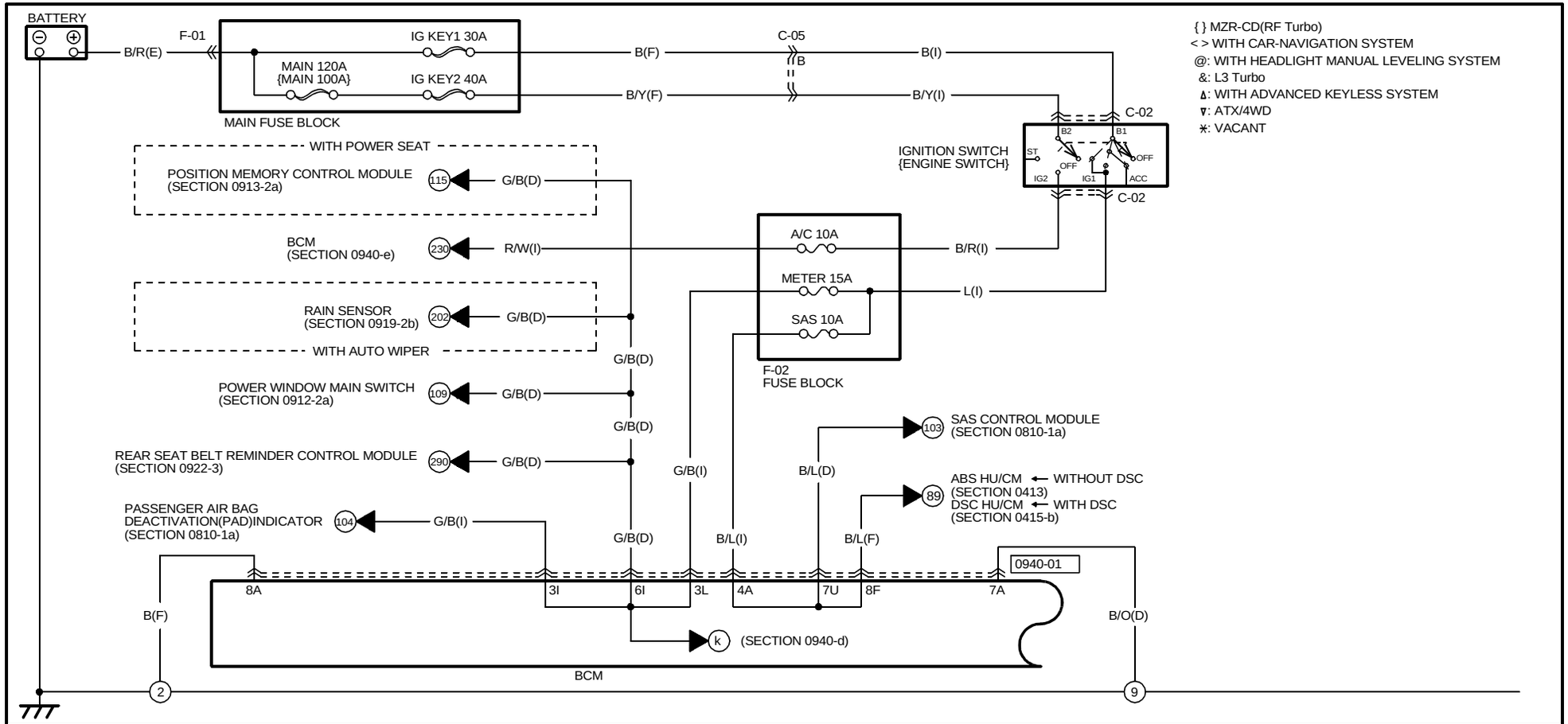

0940-01
BCM

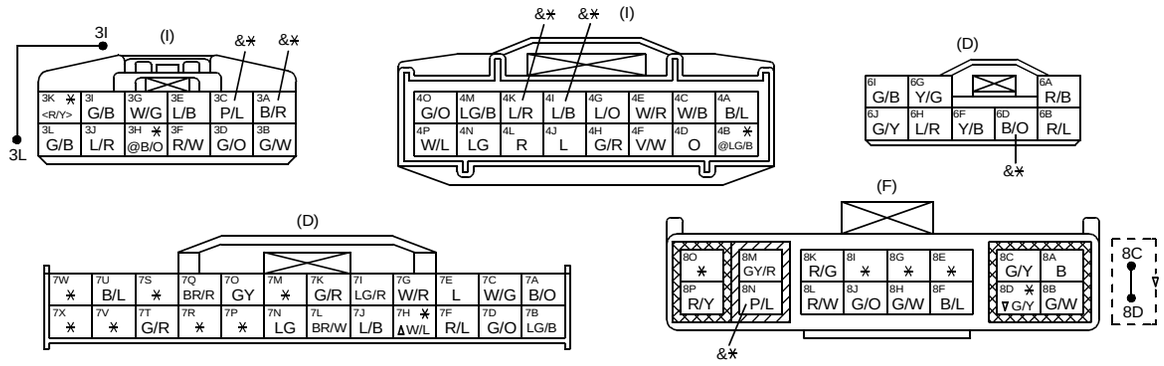

HARNESS SYMBOL : (F) (E) (D) (R)

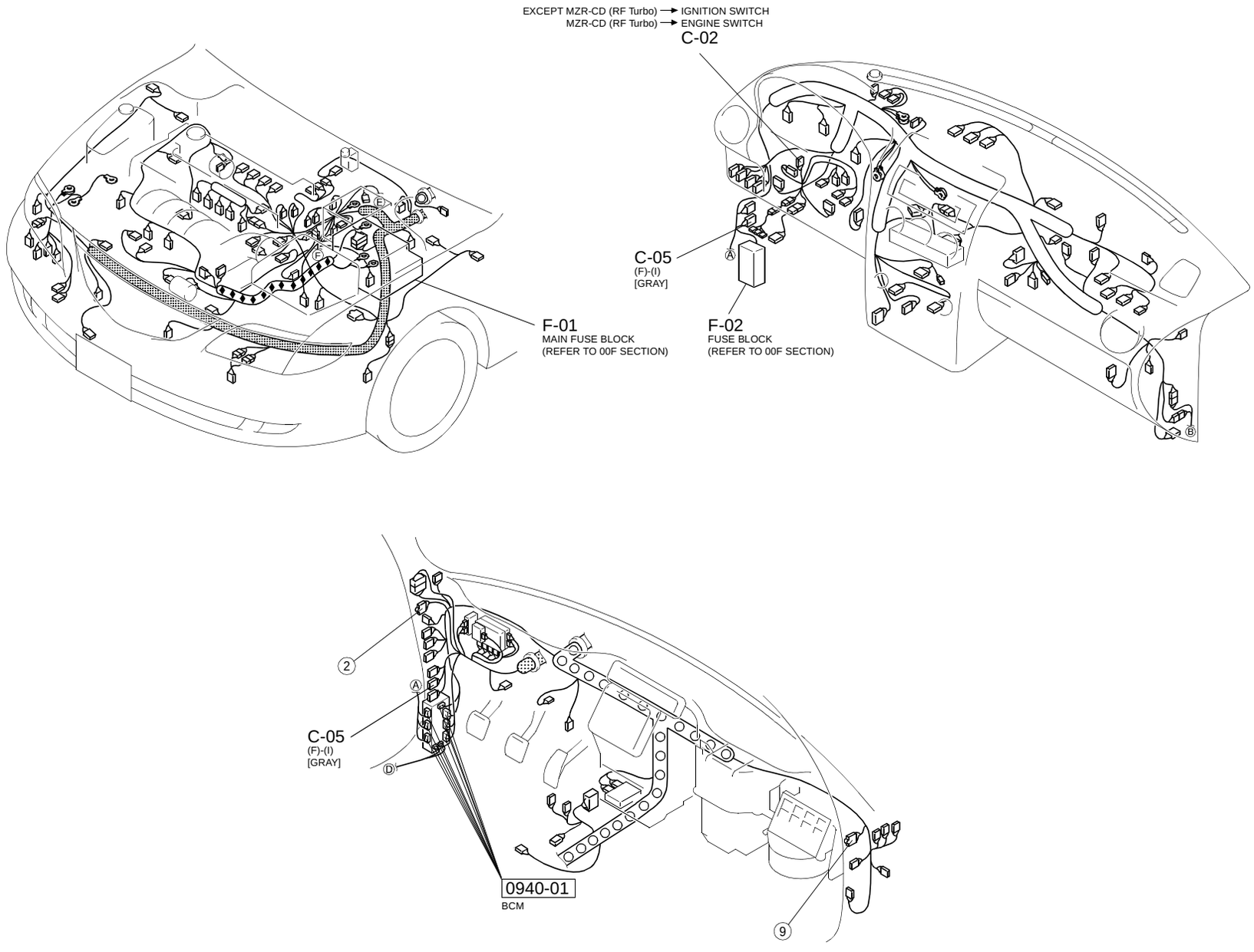

BCM (BODY CONTROL MODULE)

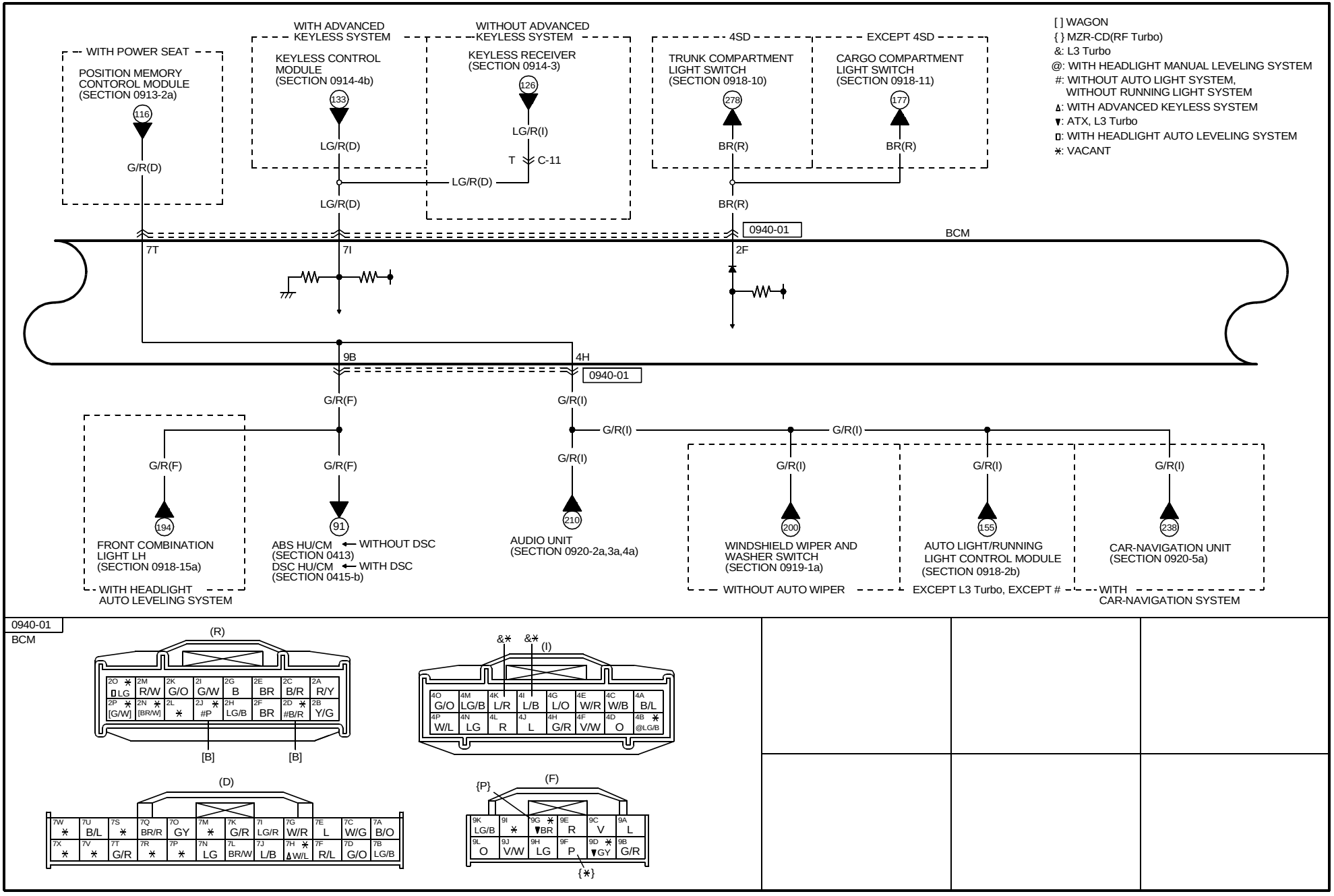

https://www.MyCarManual.com

HARNESS SYMBOL : (F) (E) (D) (R)

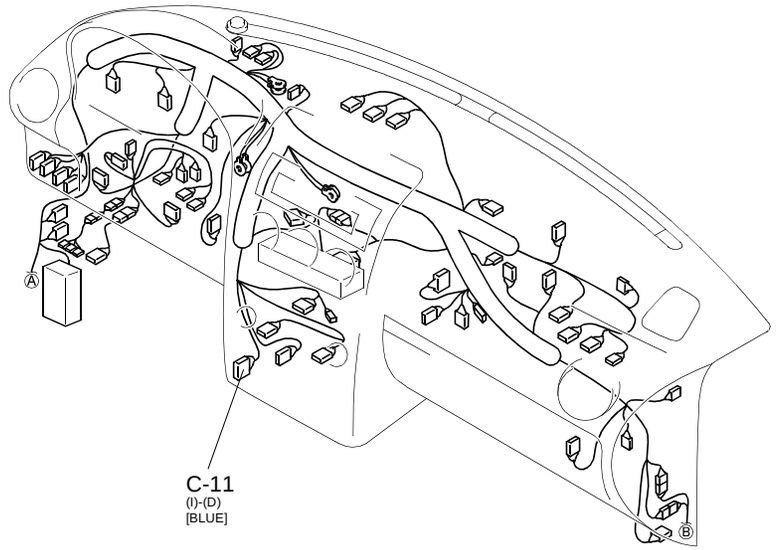

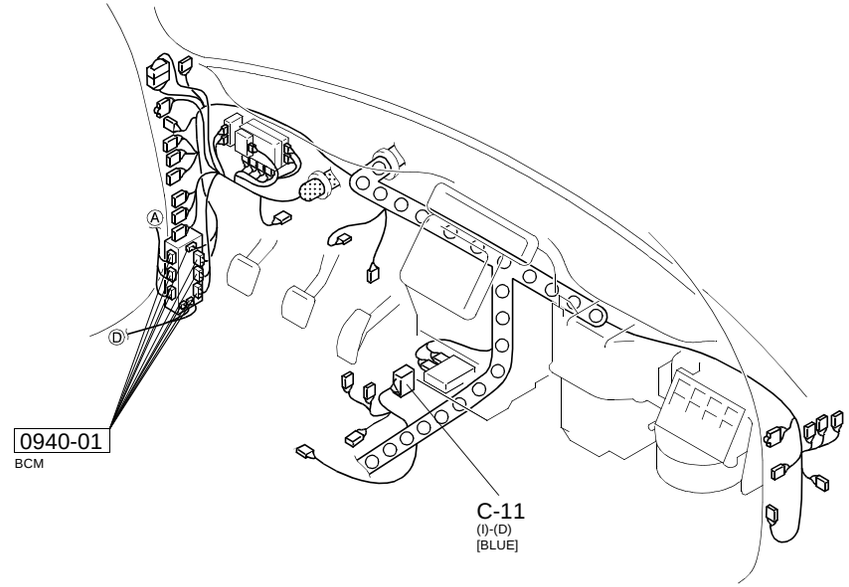

BCM (BODY CONTROL MODULE)

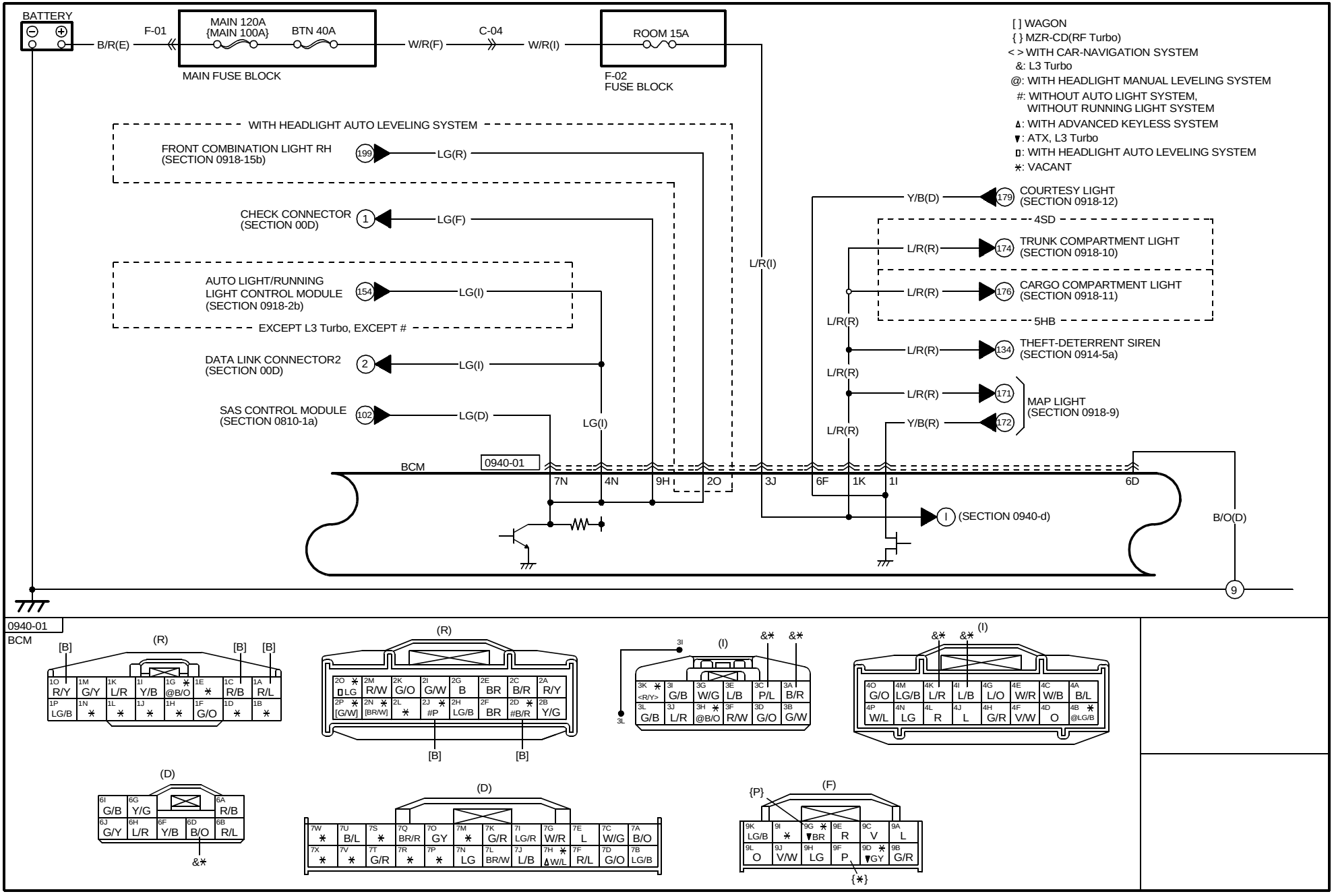

https://www.MyCarManual.com

HARNESS SYMBOL : (F) (E) (D) (R)

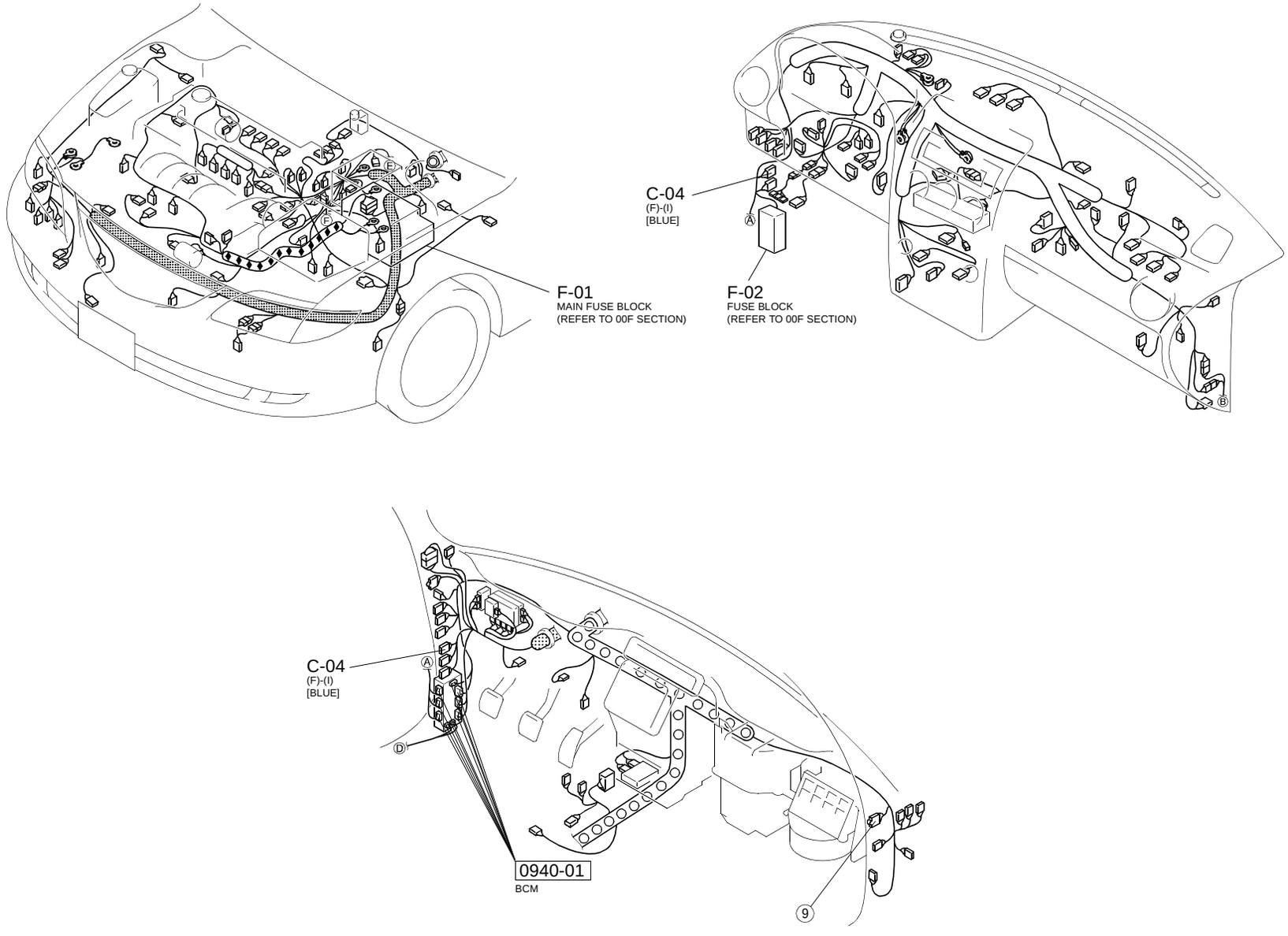

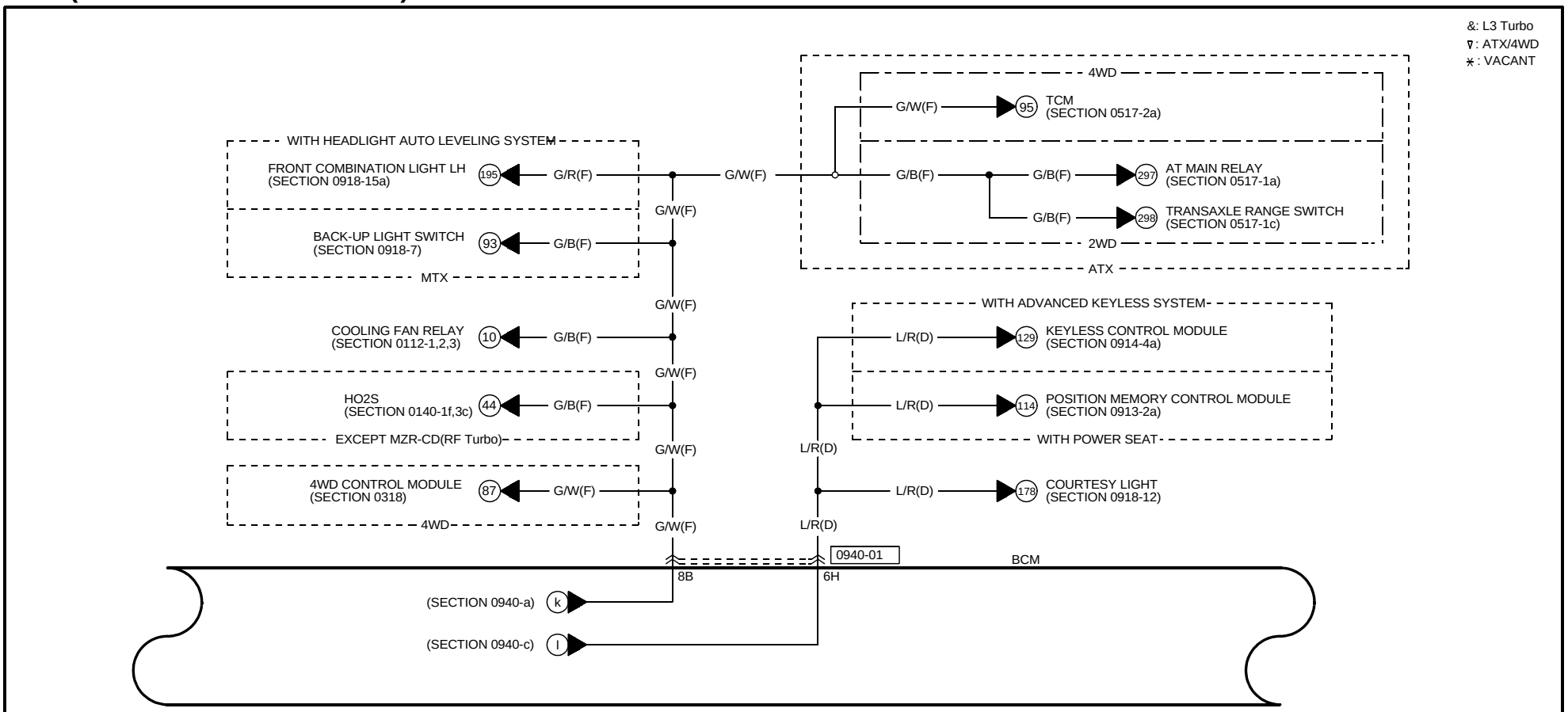

0940-01
BCM

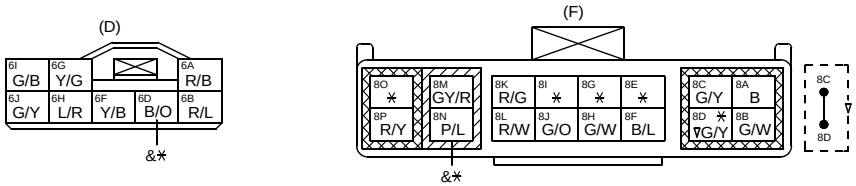

https://www.MyCarManual.com

HARNESS SYMBOL : (F) (E) (D) (R)

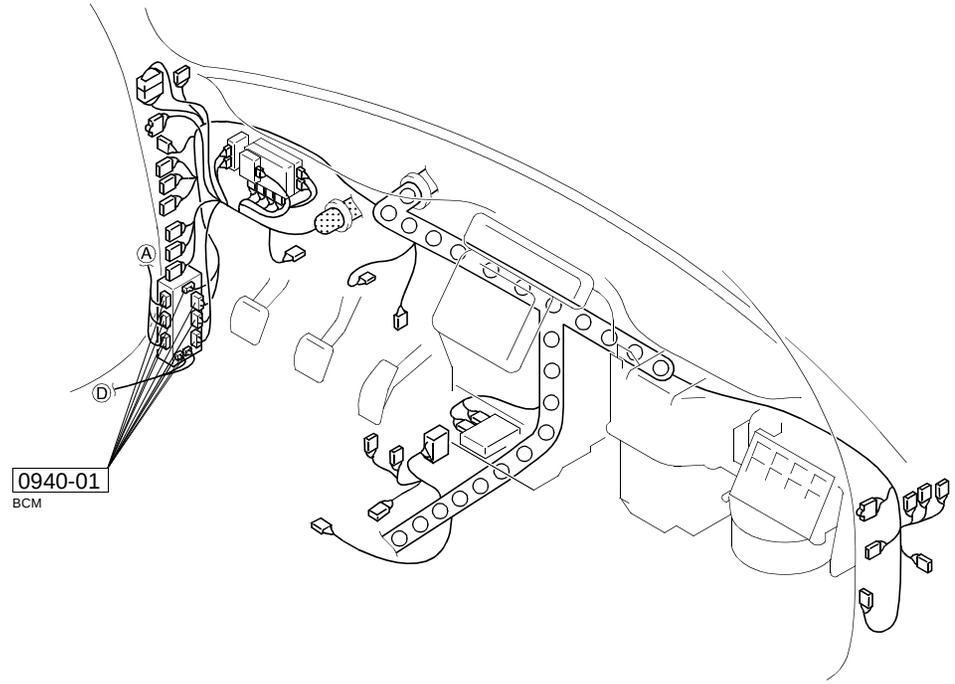

[ ] WAGON
{ } MZR-CD(RF Turbo)
< > WITH CAR-NAVIGATION SYSTEM
@: WITH HEADLIGHT MANUAL LEVELING SYSTEM
#: WITHOUT AUTO LIGHT SYSTEM, WITHOUT RUNNING LIGHT SYSTEM
&: L3 Turbo
▲: WITH ADVANCED KEYLESS SYSTEM
▼: ATX/4WD
▯: WITH HEADLIGHT AUTO LEVELING SYSTEM
✳: VACANT

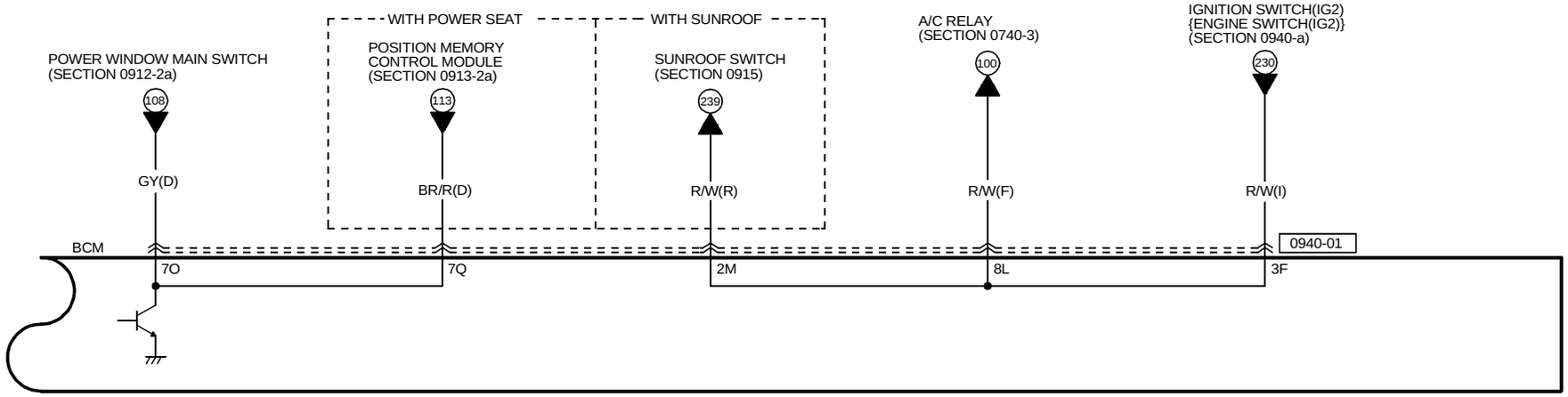

0940-01
BCM

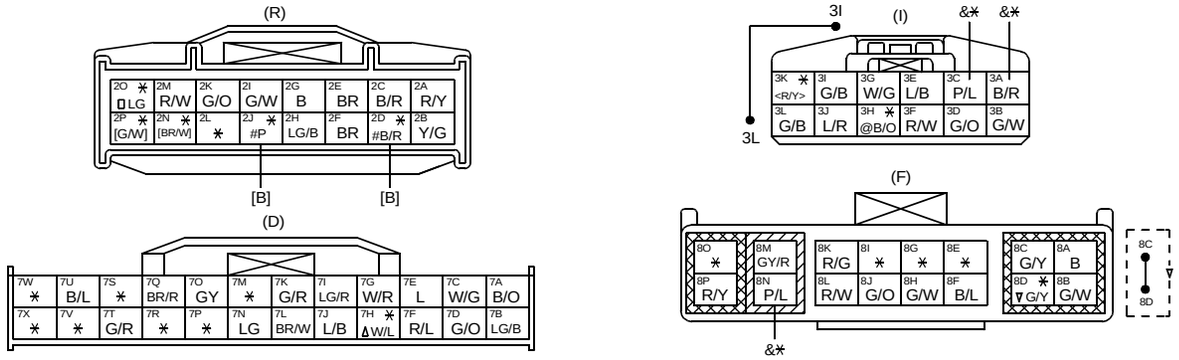
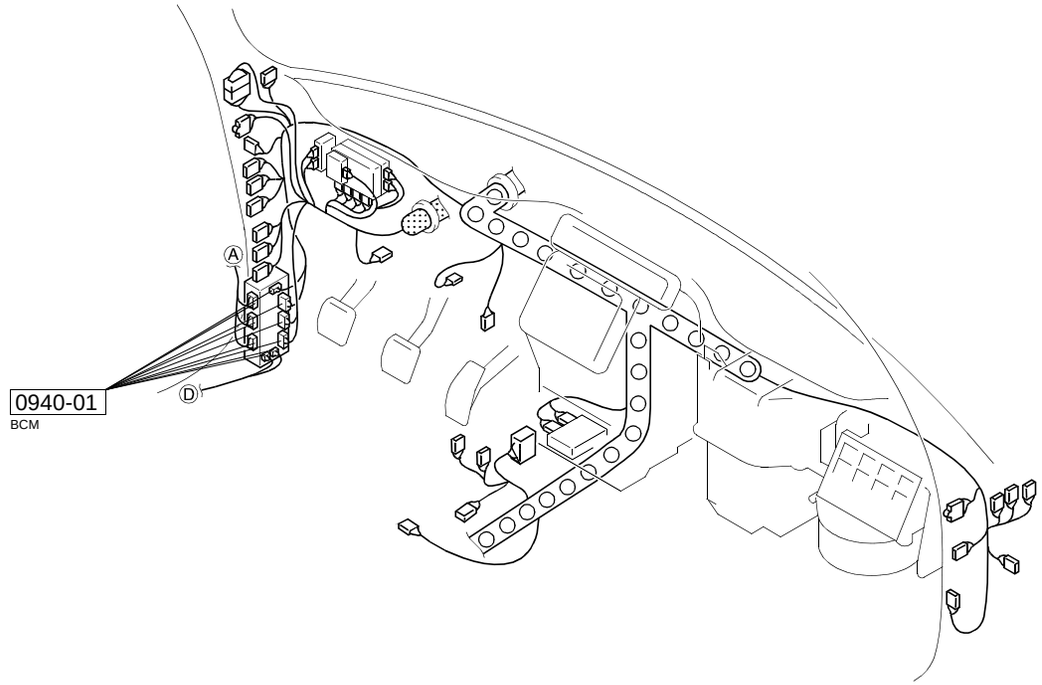
HARNESS SYMBOL : (F) (E) (D) (R)