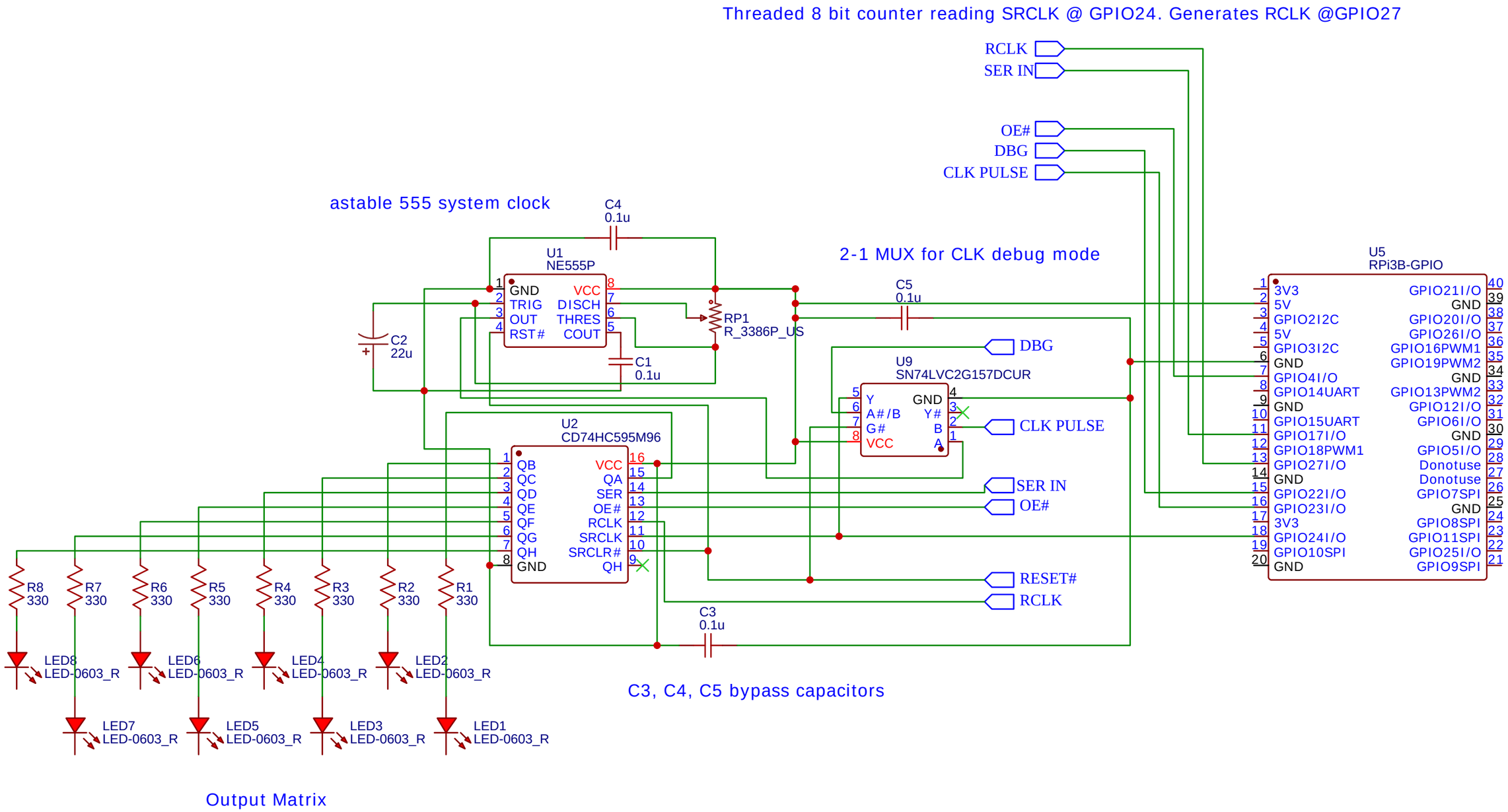

TITLE: Pilot 8-bit Transmitter		REV: 1.0
EasyEDA	Company: LEAP Org	Sheet: 1/1
	Date: 2020-07-26 Drawn By: cSDes1gn	