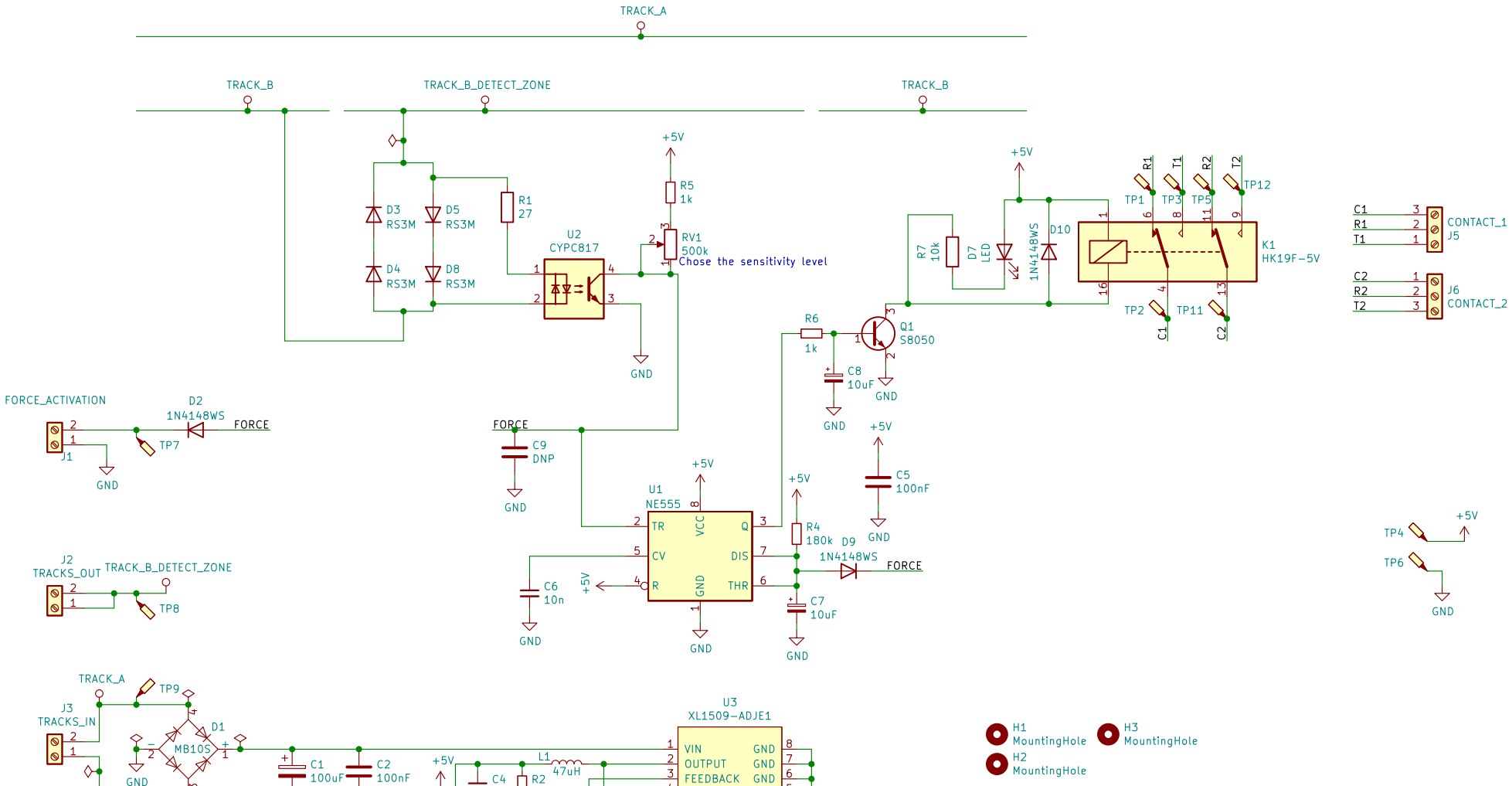


LECTIX

CERN-OHL-S-2.0 license

**LECTIX**

Sheet: /

File: LEC000043.kicad_sch

**Title: LEC000043-Detecteur-de-presence-DCC-Analogique-3A**

| | | |
|---|---|---|
| Size: A4 | Date: 2023-03-26 | **Rev: 1.0** |
| KiCad E.D.A. kicad (6.0.6-1)-1 | | Id: 1/1 |