REVISIONS				
ZONE	REV.	DESCRIPTION	DATE	APPROVED
	A.02	Initial Design	2/15/2017	

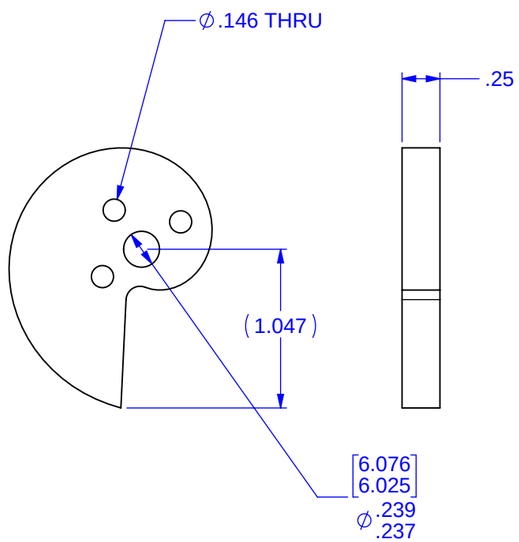

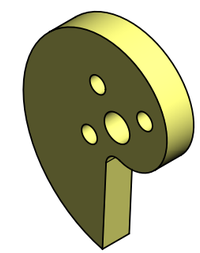

Notes:

1. Material : Aluminum 6061 T6
2. Finish: None

UNLESS OTHERWISE SPECIFIED DIMENSIONS ARE IN INCHES TOLERANCES APPLY AFTER FINISHING. TOLERANCES ARE:

FRACTIONS	DECIMALS	ANGLES
+/- .015	.XX +/-.01	+/- 0.5
	.XXX +/-.005	

FTC Team 8699
League of Extraodinary Roboticists

MATERIAL: See Note 1

FINISH: See Note 2

CAD FILE: 8699-16-345 Cocking Cam -v2

SCALE: 1:1

Cocking Cam
Particle Shooter

DWG. NO. 8699-16-345 REV. A.02

SIZE B | DESIGN G | DATE 2.15.2017 | SHEET 1 of 1