REVISIONS				
ZONE	REV.	DESCRIPTION	DATE	APPROVED

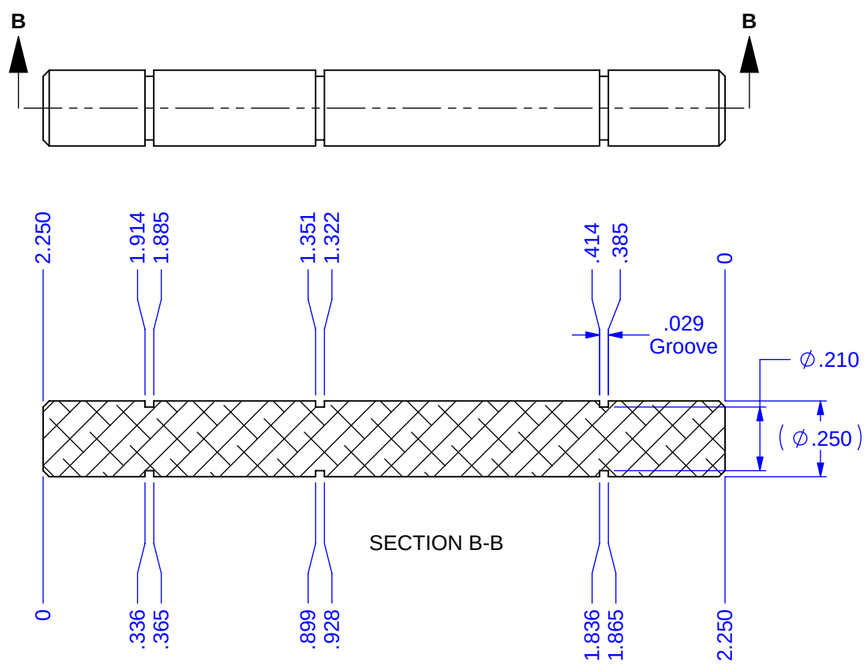

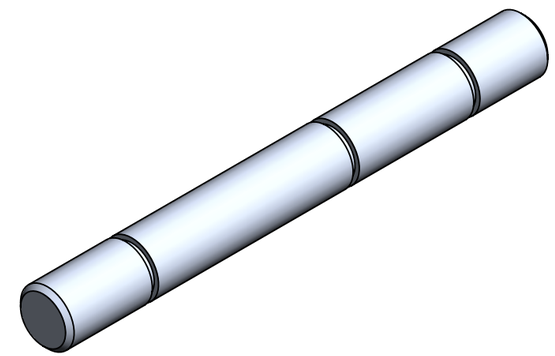

Notes:

1. Material : aluminum rod
2. Finish: -

UNLESS OTHERWISE SPECIFIED DIMENSIONS ARE IN INCHES TOLERANCES APPLY AFTER FINISHING. TOLERANCES ARE: FRACTIONS +/- .015 DECIMALS .XX +/-.01 .XXX +/-.005 ANGLES +/- 0.5	FTC Team 8699 League of Extraodinary Roboticists
MATERIAL See Note 1	Shaft - Gripper Grooved Double Gripper
FINISH See Note 2	DWG. NO. 8699-17-318 REV. A.01
CAD FILE: 8699-17-318 Shaft - Gripper Grooved	
SCALE: 2:1	SIZE B DESIGN - DATE 12/22/2017 SHEET 1 of 1