Notes:

1. This drawing is being furnished to provided critical dimension and surface callout.
   All part details are to be obtained from the 3D CAD file named "8699-16-305 Cocking Cam", revision A.01.

2. Dimensional tolerance on the 3D data file are +/- .008, unless otherwise noted.

3. Material: Aluminum 6061 T6 or approved equivilent.

4. Finish: None

REVISIONS				
ZONE	REV.	DESCRIPTION	DATE	APPROVED
	A.01	Initial Design	1/31/2017	Mentor GR

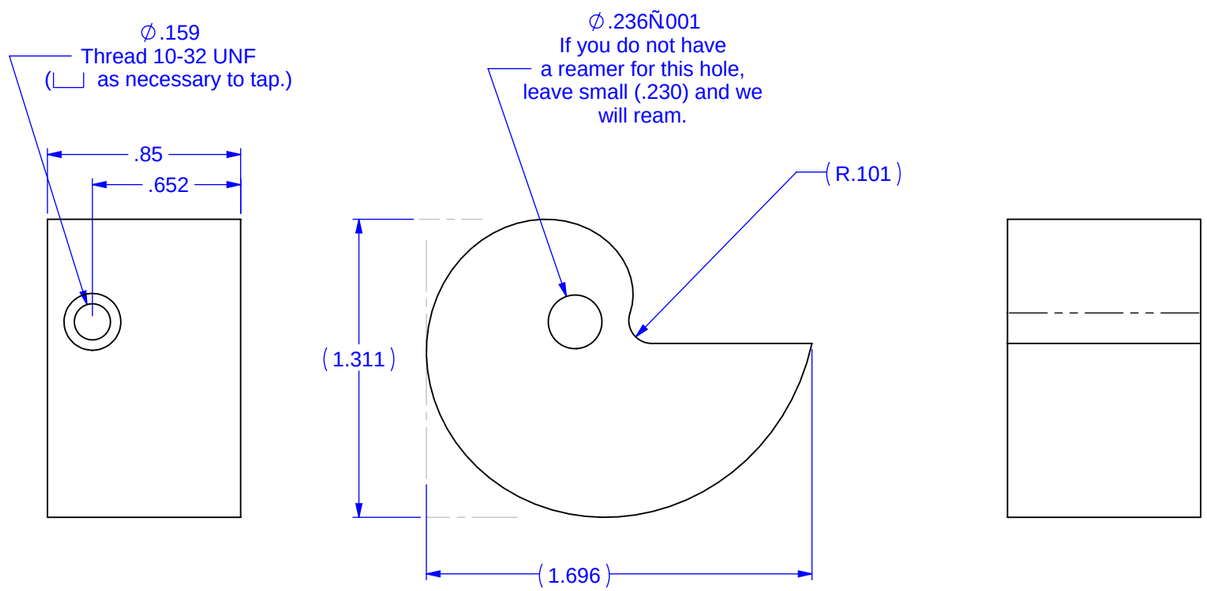

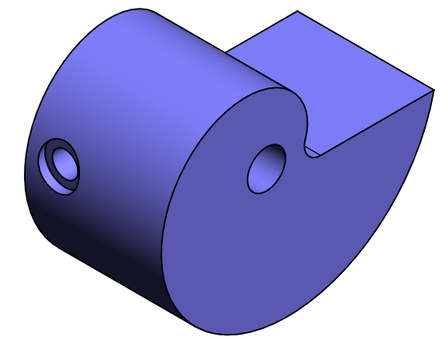

UNLESS OTHERWISE SPECIFIED DIMENSIONS ARE IN INCHES TOLERANCES APPLY AFTER FINISHING. TOLERANCES ARE:

FRACTIONS	DECIMALS	ANGLES
+/- .015	.XX +/-.01	+/- 0.5
	.XXX +/-.005	

FTC Team 8699
League of Extraodinary Roboticists

MATERIAL: See Notes

FINISH: See Notes

CAD FILE: 8699-16-305 Cocking Cam

SCALE: 3:2

Cocking Cam
Particle Shooter

DWG. NO. 8699-16-305

REV. A.01

SIZE B | DESIGN G | DATE 1.31.2017 | SHEET 1 of 1