REVISIONS				
ZONE	REV.	DESCRIPTION	DATE	APPROVED
	A		1/08/2018	
	B	.15 holes thru were tapped 6-32.	10/8/2018	

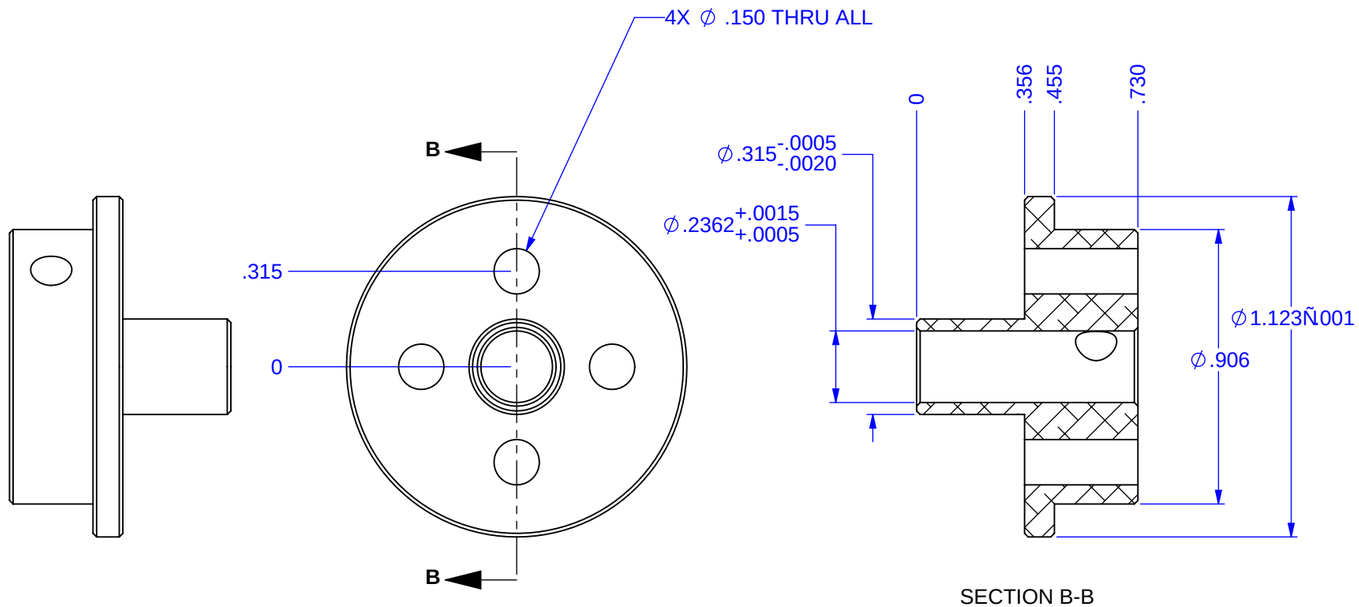

SECTION B-B

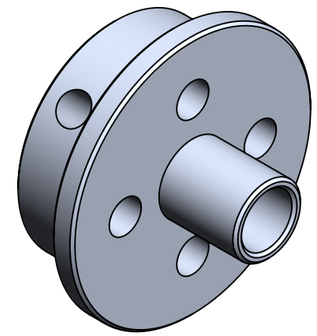

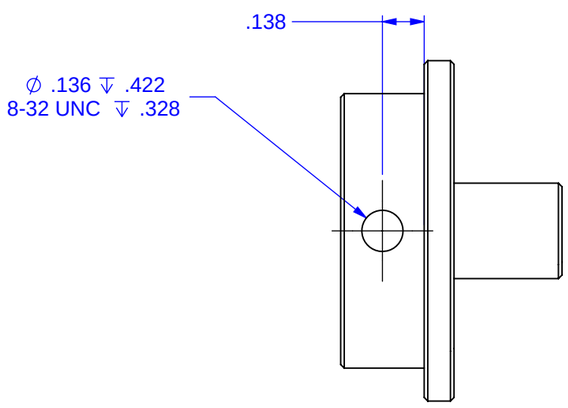

Notes:

1. Material : 6061-T6 (SS)
2. Finish: -

UNLESS OTHERWISE SPECIFIED DIMENSIONS ARE IN INCHES TOLERANCES APPLY AFTER FINISHING. TOLERANCES ARE: FRACTIONS +/- .015 DECIMALS .XX +/-.01 .XXX +/-.005 ANGLES +/- 0.5	FTC Team 8699 League of Extraodinary Roboticists
MATERIAL See Note 1	Mech Wheel Hub Wheel & Mtr
FINISH See Note 2	DWG. NO. 8699-18-328 REV. B
CAD FILE: 8699-17-328 Mech Wheel Hub SCALE: 2:1	SIZE B DESIGN - DATE 10.08.2018 SHEET 1 of 1