REVISIONS				
ZONE	REV.	DESCRIPTION	DATE	APPROVED
	A.01	Initial Design	3/12/2017	

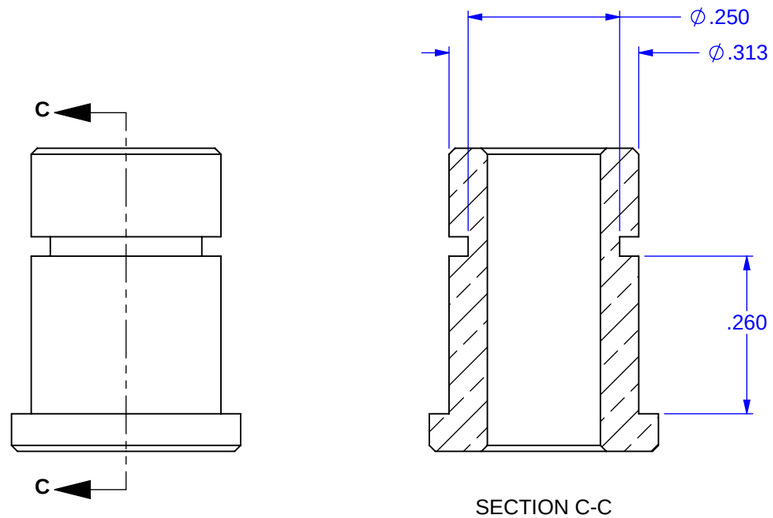

SECTION C-C

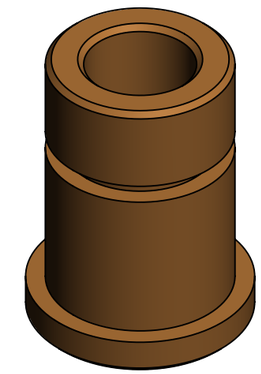

Notes:

1. Material : Bronze
2. Finish: -

UNLESS OTHERWISE SPECIFIED DIMENSIONS ARE IN INCHES TOLERANCES APPLY AFTER FINISHING. TOLERANCES ARE:
FRACTIONS +/- .015 DECIMALS .XX +/-.01 .XXX +/-.005 ANGLES +/- 0.5

MATERIAL: See Note 1

FINISH: See Note 2

CAD FILE: 8699-16-351 MOD Tetrix 739091 Bushing - Shooter

SCALE: 4:1

FTC Team 8699
League of Extraodinary Roboticists

MOD Bushing - Sweeper
Tetrix 739091

DWG. NO. 8699-16-351 REV. A.01

SIZE B DESIGN - DATE 3.12.2017 SHEET 1 of 1