REVISIONS				
ZONE	REV.	DESCRIPTION	DATE	APPROVED
	A.01	Initial Design	2/13/2017	

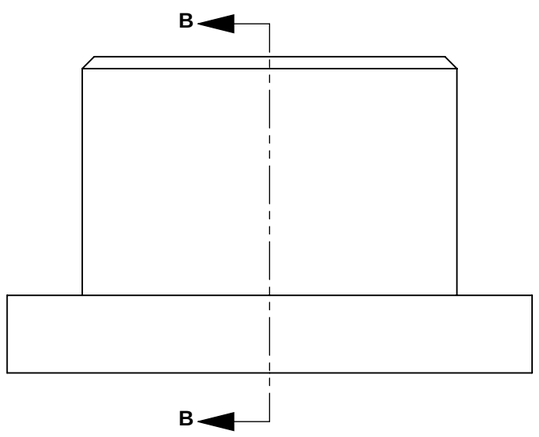

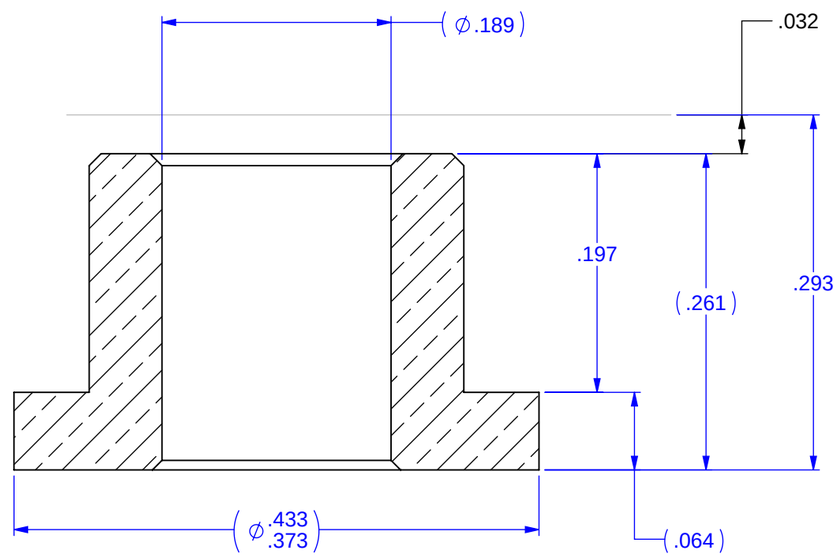

SECTION B-B

Notes:

1. Material : Bushing Tetrix 73909 Bronze
2. Finish: -

UNLESS OTHERWISE SPECIFIED DIMENSIONS ARE IN INCHES TOLERANCES APPLY AFTER FINISHING. TOLERANCES ARE:

FRACTIONS	DECIMALS	ANGLES
+/- .015	.XX +/-.01	+/- 0.5
	.XXX +/-.005	

FTC Team 8699
League of Extraodinary Roboticists

MATERIAL: See Note 1

FINISH: See Note 2

MOD 3/16 bushing
Tetrix 73909

DWG. NO. 8699-16-340 REV. A.01

CAD FILE: 8699-16-340 MOD tetrix_739091 bushing

SCALE: 8:1 | SIZE B | DESIGN - | DATE 2.13.2017 | SHEET 1 of 1