REVISIONS				
ZONE	REV.	DESCRIPTION	DATE	APPROVED
	A	INITIAL DESIGN	6/27/2014	

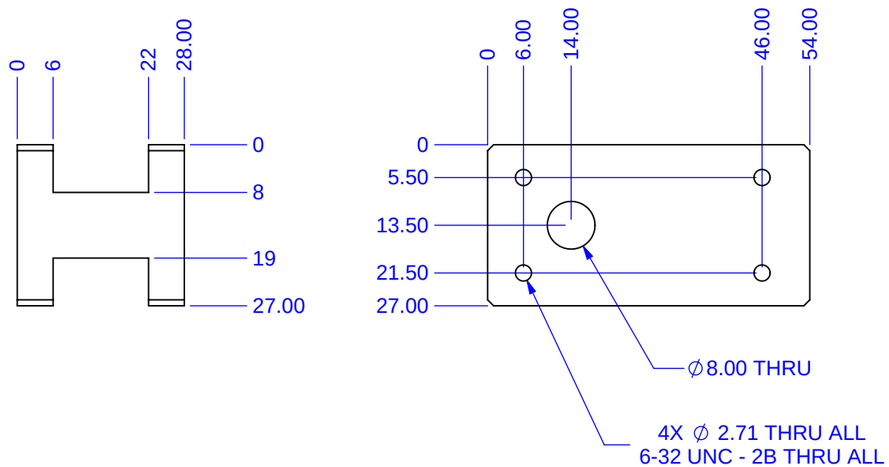

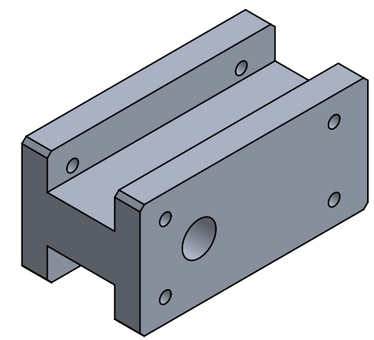

Notes:

1. Material : Aluminum 6061 T6
2. Finish: --

UNLESS OTHERWISE SPECIFIED DIMENSIONS ARE IN MILIMETERS. TOLERANCES APPLY AFTER FINISHING. TOLERANCES ARE:

FRACTIONS	DECIMALS	ANGLES
+/- .015	.X +/-0.3 .XX +/-0.1	+/- 0.5

Nexus Design, llc
1 Jacks Hill Road Oxford, CT 06478
Phone: 203-888-1564
Fax: 203-888-1568
www.nexusdesignllc.com

MATERIAL: 6061-T6 ALUM.

FINISH: CLEAR IRIDITE

Frame Support Wheels

DWG. NO. 8699-18-349

REV. A

CAD FILE: 8699-18-349 Frame Support Wheels

SCALE: 1:1

SIZE B | DESIGN -- | DATE 10.08.2018 | SHEET 1 of 1