REVISIONS				
ZONE	REV.	DESCRIPTION	DATE	APPROVED

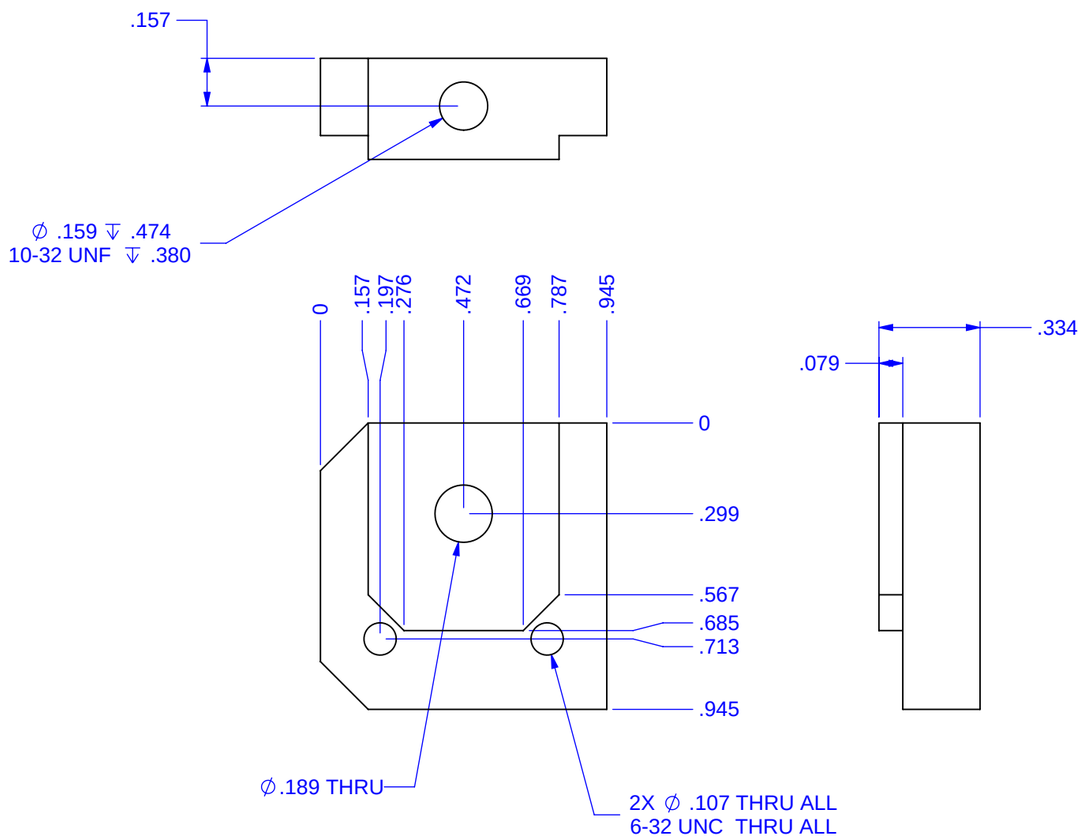

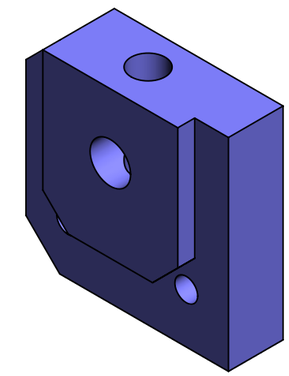

Notes:

1. Material : aluminum
2. Finish: -

UNLESS OTHERWISE SPECIFIED DIMENSIONS ARE IN INCHES TOLERANCES APPLY AFTER FINISHING. TOLERANCES ARE: FRACTIONS +/- .015 DECIMALS .XX +/-.01 .XXX +/-.005 ANGLES +/- 0.5	FTC Team 8699 League of Extraodinary Roboticists
MATERIAL See Note 1	V.Lift Sprocket Shaft Block -
FINISH See Note 2	DWG. NO. 8699-17-312 REV. A
CAD FILE: 8699-17-312 V.Lift Sprocket Shaft Block	SIZE B DESIGN - DATE 12.07.2017 SHEET 1 of 1
SCALE: 2:1	