REVISIONS				
ZONE	REV.	DESCRIPTION	DATE	APPROVED

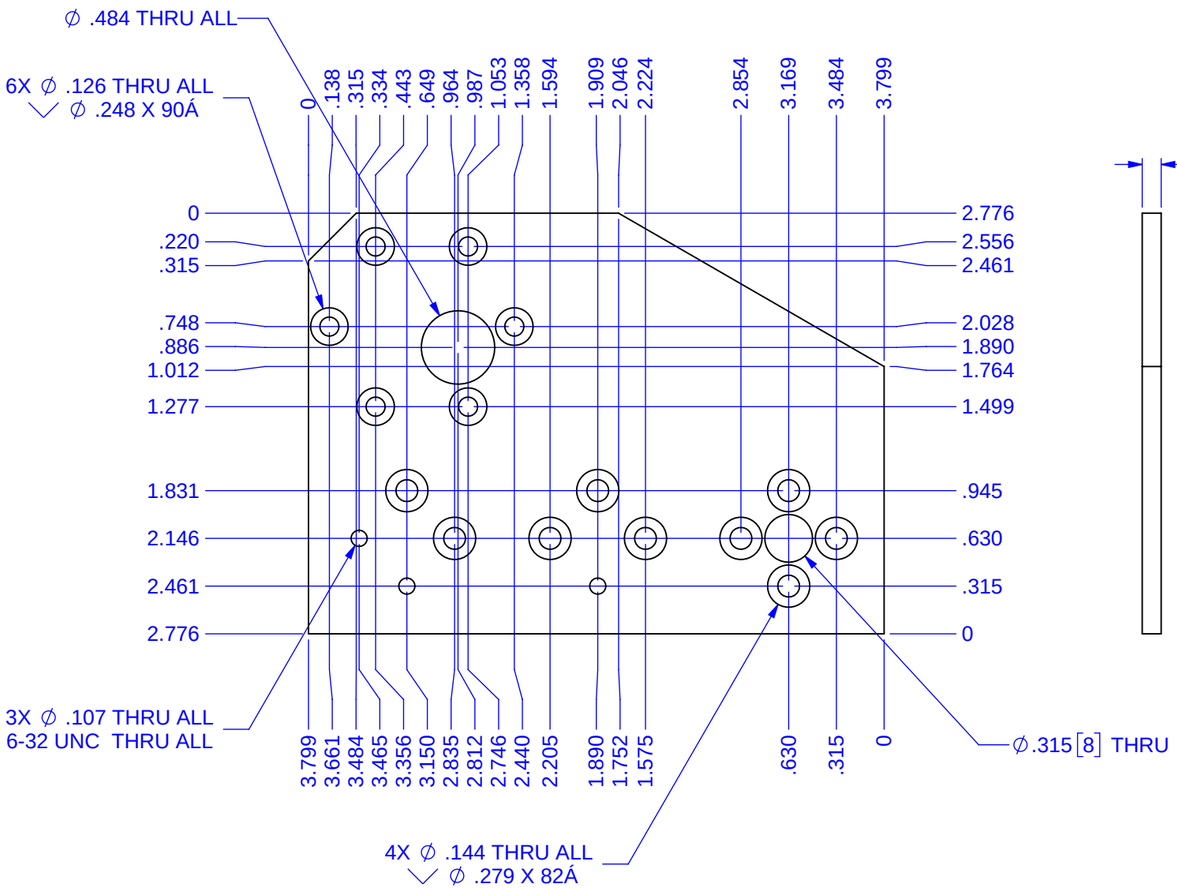

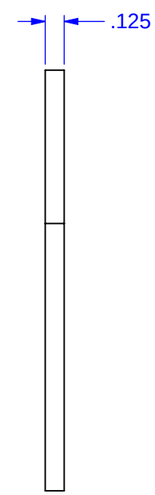

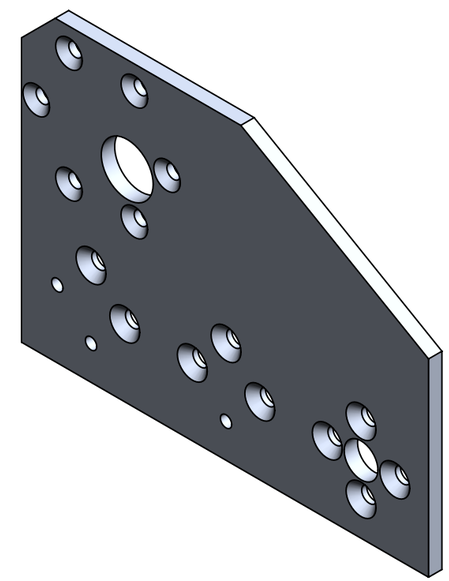

Notes:

1. Material : .125 thick 6061 T6 Al
2. Finish: -

UNLESS OTHERWISE SPECIFIED DIMENSIONS ARE IN INCHES TOLERANCES APPLY AFTER FINISHING. TOLERANCES ARE:
FRACTIONS +/- .015 DECIMALS .XX +/-.01 .XXX +/-.005 ANGLES +/- 0.5

FTC Team 8699
League of Extraodinary Roboticists

MATERIAL: See Note 1

FINISH: See Note 2

Mech Motor Mount Rt-F Wheel & Mtr

DWG. NO. 8699-17-326 REV. A.01

CAD FILE: 8699-17-326 Mech Motor Mount

SCALE: 1:1

SIZE B DESIGN - DATE 1.01.2018 SHEET 1 of 1