REVISIONS				
ZONE	REV.	DESCRIPTION	DATE	APPROVED
	A.01	Initial Design	2/13/2017	

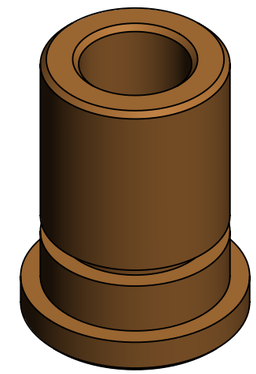

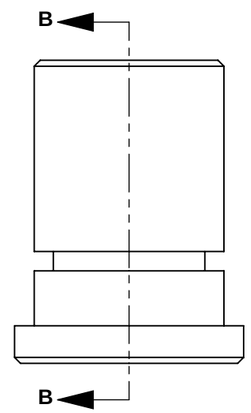

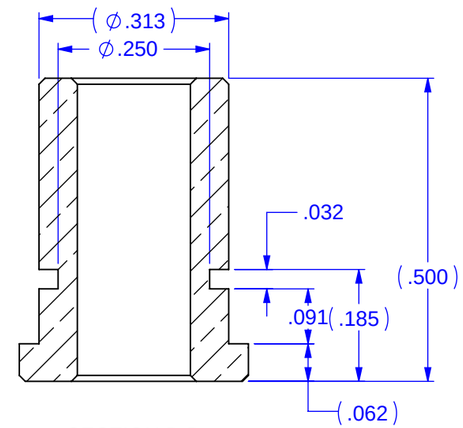

SECTION B-B

Notes:

1. Material : Bronze
2. Finish: -

UNLESS OTHERWISE SPECIFIED DIMENSIONS ARE IN INCHES TOLERANCES APPLY AFTER FINISHING. TOLERANCES ARE: FRACTIONS +/- .015 DECIMALS .XX +/-.01 .XXX +/-.005 ANGLES +/- 0.5	FTC Team 8699 League of Extraodinary Roboticists
MATERIAL See Note 1	MOD Bushing - Shooter Tetrix 739091
FINISH See Note 2	DWG. NO. 8699-16-343 REV. A.01
CAD FILE: 8699-16-343 MOD Tetrix 739091 Bushing - Shooter	
SCALE: 4:1	SIZE B DESIGN - DATE 2.13.2017 SHEET 1 of 1