Pin	Color	Signal	Connector	Cable	Connector
1	RED	24VDC +	P1 DT04-3P	W1 GLV Power 12/3 Cable	P2 DT04-3P
2	BLK	LV RTN			
3	GRN	CHGND			
1	RED	24VDC Supply	P1 DT06-2S	W2 GLVMS 12/2 Cable	10mm Ring Conn.
2	BLK	GLVMS			
1	RED	To E-Stop	P1 DT06-2S	W3 GLV Power 12/2 Cable	8/32 Ring Conn.
2	BLK	From E-Stop			
1	RED	MReset A	P1 DT06-2S	W5 MReset 12/2 Cable	8/32 Ring Conn.
2	BLK	MReset B			
1	WHT	SL1	P1 DT06-4S	W6 Safety Loop 16/4 Cable	P2 DT06-4S
2	BRN	SL2			
3	RED	AIRs+			
4	BLK	AIRs-			
1	Jumper wire between pins 1&2		P1 DT06-4S	W7 Safety Loop 16/1 Cable	
2					
3	AIRs+				
4	AIRs-				
1	RED	24VDC +	P1 DT06-2S	W8 TSVMS 16/2 Cable	10mm Ring Conn.
2	BLK	LV RTN			
1	GRN	CAN H	P1 DT06-3S	W9 SCADA 20/3 CanBus Cable	P2 DT06-3S
2	YEL	CAN L			
3	BARE SHIELD				
1	120 Ohm termination resistor		P1 DT06-3S	W10 SCADA	
2					
3					

Pin	Color	Signal	Connector	Cable	Connector
1	RED	24VDC +			
2	BLK	LV RTN			
3	GRN	CHGND			
1	RED	24VDC Supply			
2	BLK	GLVMS			
1	RED	To E-Stop			
2	BLK	From E-Stop			
1	RED	MReset A			
2	BLK	MReset B			
1	WHT	SL1			
2	BRN	SL2			
3	RED	AIRs+			
4	BLK	AIRs-			
1	RED	24VDC +			
2	BLK	LV RTN			
1	GRN	CAN H			
2	YEL	CAN L			
3	BARE SHIELD				

Pin	Color	Signal	Connector	Cable	Connector
1	RED	TSV HV	3/8 Ring Conn.	W11 Tractive System HV 2/0 Battery Cable	3/8 Ring Conn.
1	RED	TSV HV	3/8 Ring Conn.	W12 Tractive System HV 2/0 Battery Cable	P2 NLDFT-E-GN-L-S120-M40A
1	RED	TSV HV	3/8 Ring Conn.	W13 Tractive System HV 2/0 Battery Cable	P1 NLDFT-N-BL-L-S120-M40A
1	RED	TSV HV	P2 NLDFT-N-BL-L-S120-M40A	W15 Tractive System HV 2/0 Battery Cable	P1 NLS-N-BL-S120-M40A
1	RED	HVDC +	P1 TBD	W16 TSMP 16/2 Cable	8/32 Ring Conn.
2	BLK	HVDC -			
1	GRN	CAN H	P1 2-Pin Conn.	W17 Motor controller canbus 20/3 CanBus Cable	P2 35-Pin Motor Cont. Conn.
2	YEL	CAN L			
1	RED	ENB	P1 2-Pin Conn.	W18 TSV power supply enable 16/2	P2 37-Pin D Conn.
2	WHT	RTN			

Pin	Color	Signal
1	RED	TSV HV
1	RED	TSV HV
1	RED	TSV HV
1	RED	TSV HV
1	RED	HVDC +
2	BLK	HVDC -
T	GRN	CAN H
B	YEL	CAN L
D		
26	RED	ENB
19	WHT	RTN

Pin	Color	Signal	Connector	Cable	Connector
1			P1	W20 HDMI	P2
1	BLK	Throttle RTN	P1 DT06-8SA	W21 Control System 16/8 Cable	P2 35-Pin Motor Cont. Conn.
2	RED	Throttle			
3	BLU	5VDC			
4	ORG	FWD Signal			
5	YEL	Precharge			
6	BRN	GIGAVAC Coil			
7	RED/BLK	Coil Return			
8	BL/BLK	REV Signal			
1	RED	To E-Stop	P1 DT06-12SA	W22 Control System 16/12 Cable	Crimp Conn.
2	BLK	From E-Stop			
3	BLU	To CReset			
4	ORG	From CReset			
5	WHT	Fault LED			
6	GRN	AIRs LED			
7	WHT/BLK	RTN GLV			
8	RED/BLK	GLV Present LED			
9	GRN/BLK	Safety Loop LED			
10	ORG/BLK	Spare			
11	BLU/BLK	Spare			
12	BLK/WHT	Spare			
1	BLK	Brake Light	P1 DT06-8SA	W23 Control System 16/8 Cable	8/32 Ring Conn.
2	RED	Brake Light RTN			
3	BLU	TSAL Left			
4	ORG	TSAL Left RTN			
5	YEL	TSAL Right			
6	BRN	TSAL Right RTN			
7	RED/BLK	RTDS			
8	BL/BLK	RTDS RTN			

These cables come out of the same jack but go to different places

Pin	Color	Signal
1		
T	BLK	Throttle RTN
B	RED	Throttle
D	BLU	5VDC
*	ORG	FWD Signal
*	YEL	Precharge
*	BRN	GIGAVAC Coil
*	RED/BLK	Coil Return
*	BL/BLK	REV Signal
1	RED	To E-Stop
2	BLK	From E-Stop
3	BLU	To CReset
4	ORG	From CReset
5	WHT	Fault LED
6	GRN	AIRs LED
7	WHT/BLK	RTN GLV
8	RED/BLK	GLV Present LED
9	GRN/BLK	Safety Loop LED
10	ORG/BLK	Spare
11	BLU/BLK	Spare
12	BLK/WHT	Spare
1	BLK	Brake Light
2	RED	Brake Light RTN
3	BLU	TSAL Left
4	ORG	TSAL Left RTN
5	YEL	TSAL Right
6	BRN	TSAL Right RTN
7	RED/BLK	RTDS
8	BL/BLK	RTDS RTN

This cable might need more connections TSI needs to decide. Suggestion, bring all pots back

Pin	Color	Signal	Connector	Cable	Connector
1	BLK	Brake 5VDC +	P1 DT06-8S	W24 Control System 16/8 Cable	Misc. Conn.
2	RED	Brake Pressure			
3	BLU	Brake Over-Travel			
4	ORG	APPS 1 5VDC +			
5	YEL	APPS 1 Signal			
6	BRN	APPS 2 5VDC +			
7	RED/BLK	APPS 2 Signal			
8	BL/BLK	RTN GLV			
1	BLK	LV GND	P1 DT06-8S	W25 Control System 16/8 Cable	Crimp Conn.
2	RED	IMD Fault LED			
3	BLU	To Drive Button			
4	ORG	From Drive Button			
5	YEL	Pre-Charge LED			
6	BRN	Drive LED			
7	RED/BLK	HV Present LED			
8	BLU/BLK	Spare			
1	RED	5V +	P1 DT06-6S	W26 Encoder/Temp. 22/6 Cable	P2 35-Pin Motor Cont. Conn.
2	BLK	GND			
3	GRN	Encoder B			
4	WHT	Encoder A			
5	YEL	GND			
6	BRN	Motor Temp.			
1	WHT	LV GND	P1 DT06-6S	W28 Control System 16/6 Cable	8/32 Ring Conn.
2	BRN	TS Energized Light			
3	RED	Spare			
4	GRN	Spare			
5	YEL	Spare			
6	BLK	Spare			

Pin	Color	Signal
1	BLK	Brake 5VDC +
2	RED	Brake Pressure
3	BLU	Brake Over-Travel
4	ORG	APPS 1 5VDC +
5	YEL	APPS 1 Signal
6	BRN	APPS 2 5VDC +
7	RED/BLK	APPS 2 Signal
8	BL/BLK	RTN GLV
1	BLK	LV GND
2	RED	IMD Fault LED
3	BLU	To Drive Button
4	ORG	From Drive Button
5	YEL	Pre-Charge LED
6	BRN	Drive LED
7	RED/BLK	HV Present LED
8	BLU/BLK	Spare
1	RED	5V +
2	BLK	GND
3	GRN	Encoder B
4	WHT	Encoder A
5	YEL	GND
6	BRN	Motor Temp
1	WHT	LV GND
2	BRN	TS Energized Light
3	RED	Spare
4	GRN	Spare
5	YEL	Spare
6	BLK	Spare

Pin	Color	Signal	Connector	Cable	Connector
1	GRN	CAN H	P1 DT06-6S	W31 SCADA 20/3 CanBus Cable	P2 DT06-3S
2	YEL	CAN L			
3	BARE SHIELD				
4					
5					
6					
1	120 Ohm termination resistor		P1 DT06-6S	W32 SCADA	
2					
3					
4					
5					
6					

Pin	Color	Signal
1	GRN	CAN H
2	YEL	CAN L
3	BARE SHIELD	

Pin numbers with a star are unverified

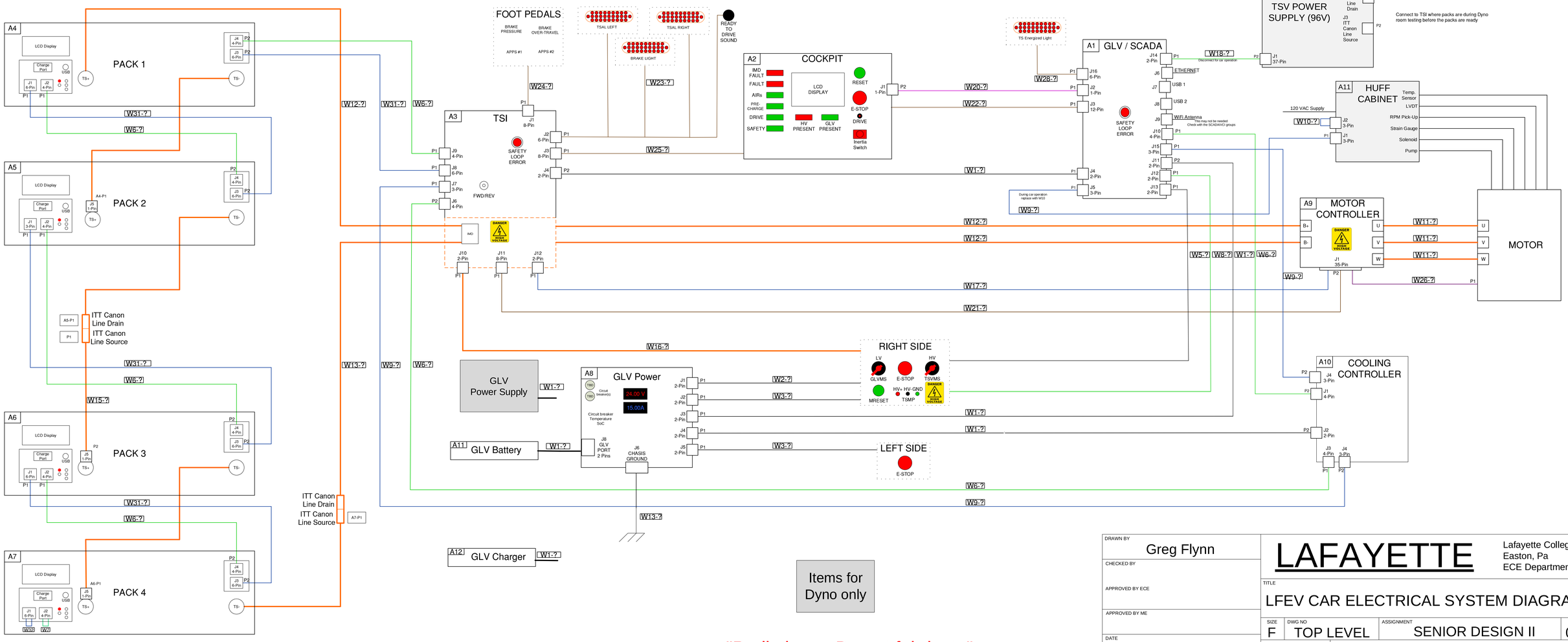

"Preliminary, Do not fabricate"

DRAWN BY	Greg Flynn
CHECKED BY	
APPROVED BY ECE	
APPROVED BY ME	
DATE	2017 - 2 – 19

LAFAYETTE

Lafayette College
Easton, Pa
ECE Department

TITLE: LFEV CAR ELECTRICAL SYSTEM DIAGRAM

SIZE	DWG NO	ASSIGNMENT	REV
F	TOP LEVEL	SENIOR DESIGN II	0.4

COURSE	SHEET
TOP LEVEL	1 OF 1