Pin	Color	Signal			Pin	Color	Signal
1	RED	24VDC +	P1 DT06-2S — W1 GLV Power 12/3 Cable — P2 DT06-2S		1	RED	24VDC +
2	BLK	LV RTN			2	BLK	LV RTN
1	RED	5VDC +	P1 DT06-3S — W2 GLV Power 12/3 Cable — Crimp Conn.		1	RED	5VDC +
2	BLK	LV RTN			2	BLK	LV RTN
3	GRN	CHGND			3	GRN	CHGND
1	RED	BRBLS	P1 DT06-2S — W3 BRBLS 12/2 Cable — Crimp Conn.		1	RED	BRBLS
2	BLK	BRBLS RTN			2	BLK	BRBLS RTN
1	WHT	SL1	P1 DT06-4S — W6 Safety Loop 16/4 Cable — P2 DT06-4S		1	WHT	SL1
2	BRN	SL2			2	BRN	SL2
3	RED	AIRs+			3	RED	AIRs+
4	BLK	AIRs-			4	BLK	AIRs-
1	Jumper wire						
2	between pins 1&2						
3	AIRs+		P1 DT06-4S — W7 Safety Loop 16/1 Cable				
4	AIRs-						
1	RED	TSV HV	3/8 Ring Conn. — W11 Tractive System HV 2/0 Battery Cable — 3/8 Ring Conn.		1	RED	TSV HV

Pin	Color	Signal			Pin	Color	Signal
1	RED	TSV HV	3/8 Ring Conn. — W12 Tractive System HV 2/0 Battery Cable — P2 NLDFT-E-GN-L-S120-M40A		1	RED	TSV HV
1	RED	TSV HV	3/8 Ring Conn. — W13 Tractive System HV 2/0 Battery Cable — P1 NLDFT-N-BL-L-S120-M40A		1	RED	TSV HV
1	RED	TSV HV	P2 NLDFT-N-BL-L-S120-M40A — W15 Tractive System HV 2/0 Battery Cable — P1 NLS-N-BL-S120-M40A		1	RED	TSV HV
1	RED	ENB	P1 DT06-2S — W18 TSV power supply enable 16/2 — P2 37-Pin D Conn.		26	RED	ENB
2	WHT	RTN			19	WHT	RTN
1			P1 — W20 HDMI — P2		1		

Pin	Color	Signal			Pin	Color	Signal
1	RED	Throttle 5V	P1 DT06-12SA — W21 Control System 16/10 Cable — P2 35-Pin Motor Cont. Conn.		T	RED	Throttle 5V
2	BLK	Throttle			B	BLK	Throttle
3	BLU	5VDC			D	BLU	5VDC
4	ORG	FWD Signal			*	ORG	FWD Signal
5	WHT	Spare			*	WHT	Spare
6	GRN	GIGAVAC Coil			*	GRN	GIGAVAC Coil
7	WHT/BLK	Coil Return			*	WHT/BLK	Coil Return
8	RED/BLK	REV Signal			*	RED/BLK	REV Signal
9	GRN/BLK	I/O Gnd			*	GRN/BLK	I/O Gnd
10	ORG/BLK	+12V			*	ORG/BLK	+12V
11	YEL	CAN H	SCADA 20/2 Can bus		*	YEL	CAN H
12	GRN	CAN L			*	GRN	CAN L
1	RED	Select button	P1 DT06-12SA — W22 Control System 16/12 Cable — Crimp Conn.		1	RED	Select button
2	BLK	Scroll button			2	BLK	Scroll button
3	BLU	Cruise button			3	BLU	Cruise button
4	ORG	BRB			4	ORG	BRB
5	WHT	BRB RTN			5	WHT	BRB RTN
6	GRN	CPR			6	GRN	CPR
7	WHT/BLK	CPR RTN			7	WHT/BLK	CPR RTN
8	RED/BLK	GLV Present LED			8	RED/BLK	GLV Present LED
9	GRN/BLK	SL LED			9	GRN/BLK	SL LED
10	ORG/BLK	Fault LED			10	ORG/BLK	Fault LED
11	BLU/BLK	AIRs LED			11	BLU/BLK	AIRs LED
12	BLK/WHT	SPARE			12	BLK/WHT	SPARE
1	BLK	Brake Light	P1 DT06-8SA — W23 Control System 4 x 16/2 Cable — 8/32 Ring Conn. (These cables come out of the same jack but go to different places)		1	BLK	Brake Light
2	RED	Brake Light RTN			2	RED	Brake Light RTN
3	BLU	TSAL Left			3	BLU	TSAL Left
4	ORG	TSAL Left RTN			4	ORG	TSAL Left RTN
5	YEL	TSAL Right			5	YEL	TSAL Right
6	BRN	TSAL Right RTN			6	BRN	TSAL Right RTN
7	RED/BLK	RTDS			7	RED/BLK	RTDS
8	BL/BLK	RTDS RTN			8	BL/BLK	RTDS RTN

This cable might need more connections TSI needs to decide. Suggestion, bring all pots back

Pin	Color	Signal			Pin	Color	Signal
1	BLK	Brake 5VDC +	P1 DT06-8S — W24 Control System 16/8 Cable — Misc. Conn.		1	BLK	Brake 5VDC +
2	RED	Brake Pressure			2	RED	Brake Pressure
3	BLU	Brake Over-Travel			3	BLU	Brake Over-Travel
4	ORG	APPS 1 5VDC +			4	ORG	APPS 1 5VDC +
5	YEL	APPS 1 Signal			5	YEL	APPS 1 Signal
6	BRN	APPS 2 10VDC +			6	BRN	APPS 2 10VDC +
7	RED/BLK	APPS 2 Signal			7	RED/BLK	APPS 2 Signal
8	BL/BLK	RTN GLV			8	BL/BLK	RTN GLV
1	BLK	LV GND	P1 DT06-8S — W25 Control System 16/8 Cable — Crimp Conn.		1	BLK	LV GND
2	RED	IMD Fault LED			2	RED	IMD Fault LED
3	BLU	To Drive Button			3	BLU	To Drive Button
4	ORG	From Drive Button			4	ORG	From Drive Button
5	YEL	Drive LED			5	YEL	Drive LED
6	BRN	HV Present LED			6	BRN	HV Present LED
7	RED/BLK	Cruise Button			7	RED/BLK	Cruise Button
8	BLU/BLK	Cruise RTN			8	BLU/BLK	Cruise RTN
1	RED	5V +	P1 DT06-6S — W26 Encoder/Temp. 22/6 Cable — P2 35-Pin Motor Cont. Conn.		2*	RED	5V +
2	BLK	GND			6*	BLK	GND
3	GRN	Encoder B			7*	GRN	Encoder B
4	WHT	Encoder A			3*	WHT	Encoder A
5	YEL	GND			2*	YEL	GND
6	BRN	Motor Temp.			1*	BRN	Motor Temp
1	WHT	LV GND	P1 DT06-2S — W28 TSEL 16/2 Cable — 8/32 Ring Conn.		1	WHT	LV GND
2	BRN	TS Energized Light			2	BRN	TS Energized Light

Pin	Color	Signal			Pin	Color	Signal
1	YEL	CAN H	P1 DT06-6S — W31 SCADA 20/3 CanBus Cable — P2 DT06-6S		1	YEL	CAN H
2	GRN	CAN L			2	GRN	CAN L
3	BARE	SHIELD			3	BARE	SHIELD
4	BRN	CHGND			4	BRN	CHGND
5	RED	24VDC	GLV Power 12/3 Cable		5	RED	24VDC
6	BLK	24V RTN			6	BLK	24V RTN
1	120 Ohm		P1 DT06-6S — W32 SCADA				
2	termination resistor						
3							
4							
5							
6							
1	WHT	Safety Circuit	P1 DT06-6S — W33 Right side panel 16/6 Cable — Crimp Conn.		1	WHT	Safety Circuit
2	BRN	Safety Circuit RTN			2	BRN	Safety Circuit RTN
3	RED	MRESET			3	RED	MRESET
4	GRN	MRESET RTN			4	GRN	MRESET RTN
5	YEL	TSVMS			5	YEL	TSVMS
6	BLK	TSVMS RTN			6	BLK	TSVMS RTN
1	BRN	CHGND	3/8 Ring Conn. — W34 CHGND 12/1 Cable — 3/8 Ring Conn.		1	BRN	CHGND
1	WHT	TX	P1 DT06-3S — W35 UART 16/3 CanBus Cable — P2 DT06-3S	Note the change of color This cable is a crossover	1	BLK	TX
2	BLK	RX			2	WHT	RX
3	BRN	REF			3	BRN	REF
1	WHT	Tachometer	P1 DT06-6S — W36 Motor connector 16/6 Cable — Crimp Conn.		1	WHT	Safety Circuit
2	BRN	Strain gauge			2	BRN	Safety Circuit RTN
3	RED	Throttle			3	RED	MRESET
4	GRN	Throttle RTN			4	GRN	MRESET RTN
5	YEL	Solenoid			5	YEL	TSVMS
6	BLK	Solenoid RTN			6	BLK	TSVMS RTN

Pin numbers with a star are unverified

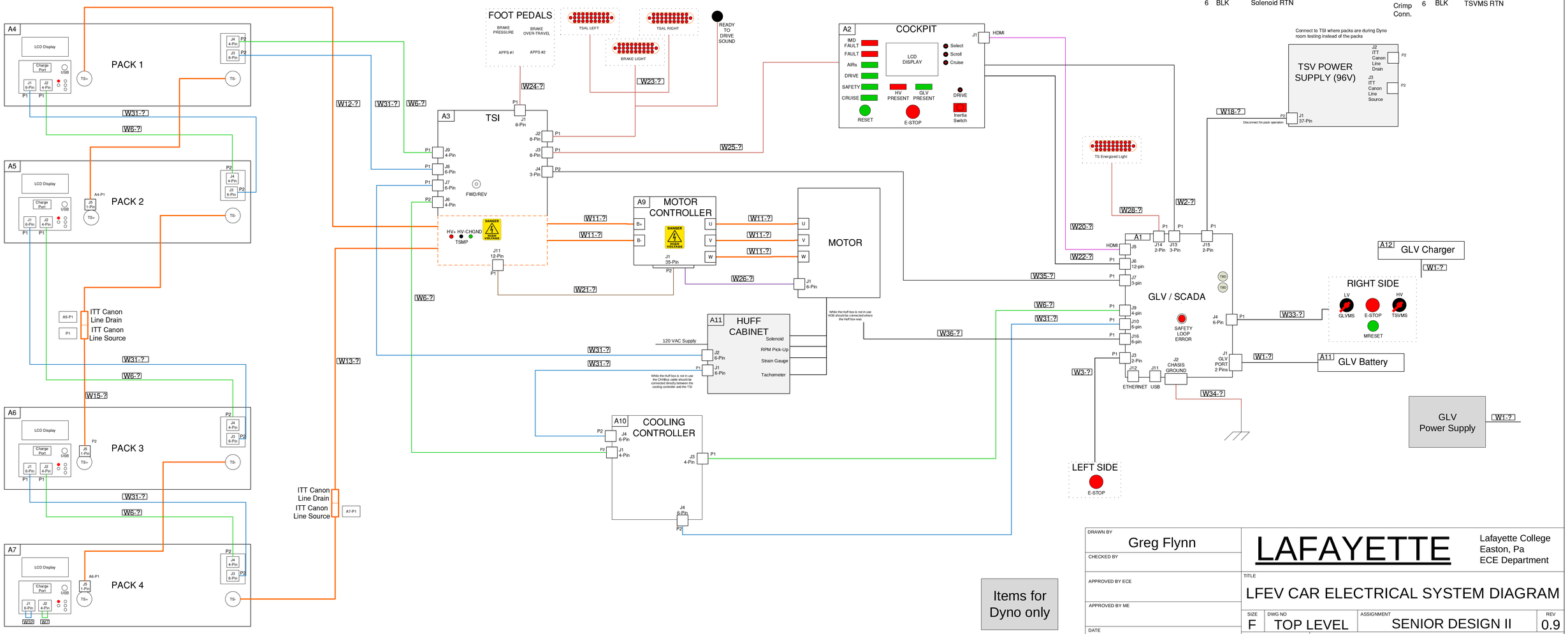

Items for Dyno only

DRAWN BY: Greg Flynn	LAFAYETTE	Lafayette College, Easton, Pa, ECE Department	
CHECKED BY	TITLE: LFEV CAR ELECTRICAL SYSTEM DIAGRAM		
APPROVED BY ECE			
APPROVED BY ME	SIZE: F	DWG NO: TOP LEVEL	ASSIGNMENT: SENIOR DESIGN II — REV: 0.9
DATE: 2017 - 03 – 21	COURSE: TOP LEVEL	SHEET: 1 OF 1	