Pin	Color	Signal
1	RED	24VDC +
2	BLK	LV GND

P1 DT06-2S — W1 GLV Power 16/2 Cable — P2 DT06-2S

Pin	Color	Signal
1	RED	24VDC Supply
2	BLK	GLVMS

P1 DT06-2S — W2 GLVMS 16/2 Cable — 10mm Ring Conn.

Pin	Color	Signal
1	RED	To E-Stop
2	BLK	From E-Stop

P1 DT06-2S — W3 GLV Power 16/2 Cable — 8/32 Ring Conn.

Pin	Color	Signal
1	RED	MReset A
2	BLK	MReset B

P1 DT06-2S — W5 MReset 16/2 Cable — 8/32 Ring Conn.

Pin	Color	Signal
1	WHT	SL1
2	BRN	SL2
3	RED	AIRs+
4	BLK	AIRs-
1	Jumper wire	
2	between pins 1&2	
3	AIRs+	
4	AIRs-	

P1 DT06-4S — W6 Safety Loop 16/4 Cable — P2 DT06-4S

P1 DT06-4S — W7 Safety Loop 16/1 Cable

Pin	Color	Signal
1	RED	24VDC Supply
2	BLK	24VDC Return

P1 DT06-2S — W8 TSVMS 16/2 Cable — 10mm Ring Conn.

Pin	Color	Signal
1	RED	24VDC +
2	BLK	LV GND

Pin	Color	Signal
1	RED	24VDC Supply
2	BLK	GLVMS

Pin	Color	Signal
1	RED	To E-Stop
2	BLK	From E-Stop

Pin	Color	Signal
1	RED	MReset A
2	BLK	MReset B

Pin	Color	Signal
1	WHT	SL1
2	BRN	SL2
3	RED	AIRs+
4	BLK	AIRs-

Pin	Color	Signal
1	RED	24VDC Supply
2	BLK	24VDC Return

Pin	Color	Signal
1	GRN	CAN H
2	YEL	CAN L
3	BARE	SHIELD

P1 DT06-3S — W9 SCADA 20/3 CanBus Cable — P2 DT06-3S

Pin	Color	Signal
1	GRN	CAN H
2	YEL	CAN L
3	BARE	SHIELD

Pin	Color	Signal
1	120 Ohm	
2	termination resistor	
3		

P1 DT06-3S — W10 SCADA

Pin	Color	Signal
1	RED	TSV HV

3/8 Ring Conn. — W11 Tractive System HV 2/0 Battery Cable — 3/8 Ring Conn.

Pin	Color	Signal
1	RED	TSV HV

Pin	Color	Signal
1	RED	TSV HV

3/8 Ring Conn. — W12 Tractive System HV 2/0 Battery Cable — P2 ITT Canon Line Drain

Pin	Color	Signal
1	RED	TSV HV

Pin	Color	Signal
1	BLK	CHGND

P1 TBA — W16 Grounding TBD/1 Cable — 8/32 Ring Conn.

Pin	Color	Signal
1	BLK	CHGND

P2 ITT Canon Line Drain — W15 Tractive System HV 2/0 Battery Cable — P1 ITT Canon Line Source

Pin	Color	Signal
1	RED	TSV HV

Pin	Color	Signal
1	RED	HVDC +
2	BLK	HVDC GND

P1 DT06-2S — W16 TSMP 16/2 Cable — 8/32 Ring Conn.

Pin	Color	Signal
1	RED	HVDC +
2	BLK	HVDC GND

Pin	Color	Signal
1	GRN	CAN H
2	YEL	CAN L

P1 2-Pin Conn. — W17 Motor controller canbus 20/3 CanBus Cable — P2 35-Pin Motor Cont. Conn.

Pin	Color	Signal
T	GRN	CAN H
B	YEL	CAN L
D		

Pin	Color	Signal
1	RED	ENB
2	WHT	RTN

P1 2-Pin Conn. — W18 TSV power supply enable 16/2 — P2 37-Pin D Conn.

Pin	Color	Signal
26	RED	ENB
19	WHT	RTN

Pin	
1	

P1 — W20 HDMI — P2

Pin	Color	Signal
1	BLK	GND
2	RED	0-5VDC Signal
3	BL	12VDC
4	ORG	FWD/REV Signal
5	YEL	Drive Signal
6	BRN	GIGAVAC Coil
7	RED/BLK	Coil Return
8	BL/BLK	Spare

P1 DT06-8S — W21 Control System TBD/8 Cable — P2 35-Pin Motor Cont. Conn.

Pin	Color	Signal
T	BLK	GND
B	RED	0-5VDC Signal
D	BL	12VDC
*	ORG	FWD/REV Signal
*	YEL	Drive Signal
*	BRN	GIGAVAC Coil
*	RED/BLK	Coil Return
*	BL/BLK	Spare

Pin	Color	Signal
1	RED	To E-Stop
2	BLK	From E-Stop
3	BL	To CReset
4	ORG	From CReset
5	WHT	Fault LED
6	GRN	AIRs LED
7	WHT/BLK	RTN GLV
8	RED/BLK	GLV Present LED
9	GRN/BLK	Safety Loop LED
10	OR/BLK	Spare
11	BL/BLK	Spare
12	BLK/WHT	Spare

P1 DT06-12S — W22 Control System TBD/12 Cable — Crimp Conn.

Pin	Color	Signal
1	WHT	Brake Light
2	BRN	Brake Light RTN
3	RED	TSAL Left
4	GRN	TSAL Left RTN
5	YEL	TSAL Right
6	BLK	TSAL Right RTN

P1 DT06-6S — W23 Control System TBD/6 Cable — 8/32 Ring Conn.

Pin	Color	Signal
1	BLK	Brake 5VDC +
2	RED	Brake Pressure
3	BL	Brake Over-Travel
4	ORG	APPS 1 5VDC +
5	YEL	APPS 1 Signal
6	BRN	APPS 2 5VDC +
7	RED/BLK	APPS 2 Signal
8	BL/BLK	RTN GLV

P1 DT06-8S — W24 Control System TBD/8 Cable — Misc. Conn.

This cable might need more connections TSI needs to decide. Suggestion, bring all pots back

Pin	Color	Signal
1	RED	To E-Stop
2	BLK	From E-Stop
3	BL	To CReset
4	ORG	From CReset
5	WHT	Fault LED
6	GRN	AIRs LED
7	WHT/BLK	RTN GLV
8	RED/BLK	GLV Present LED
9	GRN/BLK	Safety Loop LED
10	OR/BLK	Spare
11	BL/BLK	Spare
12	BLK/WHT	Spare

Pin	Color	Signal
1	WHT	Brake Light
2	BRN	Brake Light RTN
3	RED	TSAL Left
4	GRN	TSAL Left RTN
5	YEL	TSAL Right
6	BLK	TSAL Right RTN

Pin	Color	Signal
1	BLK	Brake 5VDC +
2	RED	Brake Pressure
3	BL	Brake Over-Travel
4	ORG	APPS 1 5VDC +
5	YEL	APPS 1 Signal
6	BRN	APPS 2 5VDC +
7	RED/BLK	APPS 2 Signal
8	BL/BLK	RTN GLV

Pin	Color	Signal
1	BLK	LV GND
2	RED	IMD Fault LED
3	BL	To Drive Button
4	ORG	From Drive Button
5	YEL	Pre-Charge LED
6	BRN	Drive LED
7	RED/BLK	HV Present LED
8	BL/BLK	Spare

P1 DT06-8S — W25 Control System TBD/8 Cable — Crimp Conn.

Pin	Color	Signal
1	RED	5V +
2	BLK	GND
3	GRN	Encoder B
4	WHT	Encoder A
5	YEL	GND
6	BRN	Motor Temp.

P1 DT06-6S — W26 Encoder/Temp. 22/6 Cable — P2 35-Pin Motor Cont. Conn.

Pin	Color	Signal
2*	RED	5V +
6*	BLK	GND
7*	GRN	Encoder B
3*	WHT	Encoder A
2*	YEL	GND
1*	BRN	Motor Temp

Pin	Color	Signal
1	WHT	LV GND
2	BRN	TS Energized Light
3	RED	Spare
4	GRN	Spare
5	YEL	Spare
6	BLK	Spare

P1 DT06-6S — W28 Control System TBD/6 Cable — 8/32 Ring Conn.

Pin	Color	Signal
1	TBA	???
2	TBA	???
3	TBA	???

P1 DT06-3S — W29 Pump TBA/3 Cable

Pin	Color	Signal
1	TBA	???
2	TBA	???
3	TBA	???

P1 DT06-3S — W30 Fan TBA/3 Cable

Pin	Color	Signal
1	BLK	LV GND
2	RED	IMD Fault LED
3	BL	To Drive Button
4	ORG	From Drive Button
5	YEL	Pre-Charge LED
6	BRN	Drive LED
7	RED/BLK	HV Present LED
8	BL/BLK	Spare

Pin	Color	Signal
2*	RED	5V +
6*	BLK	GND
7*	GRN	Encoder B
3*	WHT	Encoder A
2*	YEL	GND
1*	BRN	Motor Temp

Pin	Color	Signal
1	WHT	LV GND
2	BRN	TS Energized Light
3	RED	Spare
4	GRN	Spare
5	YEL	Spare
6	BLK	Spare

Pin	Color	Signal
1	TBA	???
2	TBA	???
3	TBA	???

Pin	Color	Signal
1	TBA	???
2	TBA	???
3	TBA	???

Pin numbers with a star are unverified

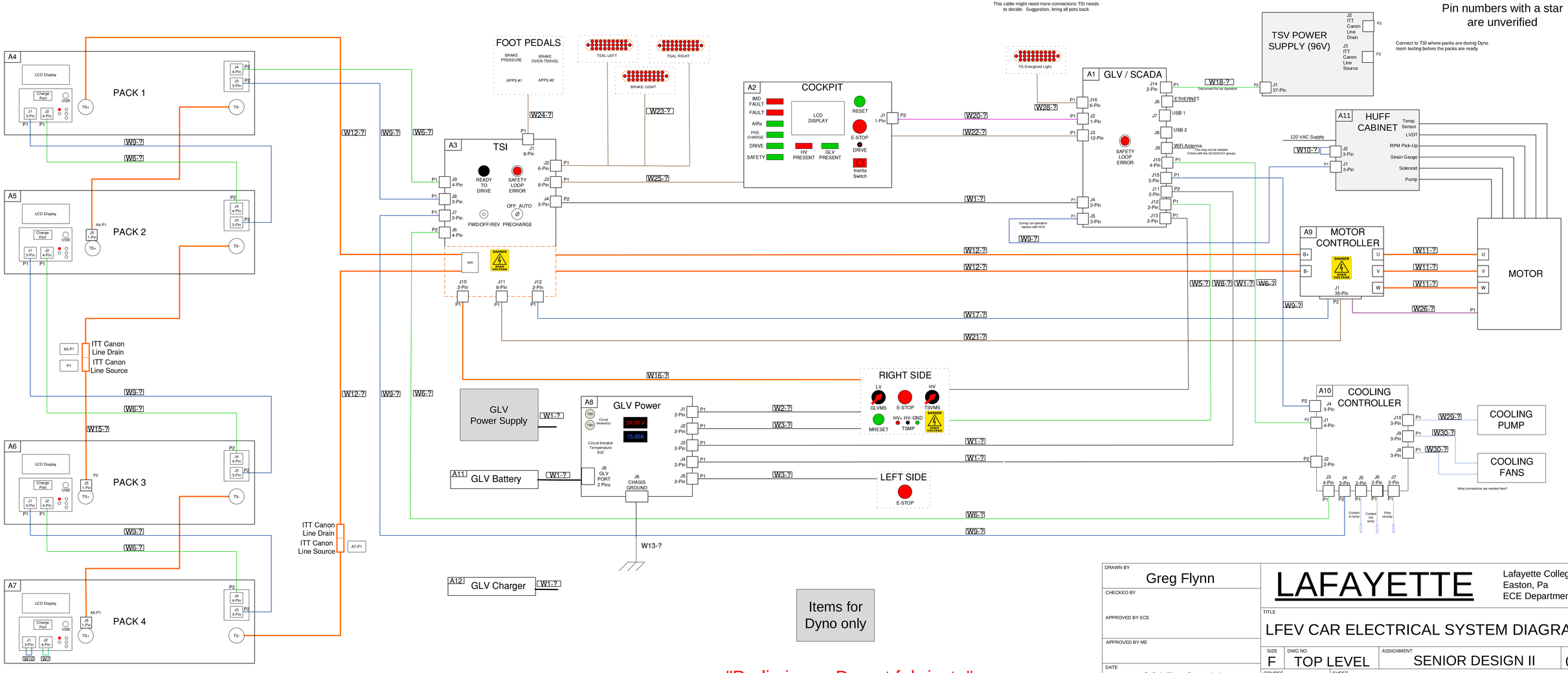

Items for Dyno only

"Preliminary, Do not fabricate"

DRAWN BY	Greg Flynn
CHECKED BY	
APPROVED BY ECE	
APPROVED BY ME	
DATE	2017 - 2 – 11

LAFAYETTE

Lafayette College
Easton, Pa
ECE Department

TITLE: LFEV CAR ELECTRICAL SYSTEM DIAGRAM

SIZE	DWG NO	ASSIGNMENT	REV
F	TOP LEVEL	SENIOR DESIGN II	0.3

COURSE	SHEET
TOP LEVEL	1 OF 1