STC micro™
宏 晶 科 技
Nantong guoxin Microelectronics Co., Ltd.

STC8F family of Micro-controllers Reference Manual

STC MCU

Technical support website：www.STCMCU.com / www.GXWMCU.com
Date of update：**2018/3/20**

Contents

1 Overview **1**
2 Features **2**
2.1 Features and Prices of STC8A8K64S4A12 family 2
2.2 Features and Prices of STC8A4K64S2A12 family 4
2.3 Features and Prices of STC8F2K64S4 family 6
2.4 Features and Prices of STC8F2K64S4 family 8
2.5 Features and Prices of STC8F1K08S2 family 10
2.6 Features and Prices of STC8H1K08S2A10 family 11
2.7 Advance notice of STC8H1K64S2A10 family 14
2.8 Advance notice of STC8H1K08S2 family 14
2.9 Advance notice of STC8H04A10 family 15
2.10 Advance notice of STC8H04 family 15
3 Pinouts and pin descriptions **16**
3.1 Pinouts 16
3.1.1 STC8A8K64S4A12 family pinouts 16
3.1.2 STC8A4K64S2A12 family pinouts 19
3.1.3 STC8F2K64S4 family pinouts 22
3.1.4 STC8F2K64S2 family pinouts 24
3.1.5 STC8F1K08S2 family pinouts 26
3.1.6 STC8H1K08S2A10 family pinouts 26
3.1.7 GX8S003 family pinouts 27
3.1.8 STC8H1K08S2 family pinouts 27
3.2 Pin descriptions 28
3.2.1 STC8A8K64S4A12 family pin descriptions 28
3.2.2 STC8A4K64S2A12 family pin descriptions 34
3.2.3 STC8F2K64S4 family pin descriptions 40
3.2.4 STC8F2K64S2 family pin descriptions 45
3.3 Function Pin Switch 48
3.3.1 Function pin related register 48
3.4 Sample Program 52
3.4.1 Serial 1 switch 52
3.4.2 Serial 2 switch 53
3.4.3 Serial 3 switch 53
3.4.4 Serial 4 switch 54
3.4.5 SPI switch 54
3.4.6 PWM switch 55
3.4.7 PCA/CCP/PWM switch 57
3.4.8 I2C switch 58
3.4.9 Comparator output switch 58

3.4.10 Master clock output switching 59
4 Package characteristics 61
4.1 LQFP64S package mechanical data（12mm*12mm） 61
4.2 LQFP64L package mechanical data（16mm*16mm） 62
4.3 LQFP48 package mechanical data（9mm*9mm） 63
4.4 LQFP44 package mechanical data（12mm*12mm） 66
4.5 LQFP32 package mechanical data（9mm*9mm） 69
4.6 QFN32 package mechanical data（4mm*4mm） 70
4.7 PDIP40 package mechanical data 71
4.8 TSSOP20 package mechanical data 72
4.9 SOP16 package mechanical data 73
5 STC8 seriesmicrocontroller selection price list 74
5.1 STC8 series of microcontroller package price list 75
5.2 STC8 series microcontroller name rule 76
6 ISP download and typical application circuit diagram 77
6.1 STC8F series ISP download application circuit diagram 77
6.1.1 Using RS-232 transferor download 77
6.1.2 Using PL2303-SA download 78
6.1.3 Using U8-Mini tool download 78
6.1.4 Using U8W tool download 79
6.1.5 USB directly ISP download 80
6.2 STC8A series ISP download application circuit diagram 81
6.2.1 Using RS-232 transfer download(using high-precision ADC) 81
6.2.2 Using RS-232 transfer download (ADC general application) 82
6.2.3 Using PL2303 download 83
6.2.4 Using U8-Mini tool download 84
6.2.5 Using U8W tool download 85
6.2.6 USB directly ISP download 86
7 clock、reset and power management 87
7.1 System clock control 87
7.2 System reset 89
7.3 System power management 92
7.4 Sample program 93
7.4.1 Select system clock source 93
7.4.2 Master clock frequency division output 95
7.4.3 Watchdog timer application 96
7.4.4 Soft reset to implement custom Downloads 96
7.4.5 Low voltage detection 97
7.4.6 Power saving mode 98
7.4.7 Wake-up MCU with INT0/INT1/INT2/INT3/INT4 interrupt 100
7.4.8 Wake-up MCU with T0/T1/T2/T3/T4 interrupts 102
7.4.9 Wake-up MCU with RxD/RxD2/RxD3/RxD4 interrupt 106
7.4.10 Wake-up MCU with LVD interrupt 108
7.4.11 Wake-up MCU with CCP0/CCP1/CCP2/CCP3 interrupt 110

STCMCU

7.4.12 CMP interrupt wake-up MCU 112
7.4.13 Using LVD function to detect working Voltage(cell voltage) 114
8 Memory 118
8.1 Program Memory 118
8.2 Data Memory 119
8.2.1 Internal RAM 119
8.2.2 Internal extended RAM 121
8.2.3 External extended RAM 122
8.3 Special Parameters in Memory 123
8.3.1 Read the Bandgap voltage (Read from ROM) 125
8.3.2 Read the Bandgap voltage (Read from RAM) 127
8.3.3 Read the global unique ID number (Read from ROM) 129
8.3.4 Read the global unique ID number (Read from RAM) 131
8.3.5 Read the frequency of the 32K power down wake-up timer (Read from ROM) 134
8.3.6 Read the frequency of the 32K power down wake-up timer (Read from RAM) 136
8.3.7 Manually set the internal IRC frequency (Read from ROM 138
8.3.8 Manually set the internal IRC frequency(Read from RAM) 140
9 Special Function Register 142
9.1 Series of STC8A8K64S4A12 142
9.2 Series of STC8A4K64S2A12 143
9.3 Series of STC8F2K64S4 144
9.4 Series of STC8F2K64S2 145
9.5 List of Special Function Registers 146
10 I/O Ports 153
10.1 I/O port related registers 153
10.2 I/O Ports Configurations 156
10.3 I/O ports structure 158
10.3.1 Quasi-Bidirectional I/O (weak pull-up) 158
10.3.2 Push-Pull Output 158
10.3.3 High-Impedance 159
10.3.4 Open-Drain Output 159
10.4 Instructions about special I / O ports 160
10.4.1 P2.0 / RSTCV 160
10.4.2 I / O ports related to PWM 160
10.5 Sample programs 160
10.5.1 Mode configure of the ports 160
10.5.2 Read and write operations on bidirectional port 162
11 Instruction Set 163
12 Interrupt System 167
12.1 Interrupt Sources of STC8F family 167
12.1.1 Interrupt Sources of STC8F8K64S4A10 series 168
12.1.2 Interrupt Sources of STC8A8K64S4A12 series 169
12.1.3 Interrupt Sources of STC8F2K64S4 series 169
12.1.4 Interrupt Sources of STC8F2K64S4 series 169

STC MCU

12.2 Interrupt Structure Diagrams of STC8F family 170
12.3 Interrupt List of STC8F family microcontrollers 171
12.4 Interrupt Related Registers 173
12.4.1 Interrupt Enable Control Registers (interrupt Enable bits) 174
12.4.2 Interrupt Request Registers (interrupt flags) 178
12.4.3 Interrupt Priority Control Registers 180
12.5 Demo codes 182
12.5.1 INT0 interrupt(rising and falling edges) 182
12.5.2 INT0 interrupt(falling edge) 183
12.5.3 INT1 interrupt(rising and falling edges) 184
12.5.4 INT1 interrupt(falling edge) 185
12.5.5 INT2 interrupt(falling edge) 186
12.5.6 INT3interrupt(falling edge) 187
12.5.7 INT4 interrupt(falling) 188
12.5.8 timer0 interrupt 189
12.5.9 Timer1 interrupt 190
12.5.10 Timer2 interrupt 191
12.5.11 Timer3 interrupt 192
12.5.12 Timer4 interrupt 193
12.5.13 UART1 interrupt 194
12.5.14 UART2 interrupt 196
12.5.15 UART3 interrupt 197
12.5.16 UART4 interrupt 199
12.5.17 ADC interrupt 201
12.5.18 LVD interrupt 202
12.5.19 PCA interrupt 203
12.5.20 SPI interrupt 205
12.5.21 CMP interrupt 206
13 Timer/Counter 213
13.1 Timer Related Registers 213
13.2 Timer 0/1 214
13.3 Timer 2 217
13.4 Timer 3/4 217
13.5 Power-Down Wake-Up Special Timer 219
13.6 Demo code 220
13.6.1 Timer 0(Automatic reloading of mode 0－16 bit) 220
13.6.2 Timer 0(Non automatic reloading of mode 1－16 bit) 221
13.6.3 Timer 0(Automatic reloading of mode 2－8 bit) 222
13.6.4 Timer 0(Automatic reloading of non-maskable interrupt for mode 2－8 bit) 223
13.6.5 Timer 0(External counting－set T0 as external interrupt of falling edge) 224
13.6.6 Timer 0(Test pulse width－the width of high level for INT0) 225
13.6.7 Timer 0(Clock divider output) 226
13.6.8 Timer 1(Automatic reloading of mode 0－16 bit) 227
13.6.9 Timer 1(Non automatic reloading of mode 1－16 bit) 228

STCMCU

13.6.10 Timer 1(Automatic reloading of mode 2－8 bit) 229
13.6.11 Timer 1(External counting－set T1 as external interrupt of falling edge) 230
13.6.12 Timer 1(Test pulse width－the width of high level for INT1) 231
13.6.13 Timer 1(clock divider output) 232
13.6.14 Configure Timer 1(mode 0)as Baud Rate Generate of serial port 1 233
13.6.15 Configure Timer 1(mode 2) as Baud Rate Generate of serial port 1 236
13.6.16 Timer 2 (Automatic reloading for 16 bits) 239
13.6.17 Timer 2 (External counting－set T2 as external interrupt of falling edge) 240
13.6.18 Timer 2(clock divider output) 241
13.6.19 Configure Timer 2 as Baud Rate Generate of serial port 1 242
13.6.20 Configure Timer 2 as Baud Rate Generate of serial port 2 245
13.6.21 Configure Timer 2 as Baud Rate Generate of serial port 3 248
13.6.22 Configure Timer 2 as Baud Rate Generate of serial port 4 251
13.6.23 Timer 3(Automatic reloading for 16 bits) 255
13.6.24 Timer 3(External counting－set T3 as the external interrupt for falling edge) 256
13.6.25 Timer 3(clock divider output) 257
13.6.26 Configure Timer 3 as Baud Rate Generate of serial port 3 258
13.6.27 Timer4 (Automatic reloading for 16 bits) 261
13.6.28 Timer4 (External counting－set T4 as the external interrupt for falling edge) 262
13.6.29 Timer4(clock divider output) 264
13.6.30 Configure Timer 4 as Baud Rate Generate of serial port 4 264
14 Serial Port (UART) Communication 268
14.1 Serial Port Related Registers 268
14.2 Serial Port 1 268
14.2.1 Serial Port 1 Mode 0 270
14.2.2 Serial Port 1 Mode 1 272
14.2.3 Serial Port 1 Mode 2 274
14.2.4 Serial Port 1 Mode 3 275
14.2.5 Automatic Address Recognition 276
14.3 Serial Port 2 277
14.3.1 Serial Port 2 Mode 0 278
14.3.2 Serial Port 2 Mode 1 279
14.4 Serial Port 3 279
14.4.1 Serial Port 3 Mode 0 280
14.4.2 Serial Port 3 Mode 1 281
14.5 Serial Port 4 282
14.5.1 Serial Port 4 Mode 0 283
14.5.2 Serial Port 4 Mode 1 284
14.6 Precautions for Serial Port 285
14.7 Demo code 286
14.7.1 Serial port 1 use timer 2 as Baud Rate Generator 286
14.7.2 Serial port 1 use timer 1 as Baud Rate Generator(MODE 0) 289
14.7.3 Serial port 1 use timer 1 as Baud Rate Generator(MODE 2) 292
14.7.4 Serial port 2 use timer 2 as Baud Rate Generator 295

14.7.5 Serial port 3 use timer 2 as Baud Rate Generator 298
14.7.6 Serial port 3 use timer 3 as Baud Rate Generator 301
14.7.7 Serial port 4 use timer 2 as Baud Rate Generator 304
14.7.8 Serial port 4 use timer 4 as Baud Rate Generator 307
15 Comparator,brown-out detection,internal fixed comparison voltage....311
15.1 Internal Structure of Comparator 311
15.2 Registers related to comparator 311
15.3 Demo code 313
15.3.1 Use of comparators(interrupt way) 313
15.3.2 Use of comparators(search way) 315
15.3.3 Configure Comparator as External Brown-out Detection 317
15.3.4 Comparator detects operating voltage (battery voltage) 319
16 IAP/EEPROM 323
16.1 EEPROM Related Registers 323
16.2 Important Notes on EEPROM Programming and Erase Waiting Time 325
16.3 Demo code 326
16.3.1 Basic operation for EEPROM 326
16.3.2 Using the Serial Port to Send EEPROM Data....329
17 Analog to Digital Converter (ADC) 333
17.1 ADC Related Registers 333
17.2 ADC Typical application circuit diagram 335
17.2.1 High precision ADC application 335
17.2.2 ADC General Application (Applications with Low Accuracy ADC Requirements)....336
17.3 Sample program 336
17.3.1 ADC basic operation (Query Mode) 336
17.3.2 ADC basic operation(Interrupt Mode) 338
17.3.3 Format the ADC conversion result....339
17.3.4 Using ADC Channel 16 to Measure External Voltage or Battery Voltage 341
18 Application of PCA/CCP/PWM application 344
18.1 PCA Related register....344
18.2 PCA Operation Mode....347
18.2.1 Capture Mode....347
18.2.2 Software Timer Mode 348
18.2.3 High Speed pulse Output Mode 348
18.2.4 Pulse Width Modulator Mode (PWM mode) 349
18.3 Sample program 352
18.3.1 PCA outputs PWM(6/7/8/10 bit)....352
18.3.2 PCA Capture measurement pulse width....354
18.3.3 PCA implements 16-bit software timing 357
18.3.4 PCA Output high speed pulse 360
18.3.5 PCA extends external interrupt 362
19 Enhanced PWM....365
19.1 PWM Related Registers....365
19.2 Sample program 371

19.2.1 Output waveforms of any period and arbitrary duty cycle 371
19.2.2 Two PWMs Complementary Symmetric Waveform with Dead-time Control 374
19.2.3 PWM to achieve gradient light (breath light) 377
20 Sysnchronous Serial Peripheral Interface (SPI) 383
20.1 SPI Related Registers 383
20.2 SPI Communication Modes 384
20.2.1 Single Master and Single Slave Mode 384
20.2.2 Dual Devices Configuration Mode 385
20.2.3 Single Master and Multiple Slaves Mode 385
20.3 SPI Configuration 386
20.4 Data Pattern 388
20.5 Sample program 389
20.5.1 SPI Single Master and Single Slave System host program(interrupt mode) 389
20.5.2 SPI Single Master and Single Slave System slave program(Single Master and Single Slave) 391
20.5.3 SPI Single Master and Single Slave System host program(Query mode) 392
20.5.4 SPI Single Master and Single Slave System host program(Query mode) 393
20.5.5 SPI Mutual master-slave system program(interrupt mode) 394
20.5.6 SPI Mutual master-slave system program(Query mode) 396
21 I^2C Bus 399
21.1 I^2C Related Registers 399
21.2 I^2C Master Mode 399
21.3 I^2C Slave Mode 403
21.4 Sample program 405
21.4.1 I^2C master mode access AT24C256(interrupt mode) 405
21.4.2 I^2C master mode access AT24C256(Query mode) 411
21.4.3 I^2C master mode access PCF8563 415
21.4.4 I^2C Slave Mode(interrupt mode) 420
21.4.5 I^2CSlave Mode(Query mode) 424
21.4.6 Host code for testing I2C slave mode code 427
22 Enhanced double data pointer 432
22.1 Sample program 434
22.1.1 Example code 1 434
22.1.2 Example code 2 434
Appendix A Application Considerations 436
Appendix B STC Guide to the use of simulators 445
Appendix C STC-USB Driver installation instructions 449
Appendix D Electrical Character 495
Appendix E Update Log 498

1 Overview

STC8F family of MCUs are single clock/machine cycle (which is also called 1T) microcontrollers produced by STC Co. Ltd. It is a new generation of 8051 core MCU with wide voltage range, high speed, high reliability, low power and super strong anti- interference. STC8F family of MCUs use STC ninth generation encryption technology so that they can not be decrypted. They have a fully compatible instruction set with traditional 8051 family of microcontroller. With the enhancedkernel, STC8F family of MCUs are faster than the traditional 8051 MCU at about 11.2~13.2 times.

High precision of ±0.3% R/C clock is integrated in MCU with ±1% temperature drift under the temperature range of -40°C to +85°C, and ±0.6% temperature drift under normal temperature range from -20°C to +65°C. The frequency of RC clock can be set from 5MHz to 30MHz when programming a MCU using ISP. Moreover, high reliable reset circuit with 4 level optional reset threshold voltage is integrated in MCU. So, external expensive crystal and the external reset circuit can be eliminated completely.

There are three optional clock sources inside the MCU, internal 24MHz high precision IRC, internal 32KHz low speed IRC, external 4MHz~33MHz oscillator or external clock signal. The clock source can be freely chosen in the user code. After the clock source is selected, it can be 8-bit divided freely, and then be supplied to the CPU and the peripherals.

Two low power modes are provided in MCU: the IDLE mode and the STOP mode. In IDLE mode, CPU stops executing instructions, but all peripherals are still working. At this moment, the power consumption is about 1.5mA at 6MHz working frequency. The STOP mode is the power off mode. At this momont, the CPU and all peripherals stop working, and the power consumption can be reduced to about 0.1uA.

Rich digital peripherals and analog peripherals are provided in MCU, including 4 serial ports, 5 timers, 4 sets of PCA, 8 groups of enhanced PWM and I2C, SPI, 16 channels 12 bit ADC and comparator, which can meet almost all the needs of users when designing a product.

The enhanced dual data pointers are integrated in the STC8F family of microcontrollers. Using program control, the function of automatic increasing or decreasing of data pointer and automatic switching of two sets of data pointers can be realized.

Product	UART	Timers	ADC	Enhanced PWM	PCA	Comparator	I^2C	SPI
STC8F8K64S4A10	●	●	●	●	●	●	●	●
STC8A8K64S4A12	●	●	●	●	●	●	●	●
STC8F2K64S4	●	●			●	●	●	●

2 Features

2.1 Features and Prices of STC8A8K64S4A12 family

✓ **Prices of different selections**

Microcontroller Model	Operating Voltage(V)	Flash Program Memory 100K times bytes	Large Capacity Expansion SRAM bytes	Powerful dual DPTR Increase or Decrease	EEPROM 100K times bytes	I/O maximum number	Serial ports Power-down wake-up	SPI	I²C	Timer/Counter(External Pow-down Wake-up)	16 bits advanced PWM Timers	15 bits Enhanced PWM(Dead Zone Control)	PCA/CCP/PWM(can be external interrupt)	Power-down wake-up timer	15 High speed ADC(8 PWM as 8D/A use)	Comparators(1 A/D˜ ext brownout detection)	Internal Low-vol Detection interrupt Pow-wk	Watchdog Reset timer	Internal Reset(optional reset threshold vol)	Internal Clock(24MHz Adjustable)	External clock output and reset	Program encrypted transmission	Set password for next update procedure	Support RS485 download	Support USB download	Online simulation	Footprint						2017 new product inf
																											LQFP64S	QFN64 <8x8mm>	LQFP48	QFN48 <6x6mm>	LQFP44	PDIP40	
STC8A8K16S4A12	2.0-5.5	16K	8K	2	48K	59	4	Yes	Yes	5	-	8	4	Yes	12 位	Yes	Yes	Yes	4lev	Yes	Yes	Yes	Yes	Yes	Yes	Yes	¥3.4		¥3.2		¥3.2		Large Supply
STC8A8K32S4A12	2.0-5.5	32K	8K	2	32K	59	4	Yes	Yes	5	-	8	4	Yes	12 位	Yes	Yes	Yes	4lev	Yes	Yes	Yes	Yes	Yes	Yes	Yes	¥3.6		¥3.3		¥3.3		
STC8A8K60S4A12	2.0-5.5	60K	8K	2	4K	59	4	Yes	Yes	5	-	8	4	Yes	12 位	Yes	Yes	Yes	4lev	Yes	Yes	Yes	Yes	Yes	Yes	Yes	¥3.8		¥3.4		¥3.4		
STC8A8K64S4A12	2.0-5.5	64K	8K	2	IAP	59	4	yes	Yes	5	-	8	4	Yes	12 位	Yes	Yes	Yes	4lev	Yes	Yes	Yes	Yes	Yes	Yes	Yes	¥3.8		¥3.4		¥3.4		

✓ **Core**
- ✓ Enhanced 8051 Core with single clock per machine cycle (1T)
- ✓ Fully compatible instruction set with traditional 8051
- ✓ 22 interrupt sources and 4 interrupt priority levels
- ✓ Online debugging is supported

✓ **Operating voltage**
- ✓ 2.0 to 5.5V
- ✓ Built-in LDO

✓ **Operating temperature**
- ✓ -40°C~85°C

✓ **Flash memory**
- ✓ Up to 64Kbytes of Flash memory to be used to store user code
- ✓ Configurable EEPROM size, 512bytes single page erased, can be repeatedly erased more than 100 thousand times.
- ✓ In-System-Programming, ISP in short, can be used to update the application code, no need for programmer.
- ✓ Online debugging with single chip is supported, and no emulator is needed. The number of breakpoints is unlimited theoretically.

- **SRAM**
  - 128 bytes internal direct access RAM
  - 128 bytes internal indirect access RAM
  - 8192 bytes internal extended RAM
  - RAM expandable externally up to 64 Kbytes
- **Clock**
  - Internal 24MHz high precise R/C clock IRC
    - Error: ±0.3%
    - Temperature drift: ±1.0% at the temperature range of -40°C to 85°C and ±0.6% at the temperature range of -20°C to 65°C
  - Internal 32KHz low speed IRC with large error
  - External 4MHz~33MHz oscillator or external clock

    The three clock source above can be selected freely by used code.
- **Reset**
  - Hardware reset
    - Power-on reset
    - Reset by reset pin with high reset pulse
    - Watch dog timer reset
    - Low voltage detection reset. 4 low voltage detection levels are provided, 2.2V, 2.4V, V2.7, V3.0
  - Software reset
    - Writing the reset trigger register using software
- **Interrupts**
  - 22 interrupt sources: INT0, INT1, INT2, INT3, INT4, timer0, timer1, timer2, timer3, timer4, uart1, uart2, uart3, uart4, ADC, LVD, PCA/CCP, SPI, I^2C, comparator, enhanced PWM, enhanced PWM fault detection
  - 4 interrupt priority levels
- **Digital peripherals**
  - 5 16-bit timers: timer0, timer1, timer2, timer3, timer4. Where the mode 3 of timer0 has the Non Maskable Interrupt (NMI in short) function. Mode 0 of timer0 and timer1 is 16-bit Auto-reload mode.
  - 4 high speed UARTs: uart1, uart2,uart3, uart4, whose baud rate clock source may be fast as FOSC/4
  - 4 groups of PCA: CCP0, CCP1, CCP2, CCP3, which can be used as capture, high speed output and 6-bits, 7-bits, 8-bits or 10-bits PWM
  - 8 groups of 15 bit enhanced PWM. Control signal with dead zone can be realized, and external fault detection function is supported.
  - SPI: Master mode, slave mode or master/slave automatic switch mode are supported.
  - I^2C: Master mode or slave mode are supported.
- **Analog peripherals**
  - ADC: 16 channels 10 bit ADC
  - Comparator
- **GPIO**
  - Up to 62 GPIOs: P0.0~P0.7, P1.0~P1.7, P2.0~P2.7, P3.0~P3.7, P4.0~P4.7, P5.0~P5.5,

STCMCU

P6.0~P6.7, P7.0~P7.7

- ✓ 4 modes for all GPIOs: quasi-bidirectional mode, push-pull output mode, open drain mode, high-impedance input mode

✓ **Package**

- ✓ LQFP64, LQFP48, LQFP44

2.2 Features and Prices of STC8A4K64S2A12 family

✓ **Prices of different selections**

Microcontroller Model	Operating Voltage(V)	Flash Program Memory 100K times bytes	Large Capacity Expansion SRAM bytes	Powerful dual DPTR Increase or Decrease	EEPROM 100K times bytes	I/O maximum number	Serial ports Power-down wake-up	SPI	I²C	Timer/Counter(External Pow-down Wake-up)	16 bits advanced PWM Timers	15 bits Enhanced PWM(Dead Zone Control)	PCA/CCP/PWM(can be external interrupt)	Power-down wake-up timer	15 High speed ADC(8 PWM as 8 D/A use)	Comparators(1 A/D、ext brownout detection)	Internal Low-vol Detection interrupt Pow-wk	Watchdog Reset timer	Internal Reset(optional reset threshold vol)	Internal Clock(24MHz Adjustable)	External clock output and reset	Program encrypted transmission	Set password for next update procedure	Support RS485 download	Support USB download	Online simulation	Footprint						2017 new product inf
																											LQFP64S	QFN64 <8x8mm>	LQFP48	QFN48 <6x6mm>	LQFP44	PDIP40	
STC8A4K16S2A12	2.0-5.5	16K	4K	2	48K	59	2	Yes	Yes	5	-	8	4	Yes	12b	Yes	Yes	Yes	4lev	Yes	Yes	Yes	Yes	Yes	Yes	Yes	¥3.1		¥2.9		¥2.9		Large Supply
STC8A4K32S2A12	2.0-5.5	32K	4K	2	32K	59	2	Yes	Yes	5	-	8	4	Yes	12b	Yes	Yes	Yes	4lev	Yes	Yes	Yes	Yes	Yes	Yes	Yes	¥3.3		¥3.0		¥3.0		
STC8A4K60S2A12	2.0-5.5	60K	4K	2	4K	59	2	Yes	Yes	5	-	8	4	Yes	12b	Yes	Yes	Yes	4lev	Yes	Yes	Yes	Yes	Yes	Yes	Yes	¥3.6		¥3.2		¥3.2		
STC8A4K64S2A12	2.0-5.5	64K	4K	2	IAP	59	2	Yes	Yes	5	-	8	4	Yes	12b	Yes	Yes	Yes	4lev	Yes	Yes	Yes	Yes	Yes	Yes	Yes	¥3.6		¥3.2		¥3.2		

✓ **Core**

- ✓ Enhanced 8051 Core with single clock per machine cycle (1T)
- ✓ Fully compatible instruction set with traditional 8051
- ✓ 22 interrupt sources and 4 interrupt priority levels
- ✓ Online debugging is supported

✓ **Operating voltage**

- ✓ 2.0 to 5.5V
- ✓ Built-in LDO

✓ **Operating temperature**

- ✓ -40°C~85°C

✓ **Flash memory**

- ✓ Up to 64Kbytes of Flash memory to be used to store user code
- ✓ Configurable EEPROM size, 512bytes single page erased, can be repeatedly erased more than 100 thousand times.
- ✓ In-System-Programming, ISP in short, can be used to update the application code, no need for programmer.

- ✓ Online debugging with single chip is supported, and no emulator is needed. The number of breakpoints is unlimited theoretically.

- ✓ **SRAM**
  - ✓ 128 bytes internal direct access RAM
  - ✓ 128 bytes internal indirect access RAM
  - ✓ 8192 bytes internal extended RAM
  - ✓ RAM expandable externally up to 64 Kbytes
- ✓ **Clock**
  - ✓ Internal 24MHz high precise R/C clock IRC
    - ⌖ Error: ±0.3%
    - ⌖ Temperature drift: ±1.0% at the temperature range of -40℃ to 85℃ and ±0.6% at the temperature range of -20℃ to 65℃
  - ✓ Internal 32KHz low speed IRC with large error
  - ✓ External 4MHz~33MHz oscillator or external clock
    The three clock source above can be selected freely by used code.
  - ✓ Hardware reset
    - ⌖ Power-on reset
    - ⌖ Reset by reset pin with high reset pulse
    - ⌖ Watch dog timer reset
    - ⌖ Low voltage detection reset. 4 low voltage detection levels are provided, 2.2V, 2.4V, V2.7, V3.0
  - ✓ Software reset
    - ⌖ Writing the reset trigger register using software
- ✓ **Interrupts**
  - ✓ 22 interrupt sources: INT0, INT1, INT2, INT3, INT4, timer0, timer1, timer2, timer3, timer4, uart1, uart2, uart3, uart4, ADC, LVD, PCA/CCP, SPI, I^2C, comparator, enhanced PWM, enhanced PWM fault detection
  - ✓ 4 interrupt priority levels
- ✓ **Digital peripherals**
  - ✓ 5 16-bit timers: timer0, timer1, timer2, timer3, timer4. Where the mode 3 of timer0 has the Non Maskable Interrupt (NMI in short) function. Mode 0 of timer0 and timer1 is 16-bit Auto-reload mode.
  - ✓ 4 high speed UARTs: uart1, uart2,uart3, uart4, whose baud rate clock source may be fast as FOSC/4
  - ✓ 4 groups of PCA: CCP0, CCP1, CCP2, CCP3, which can be used as capture, high speed output and 6-bits, 7-bits, 8-bits or 10-bits PWM
  - ✓ 8 groups of 15 bit enhanced PWM. Control signal with dead zone can be realized, and external fault detection function is supported.
  - ✓ SPI: Master mode, slave mode or master/slave automatic switch mode are supported.
  - ✓ I^2C: Master mode or slave mode are supported.
- ✓ **Analog peripherals**
  - ✓ ADC: 16 channels 12 bit ADC
  - ✓ Comparator
- ✓ **GPIO**

- ✓ Up to 59 GPIOs: P0.0~P0.7, P1.0~P1.7, P2.0~P2.7, P3.0~P3.7, P4.0~P4.4, P5.0~P5.5, P6.0~P6.7, P7.0~P7.7
- ✓ 4 modes for all GPIOs: quasi-bidirectional mode, push-pull output mode, open drain mode, high-impedance input mode

✓ **Package**

- ✓ LQFP64, LQFP48, LQFP44

2.3 Features and Prices of STC8F2K64S4 family

✓ **Prices of different selections**

Microcontroller Model	Operating Voltage(V)	Flash Program Memory 100K times bytes	Large Capacity Expansion SRAM bytes	Powerful dual DPTR Increase or Decrease	EEPROM 100K times bytes	I/O maximum number	Serial ports Power-down wake-up	SPI	I²C	Timer/Counter(External Pow-down Wake-up)	16 bits advanced PWM Timers	15 bits Enhanced PWM(Dead Zone Control)	PCA/CCP/PWM(can be external interrupt)	Power-down wake-up timer	15 High speed ADC(8 PWM as 8D/A use)	Comparators(1 A/D ext brownout detection)	Internal Low-vol Detection interrupt Pow-wk	Watchdog Reset timer	Internal Reset(optional reset threshold vol)	Internal Clock(24MHz Adjustable)	External clock output and reset	Program encrypted transmission	Set password for next update procedure	Support RS485 download	Support USB download	Online simulation	Footprint						2017 new product inf
																											LQFP64S	QFN64 <8x8mm>	LQFP48	QFN48 <6x6mm>	LQFP44	PDIP40	
STC8F2K16S4	2.0-5.5	16K	2K	2	48K	42	4	Yes	Yes	5	-	-	-	Yes	-	Yes	Yes	Yes	4 lev	Yes	Yes	Yes	Yes	Yes	Yes	Yes	¥2.7	¥2.6						Large Supply
STC8F2K32S4	2.0-5.5	32K	2K	2	32K	42	4	Yes	Yes	5	-	-	-	Yes	-	Yes	Yes	Yes	4 lev	Yes	Yes	Yes	Yes	Yes	Yes	Yes	¥2.8	¥2.7						
STC8F2K60S4	2.0-5.5	60K	2K	2	4K	42	4	Yes	Yes	5	-	-	-	Yes	-	Yes	Yes	Yes	4 lev	Yes	Yes	Yes	Yes	Yes	Yes	Yes	¥2.9	¥2.8						
STC8F2K64S4	2.0-5.5	64K	2K	2	IAP	42	4	Yes	Yes	5	-	-	-	Yes	-	Yes	Yes	Yes	4 lev	Yes	Yes	Yes	Yes	Yes	Yes	Yes	¥2.9	¥2.8						

✓ **Core**

- ✓ Enhanced 8051 Core with single clock per machine cycle (1T)
- ✓ Fully compatible instruction set with traditional 8051
- ✓ 19 interrupt sources and 4 interrupt priority levels
- ✓ Online debugging is supported

✓ **Operating voltage**

- ✓ 2.0 to 5.5V
- ✓ Built-in LDO

✓ **Operating temperature**

- ✓ -40°C~85°C

✓ **Flash memory**

- ✓ Up to 64Kbytes of Flash memory to be used to store user code
- ✓ Configurable EEPROM size, 512bytes single page erased, can be repeatedly erased more than 100 thousand times.
- ✓ In-System-Programming, ISP in short, can be used to update the application code, no need for

programmer.

- ✓ Online debugging with single chip is supported, and no emulator is needed. The number of breakpoints is unlimited theoretically.

- ✓ **SRAM**
  - ✓ 128 bytes internal direct access RAM
  - ✓ 128 bytes internal indirect access RAM
  - ✓ 2048 bytes internal extended RAM
  - ✓ RAM expandable externally up to 64 Kbytes
- ✓ **Clock**
  - ✓ Internal 24MHz high precise R/C clock IRC
    - Error: ±0.3%
    - Temperature drift: ±1.0% at the temperature range of -40°C to 85°C and ±0.6% at the temperature range of -20°C to 65°C
  - ✓ Internal 32KHz low speed IRC with large error
  - ✓ External 4MHz~33MHz oscillator or external clock

    The three clock source above can be selected freely by used code.
- ✓ **Reset**
  - ✓ Hardware reset
    - Power-on reset
    - Reset by reset pin with high reset pulse
    - Watch dog timer reset
    - Low voltage detection reset. 4 low voltage detection levels are provided, 2.2V, 2.4V, V2.7, V3.0
  - ✓ Software reset
    - Writing the reset trigger register using software
- ✓ **Interrupts**
  - ✓ 19 interrupt sources: INT0, INT1, INT2, INT3, INT4, timer0, timer1, timer2, timer3, timer4, uart1, uart2, uart3, uart4, LVD, PCA/CCP, SPI, I^2C, comparator
  - ✓ 4 interrupt priority levels
- ✓ **Digital peripherals**
  - ✓ 5 16-bit timers: timer0, timer1, timer2, timer3, timer4. Where the mode 3 of timer0 has the Non Maskable Interrupt (NMI in short) function. Mode 0 of timer0 and timer1 is 16-bit Auto-reload mode.
  - ✓ 4 high speed UARTs: uart1, uart2,uart3, uart4, whose baud rate clock source may be fast as FOSC/4
  - ✓ 4 groups of PCA: CCP0, CCP1, CCP2, CCP3, which can be used as capture, high speed output and 6-bits, 7-bits, 8-bits or 10-bits PWM
  - ✓ SPI: Master mode, slave mode or master/slave automatic switch mode are supported.
  - ✓ I^2C: Master mode or slave mode are supported.
- ✓ **Analog peripherals**
  - ✓ Comparator
- ✓ **GPIO**
  - ✓ Up to 42 GPIOs: P0.0~P0.7, P1.0~P1.7, P2.0~P2.7, P3.0~P3.7, P4.0~P4.7, P5.4~P5.5
  - ✓ 4 modes for all GPIOs: quasi-bidirectional mode, push-pull output mode, open drain mode,

high-impedance input mode

- ✓ **Package**
  - ✓ LQFP44, PDIP40

2.4 Features and Prices of STC8F2K64S4 family

- ✓ **Prices of different selections**

Microcontroller Model	Operating Voltage(V)	Flash Program Memory 100K times bytes	Large Capacity Expansion SRAM bytes	Powerful dual DPTR Increase or Decrease	EEPROM 100K times bytes	I/O maximum number	Serial ports Power-down wake-up	SPI	I^2C	Timer/Counter(External Pow-down Wake-up)	16 bits advanced PWM Timers	15 bits Enhanced PWM(Dead Zone Control)	PCA/CCP/PWM(can be external interrupt)	Power-down wake-up timer	15 High speed ADC(8 PWM as 8D/A use)	Comparators(1 A/D ext brownout detection)	Internal Low-vol Detection interrupt Pow-wk	Watchdog Reset timer	Internal Reset(optional reset threshold vol)	Internal Clock(24MHz Adjustable)	External clock output and reset	Program encrypted transmission	Set password for next update procedure	Support RS485 download	Support USB download	Online simulation	Footprint							2017 new product inf
																											LQFP64S	QFN64 <8x8mm>	LQFP48	QFN48 <6x6mm>	LQFP44	PDIP40		
STC8F2K16S4	2.0-5.5	16K	2K	2	48K	42	4	Yes	Yes	5	-	-	-	Yes	-	Yes	Yes	Yes	4 lev	Yes	Yes	Yes	Yes	Yes	Yes	Yes	¥2.7	¥2.6						Start Supply
STC8F2K32S4	2.0-5.5	32K	2K	2	32K	42	4	Yes	Yes	5	-	-	-	Yes	-	Yes	Yes	Yes	4l ev	Yes	Yes	Yes	Yes	Yes	Yes	Yes	¥2.8	¥2.7						
STC8F2K60S4	2.0-5.5	60K	2K	2	4K	42	4	Yes	Yes	5	-	-	-	Yes	-	Yes	Yes	Yes	4 lev	Yes	Yes	Yes	Yes	Yes	Yes	Yes	¥2.9	¥2.8						
STC8F2K64S4	2.0-5.5	64K	2K	2	IAP	42	4	Yes	Yes	5	-	-	-	Yes	-	Yes	Yes	Yes	4 lev	Yes	Yes	Yes	Yes	Yes	Yes	Yes	¥2.9	¥2.8						

- ✓ **Core**
  - ✓ Enhanced 8051 Core with single clock per machine cycle (1T)
  - ✓ Fully compatible instruction set with traditional 8051
  - ✓ 19 interrupt sources and 4 interrupt priority levels
  - ✓ Online debugging is supported
- ✓ **Operating voltage**
  - ✓ 2.0 to 5.5V
  - ✓ Built-in LDO
- ✓ **Operating temperature**
  - ✓ -40°C~85°C
- ✓ **Flash memory**
  - ✓ Up to 64Kbytes of Flash memory to be used to store user code
  - ✓ Configurable EEPROM size, 512bytes single page erased, can be repeatedly erased more than 100 thousand times.
  - ✓ In-System-Programming, ISP in short, can be used to update the application code, no need for programmer.
  - ✓ Online debugging with single chip is supported, and no emulator is needed. The number of breakpoints is unlimited theoretically.

- **SRAM**
  - 128 bytes internal direct access RAM
  - 128 bytes internal indirect access RAM
  - 2048 bytes internal extended RAM
  - RAM expandable externally up to 64 Kbytes
- **Clock**
  - Internal 24MHz high precise R/C clock IRC
    - Error: ±0.3%
    - Temperature drift: ±1.0% at the temperature range of -40°C to 85°C and ±0.6% at the temperature range of -20°C to 65°C
  - Internal 32KHz low speed IRC with large error
  - External 4MHz~33MHz oscillator or external clock

    The three clock source above can be selected freely by used code.
- **Reset**
  - Hardware reset
    - Power-on reset
    - Reset by reset pin with high reset pulse
    - Watch dog timer reset
    - Low voltage detection reset. 4 low voltage detection levels are provided, 2.2V, 2.4V, V2.7, V3.0
  - Software reset
    - Writing the reset trigger register using software
- **Interrupts**
  - 19 interrupt sources: INT0, INT1, INT2, INT3, INT4, timer0, timer1, timer2, timer3, timer4, uart1, uart2, uart3, uart4, LVD, PCA/CCP, SPI, I^2C, comparator
  - 4 interrupt priority levels
- **Digital peripherals**
  - 5 16-bit timers: timer0, timer1, timer2, timer3, timer4. Where the mode 3 of timer0 has the Non Maskable Interrupt (NMI in short) function. Mode 0 of timer0 and timer1 is 16-bit Auto-reload mode.
  - 4 high speed UARTs: uart1, uart2,uart3, uart4, whose baud rate clock source may be fast as FOSC/4
  - 4 groups of PCA: CCP0, CCP1, CCP2, CCP3, which can be used as capture, high speed output and 6-bits, 7-bits, 8-bits or 10-bits PWM
  - SPI: Master mode, slave mode or master/slave automatic switch mode are supported.
  - I^2C: Master mode or slave mode are supported.
- **Analog peripherals**
  - Comparator
- **GPIO**
  - Up to 42 GPIOs: P0.0~P0.7, P1.0~P1.7, P2.0~P2.7, P3.0~P3.7, P4.0~P4.7, P5.4~P5.5
  - 4 modes for all GPIOs: quasi-bidirectional mode, push-pull output mode, open drain mode, high-impedance input mode
- **Package**
  - LQFP44, PDIP40

STCMCU

2.5 Features and Prices of STC8F1K08S2 family

- ✓ **Prices of different selections**

Microcontroller Model	Operating Voltage(V)	Flash Program Memory 100K times bytes	Large Capacity Expansion SRAM bytes	Powerful dual DPTR Increase or Decrease	EEPROM 100K times bytes	I/O maximum number	Serial ports Power-down wake-up	SPI	I²C	Timer/Counter(External Pow-down Wake-up)	16 bits advanced PWM Timers	15 bits Enhanced PWM(Dead Zone Control)	PCA/CCP/PWM(can be external interrupt)	Power-down wake-up timer	15 High speed ADC(8 PWM as 8D/A use)	Comparators(1 A/D、ext brownout detection)	Internal Low-vol Detection interrupt Pow-wk	Watchdog Reset timer	Internal Reset(optional reset threshold vol)	Internal Clock(24MHz Adjustable)	External clock output and reset	Program encrypted transmission	Set password for next update procedure	Support RS485 download	Support USB download	Online simulation	Footprint			2018 new product inf
																											TSSOP20	SOP16	SOP8	
STC8F1K08S2	2.0-5.5	8K	1.2K	2	3K	18	2	Yes	Yes	3	-	-	-	Yes		Yes	Yes	Yes	4lev	Yes	Yes	Yes	Yes	Yes	Yes	Yes	¥1.15	¥1.1	-	May Sample delivery
STC8F1K08S	2.0-5.5	8K	1.2K	2	3K	18	1	Yes	Yes	3	-	-	-	Yes		Yes	Yes	Yes	4lev	Yes	Yes	Yes	Yes	Yes	Yes	Yes	-	-	?	

- ✓ **Core**
  - ✓ Enhanced 8051 Core with single clock per machine cycle (1T)
  - ✓ Fully compatible instruction set with traditional 8051
  - ✓ 19 interrupt sources and 4 interrupt priority levels
  - ✓ Online debugging is supported
- ✓ **Operating voltage**
  - ✓ 2.0 to 5.5V
  - ✓ Built-in LDO
- ✓ **Operating temperature**
  - ✓ -40°C~85°C
- ✓ **Flash memory**
  - ✓ Up to 64Kbytes of Flash memory to be used to store user code
  - ✓ Configurable EEPROM size, 512bytes single page erased, can be repeatedly erased more than 100 thousand times.
  - ✓ In-System-Programming, ISP in short, can be used to update the application code, no need for programmer.
  - ✓ Online debugging with single chip is supported, and no emulator is needed. The number of breakpoints is unlimited theoretically.
- ✓ **SRAM**
  - ✓ 128 bytes internal direct access RAM
  - ✓ 128 bytes internal indirect access RAM
  - ✓ 2048 bytes internal extended RAM
  - ✓ RAM expandable externally up to 64 Kbytes
- ✓ **Clock**
  - ✓ Internal 24MHz high precise R/C clock IRC
    - ⌖ Error: ±0.3%

- Temperature drift: ±1.0% at the temperature range of -40°C to 85°C and ±0.6% at the temperature range of -20°C to 65°C
- ✓ Internal 32KHz low speed IRC with large error
- ✓ External 4MHz~33MHz oscillator or external clock

  The three clock source above can be selected freely by used code.

✓ **Reset**

- ✓ Hardware reset
  - Power-on reset
  - Reset by reset pin with high reset pulse
  - Watch dog timer reset
  - Low voltage detection reset. 4 low voltage detection levels are provided, 2.2V, 2.4V, V2.7, V3.0
- ✓ Software reset
  - Writing the reset trigger register using software

✓ **Interrupts**

- ✓ 19 interrupt sources: INT0, INT1, INT2, INT3, INT4, timer0, timer1, timer2, timer3, timer4, uart1, uart2, uart3, uart4, LVD, PCA/CCP, SPI, I^2C, comparator
- ✓ 4 interrupt priority levels

✓ **Digital peripherals**

- ✓ 5 16-bit timers: timer0, timer1, timer2, timer3, timer4. Where the mode 3 of timer0 has the Non Maskable Interrupt (NMI in short) function. Mode 0 of timer0 and timer1 is 16-bit Auto-reload mode.
- ✓ 4 high speed UARTs: uart1, uart2,uart3, uart4, whose baud rate clock source may be fast as FOSC/4
- ✓ 4 groups of PCA: CCP0, CCP1, CCP2, CCP3, which can be used as capture, high speed output and 6-bits, 7-bits, 8-bits or 10-bits PWM
- ✓ SPI: Master mode, slave mode or master/slave automatic switch mode are supported.
- ✓ I^2C: Master mode or slave mode are supported.

✓ **Analog peripherals**

- ✓ Comparator

✓ **GPIO**

- ✓ Up to 42 GPIOs: P0.0~P0.7, P1.0~P1.7, P2.0~P2.7, P3.0~P3.7, P4.0~P4.7, P5.4~P5.5
- ✓ 4 modes for all GPIOs: quasi-bidirectional mode, push-pull output mode, open drain mode, high-impedance input mode

✓ **Package**

- ✓ LQFP44, PDIP40

2.6 Features and Prices of STC8H1K08S2A10 family

✓ **Prices of different selections**

Microcontroller Model	Operating Voltage(V)	Flash Program Memory 100K times bytes	Large Capacity Expansion SRAM bytes	Powerful dual DPTR Increase or Decrease	EEPROM 100K times bytes	I/O maximum number	Serial ports Power-down wake-up	SPI	I²C	Timer/Counter(External Pow-down Wake-up)	16 bits advanced PWM Timers	15 bits Enhanced PWM(Dead Zone Control)	PCA/CCP/PWM(can be external interrupt)	Power-down wake-up timer	15 High speed ADC(8 PWM as 8D/A use)	Comparators(1 A/D ext brownout detection)	Internal Low-vol Detection interrupt Pow-wk	Watchdog Reset timer	Internal Reset(optional reset threshold vol)	Internal Clock(24MHz Adjustable)	External clock output and reset	Program encrypted transmission	Set password for next update procedure	Support RS485 download	Support USB download	Online simulation	Footprint		2018 new product inf
																											TSSOP20	SOP16	
STC8H1K08S2A10	1.7-5.5	8K	1.2K	2	3K	18	2	Yes	Yes	3	-	-	3	Yes	10b	Yes	Yes	Yes	4lev	Yes	Yes	Yes	Yes	Yes	Yes	Yes			June Sample delivery

- ✓ **Core**
  - ✓ Enhanced 8051 Core with single clock per machine cycle (1T)
  - ✓ Fully compatible instruction set with traditional 8051
  - ✓ 19 interrupt sources and 4 interrupt priority levels
  - ✓ Online debugging is supported
- ✓ **Operating voltage**
  - ✓ 2.0 to 5.5V
  - ✓ Built-in LDO
- ✓ **Operating temperature**
  - ✓ -40℃~85℃
- ✓ **Flash memory**
  - ✓ Up to 64Kbytes of Flash memory to be used to store user code
  - ✓ Configurable EEPROM size, 512bytes single page erased, can be repeatedly erased more than 100 thousand times.
  - ✓ In-System-Programming, ISP in short, can be used to update the application code, no need for programmer.
  - ✓ Online debugging with single chip is supported, and no emulator is needed. The number of breakpoints is unlimited theoretically.
- ✓ **SRAM**
  - ✓ 128 bytes internal direct access RAM
  - ✓ 128 bytes internal indirect access RAM
  - ✓ 2048 bytes internal extended RAM
  - ✓ RAM expandable externally up to 64 Kbytes
- ✓ **Clock**
  - ✓ Internal 24MHz high precise R/C clock IRC
    - ⌖ Error: ±0.3%
    - ⌖ Temperature drift: ±1.0% at the temperature range of -40℃ to 85℃ and ±0.6% at the temperature range of -20℃ to 65℃
  - ✓ Internal 32KHz low speed IRC with large error
  - ✓ External 4MHz~33MHz oscillator or external clock

    The three clock source above can be selected freely by used code.
- ✓ **Reset**

- ✓ Hardware reset
  - Power-on reset
  - Reset by reset pin with high reset pulse
  - Watch dog timer reset
  - Low voltage detection reset. 4 low voltage detection levels are provided, 2.2V, 2.4V, V2.7, V3.0
- ✓ Software reset
  - Writing the reset trigger register using software

✓ **Interrupts**

- ✓ 19 interrupt sources: INT0, INT1, INT2, INT3, INT4, timer0, timer1, timer2, timer3, timer4, uart1, uart2, uart3, uart4, LVD, PCA/CCP, SPI, I^2C, comparator
- ✓ 4 interrupt priority levels

✓ **Digital peripherals**

- ✓ 5 16-bit timers: timer0, timer1, timer2, timer3, timer4. Where the mode 3 of timer0 has the Non Maskable Interrupt (NMI in short) function. Mode 0 of timer0 and timer1 is 16-bit Auto-reload mode.
- ✓ 4 high speed UARTs: uart1, uart2,uart3, uart4, whose baud rate clock source may be fast as FOSC/4
- ✓ 4 groups of PCA: CCP0, CCP1, CCP2, CCP3, which can be used as capture, high speed output and 6-bits, 7-bits, 8-bits or 10-bits PWM
- ✓ SPI: Master mode, slave mode or master/slave automatic switch mode are supported.
- ✓ I^2C: Master mode or slave mode are supported.

✓ **Analog peripherals**

- ✓ Comparator

✓ **GPIO**

- ✓ Up to 42 GPIOs: P0.0~P0.7, P1.0~P1.7, P2.0~P2.7, P3.0~P3.7, P4.0~P4.7, P5.4~P5.5
- ✓ 4 modes for all GPIOs: quasi-bidirectional mode, push-pull output mode, open drain mode, high-impedance input mode

✓ **Package**

- ✓ LQFP44, PDIP40

STC MCU

2.7 Advance notice of STC8H1K64S2A10 family

✓ **Prices of different selections**

Microcontroller Model	Operating Voltage(V)	Flash Program Memory 100K times bytes	Large Capacity Expansion SRAM bytes	Powerful dual DPTR Increase or Decrease	EEPROM 100K times bytes	I/O maximum number	Serial ports Power-down wake-up	SPI	I^2C	Timer/Counter(External Pow-down Wake-up)	16 bits advanced PWM Timers	15 bits Enhanced PWM(Dead Zone Control)	PCA/CCP/PWM(can be external interrupt)	Power-down wake-up timer	15 High speed ADC(8 PWM as 8D/A use)	Comparators(1 A/D、ext brownout detection)	Internal Low-vol Detection interrupt Pow-wk	Watchdog Reset timer	Internal Reset(optional reset threshold vol)	Internal Clock(24MHz Adjustable)	External clock output and reset	Program encrypted transmission	Set password for next update procedure	Support RS485 download	Support USB download	Online simulation	封装		2018 new product inf
																											LQFP32	LQFP48	
STC8H1K64S2A10	1.7-5.5	64K	1K	2	IAP	45	2	Yes	Yes	4	4	-	-	Yes	10bits	Yes	Yes	Yes	4lev	Yes	Yes	Yes	Yes	Yes	Yes	Yes	Yes	¥2.1	¥2.3	July Sample delivery
STC8H1K32S2A10	1.7-5.5	32K	1K	2	1K	45	2	Yes	Yes	4	4	-	-	Yes	10bits	Yes	Yes	Yes	4lev	Yes	Yes	Yes	Yes	Yes	Yes	Yes	Yes	¥1.6	¥1.9	
STC8H1K16S2A10	1.7-5.5	16K	1K	2	9K	45	2	Yes	Yes	4	4	-	-	Yes	10bits	Yes	Yes	Yes	4lev	Yes	Yes	Yes	Yes	Yes	Yes	Yes	Yes	¥1.4	¥1.7	

2.8 Advance notice of STC8H1K08S2 family

✓ **Prices of different selections**

Microcontroller Model	Operating Voltage(V)	Flash Program Memory 100K times bytes	Large Capacity Expansion SRAM bytes	Powerful dual DPTR Increase or Decrease	EEPROM 100K times bytes	I/O maximum number	Serial ports Power-down wake-up	SPI	I^2C	Timer/Counter(External Pow-down Wake-up)	16 bits advanced PWM Timers	15 bits Enhanced PWM(Dead Zone Control)	PCA/CCP/PWM(can be external interrupt)	Power-down wake-up timer	15 High speed ADC(8 PWM as 8D/A use)	Comparators(1 A/D、ext brownout detection)	Internal Low-vol Detection interrupt Pow-wk	Watchdog Reset timer	Internal Reset(optional reset threshold vol)	Internal Clock(24MHz Adjustable)	External clock output and reset	Program encrypted transmission	Set password for next update procedure	Support RS485 download	Support USB download	Online simulation	Footprint		2018 new product inf
																											SOP16	TSSOP20	
STC8H1K08S2	1.7-5.5	8K	1K	2	3K	18	2	Yes	Yes	3	-	-	-	Yes		Yes	Yes	Yes	4lev	Yes	Yes	Yes	Yes	Yes	Yes	Yes	0.90	0.95	July Sample Supply

2.9 Advance notice of STC8H04A10 family

✓ **Prices of different selections**

Microcontroller Model	Operating Voltage(V)	Flash Program Memory 100K times bytes	Large Capacity Expansion SRAM bytes	Powerful dual DPTR Increase or Decrease	EEPROM 100K times bytes	I/O maximum number	Serial ports Power-down wake-up	SPI	I²C	Timer/Counter(External Pow-down Wake-up)	16 bits advanced PWM Timers	15 bits Enhanced PWM(Dead Zone Control)	PCA/CCP/PWM(can be external interrupt)	Power-down wake-up timer	15 High speed ADC(8 PWM as 8D/A use)	Comparators(1 A/D、ext brownout detection)	Internal Low-vol Detection interrupt Pow-wk	Watchdog Reset timer	Internal Reset(optional reset threshold vol)	Internal Clock(24MHz Adjustable)	External clock output and reset	Program encrypted transmission	Set password for next update procedure	Support RS485 download	Support USB download	Online simulation	Footprint	2018 new product inf
																											SOP8	
STC8H04A10	1.7-5.5	4K	256	1	3K	6	1	Yes	Yes	3	-	-	-	Yes	10bits	Yes	Yes	Yes	4lev	Yes	Yes	Yes	Yes	Yes	Yes	Yes	¥0.7	July Sample Delivery

2.10 Advance notice of STC8H04 family

✓ **Prices of different selections**

Microcontroller Model	Operating Voltage(V)	Flash Program Memory 100K times bytes	Large Capacity Expansion SRAM bytes	Powerful dual DPTR Increase or Decrease	EEPROM 100K times bytes	I/O maximum number	Serial ports Power-down wake-up	SPI	I²C	Timer/Counter(External Pow-down Wake-up)	16 bits advanced PWM Timers	15 bits Enhanced PWM(Dead Zone Control)	PCA/CCP/PWM(can be external interrupt)	Power-down wake-up timer	15 High speed ADC(8 PWM as 8D/A use)	Comparators(1 A/D、ext brownout detection)	Internal Low-vol Detection interrupt Pow-wk	Watchdog Reset timer	Internal Reset(optional reset threshold vol)	Internal Clock(24MHz Adjustable)	External clock output and reset	Program encrypted transmission	Set password for next update procedure	Support RS485 download	Support USB download	Online simulation	Footprint	2018 new product
																											SOP8	
STC8H04	1.7-5.5	4K	256	1	3K	6	1	Yes	Yes	3	-	-	-	Yes	-	Yes	Yes	Yes	4lev	Yes	Yes	Yes	Yes	Yes	Yes	Yes	¥0.6	January Sample Delivery

3 Pinouts and pin descriptions

3.1 Pinouts

3.1.1 STC8A8K64S4A12 family pinouts

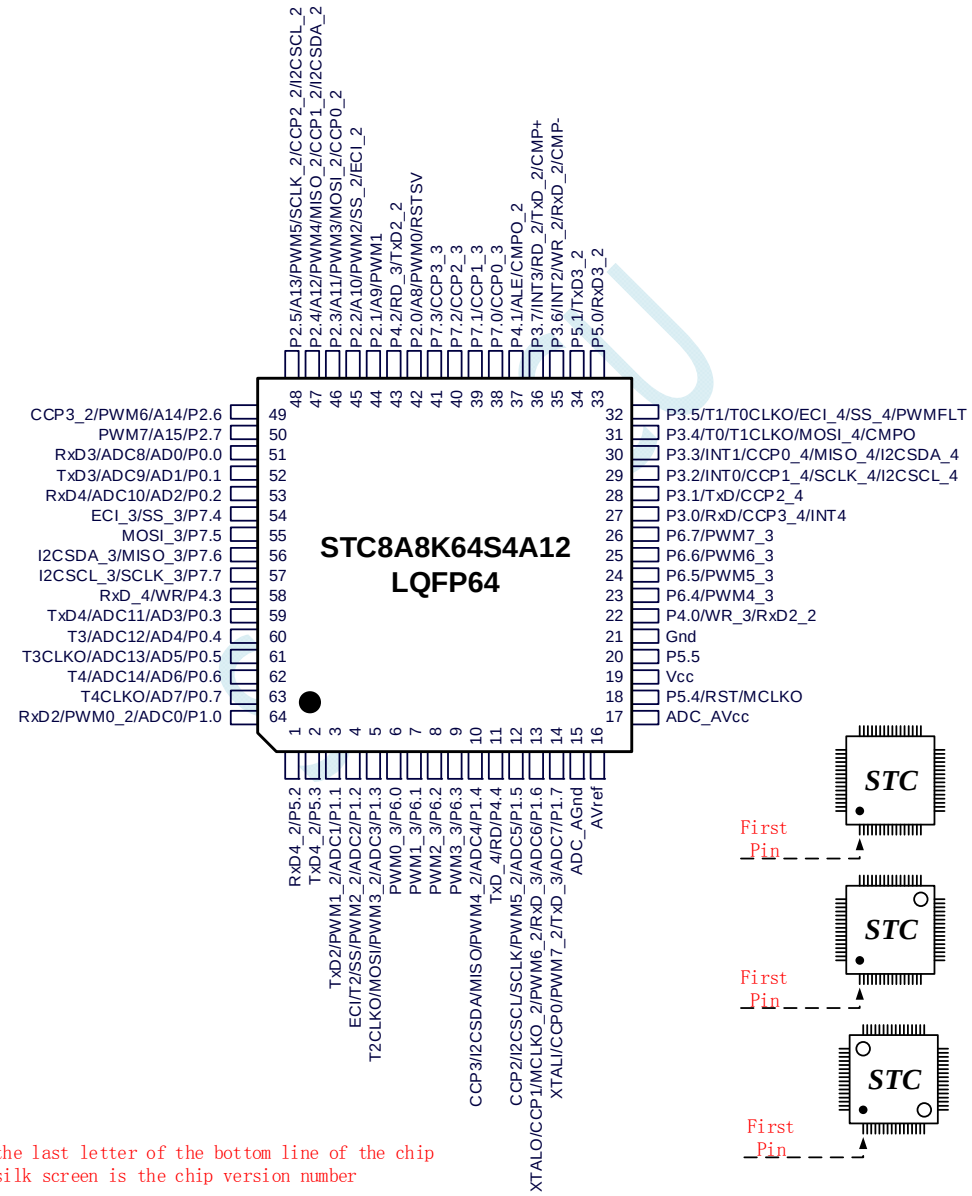

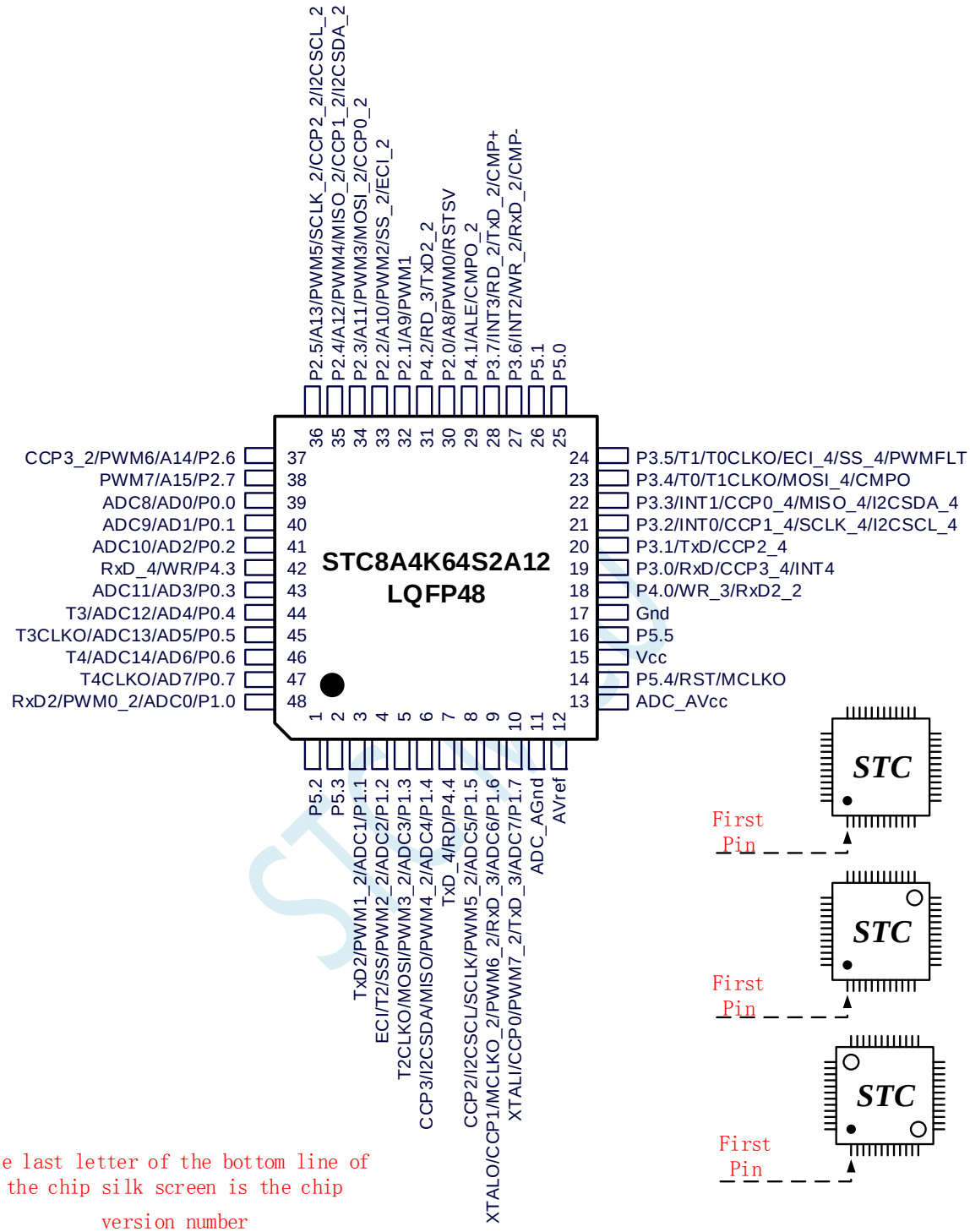

the last letter of the bottom line of the chip silk screen is the chip version number

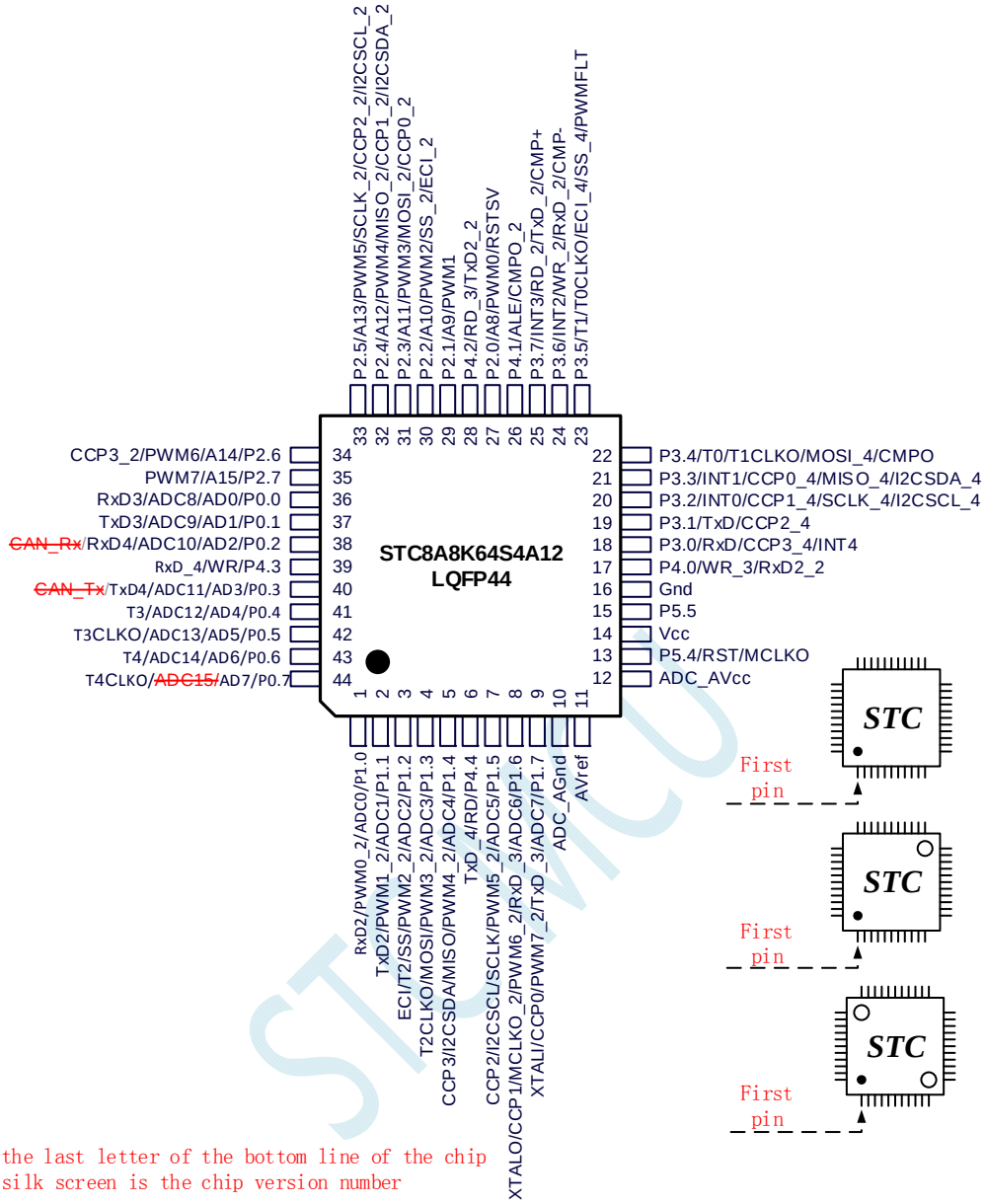

the last letter of the bottom line of the chip silk screen is the chip version number

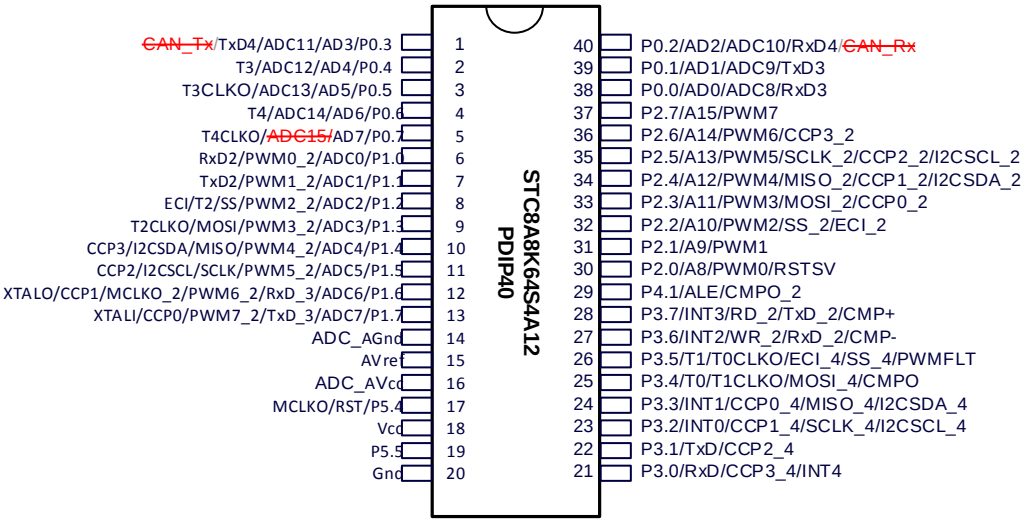

3.1.2 STC8A4K64S2A12 family pinouts

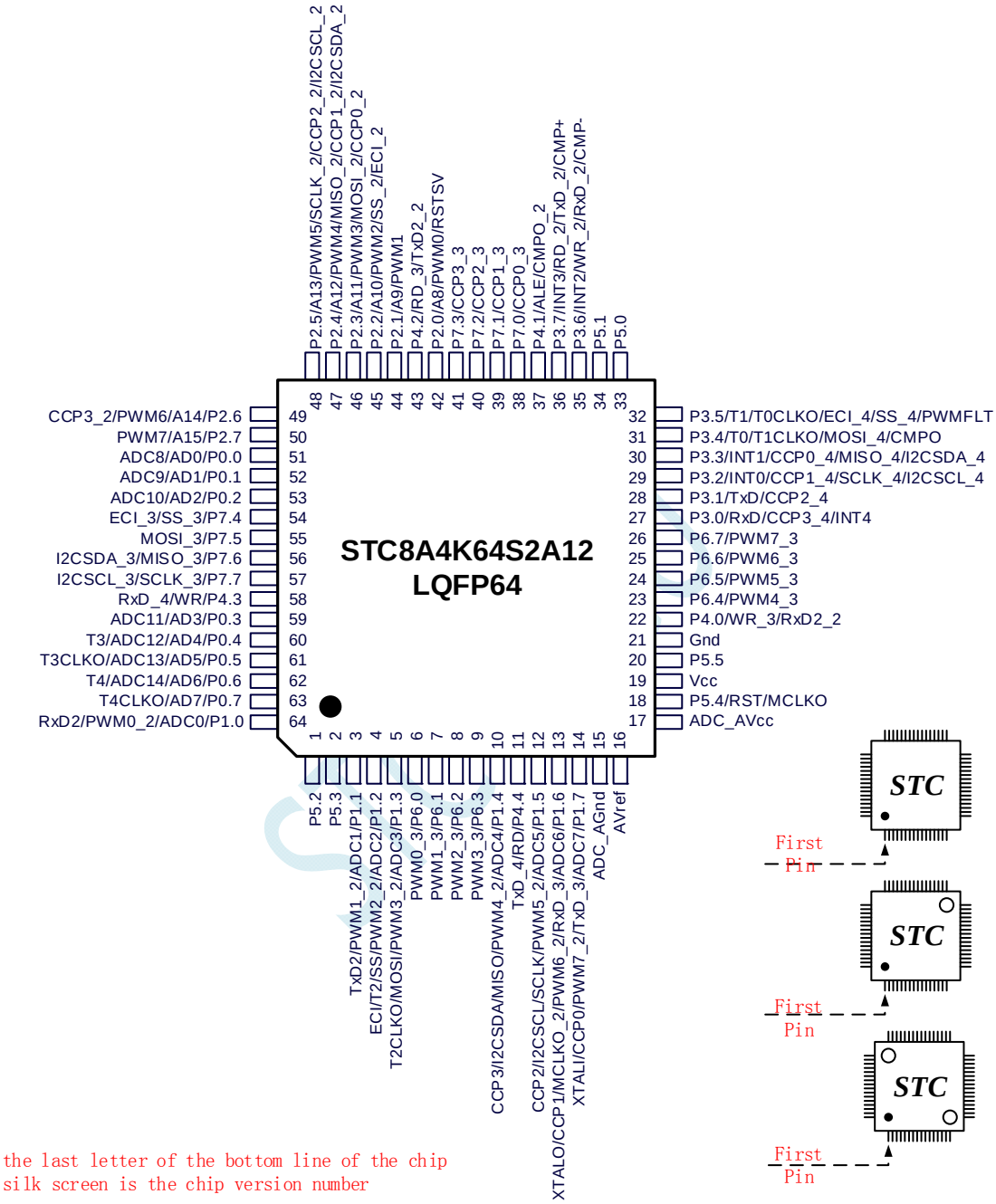

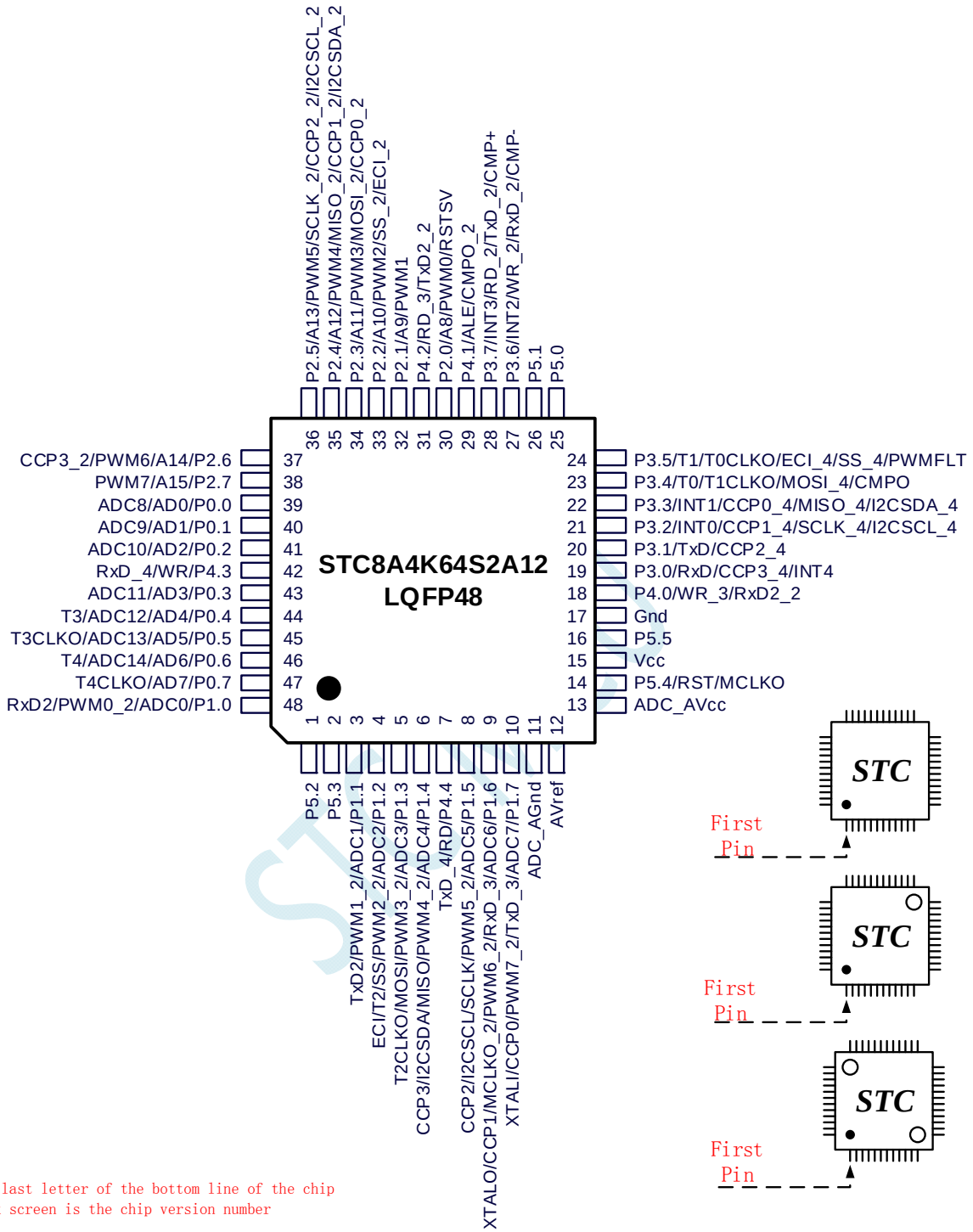
STC8A4K64S2A12
LQFP48
P2.5/A13/PWM5/SCLK_2/CCP2_2/I2CSCL_2 36
P2.4/A12/PWM4/MISO_2/CCP1_2/I2CSDA_2 35
P2.3/A11/PWM3/MOSI_2/CCP0_2 34
P2.2/A10/PWM2/SS_2/ECI_2 33
P2.1/A9/PWM1 32
P4.2/RD_3/TxD2_2 31
P2.0/A8/PWM0/RSTSV 30
P4.1/ALE/CMPO_2 29
P3.7/INT3/RD_2/TxD_2/CMP+ 28
P3.6/INT2/WR_2/RxD_2/CMP- 27
P5.1 26
P5.0 25
CCP3_2/PWM6/A14/P2.6 37
PWM7/A15/P2.7 38
ADC8/AD0/P0.0 39
ADC9/AD1/P0.1 40
ADC10/AD2/P0.2 41
RxD_4/WR/P4.3 42
ADC11/AD3/P0.3 43
T3/ADC12/AD4/P0.4 44
T3CLKO/ADC13/AD5/P0.5 45
T4/ADC14/AD6/P0.6 46
T4CLKO/AD7/P0.7 47
RxD2/PWM0_2/ADC0/P1.0 48
24 P3.5/T1/T0CLKO/ECI_4/SS_4/PWMFLT
23 P3.4/T0/T1CLKO/MOSI_4/CMPO
22 P3.3/INT1/CCP0_4/MISO_4/I2CSDA_4
21 P3.2/INT0/CCP1_4/SCLK_4/I2CSCL_4
20 P3.1/TxD/CCP2_4
19 P3.0/RxD/CCP3_4/INT4
18 P4.0/WR_3/RxD2_2
17 Gnd
16 P5.5
15 Vcc
14 P5.4/RST/MCLKO
13 ADC_AVcc
1 P5.2
2 P5.3
3 TxD2/PWM1_2/ADC1/P1.1
4 ECI/T2/SS/PWM2_2/ADC2/P1.2
5 T2CLKO/MOSI/PWM3_2/ADC3/P1.3
6 CCP3/I2CSDA/MISO/PWM4_2/ADC4/P1.4
7 TxD_4/RD/P4.4
8 CCP2/I2CSCL/SCLK/PWM5_2/ADC5/P1.5
9 XTALO/CCP1/MCLKO_2/PWM6_2/RxD_3/ADC6/P1.6
10 XTALI/CCP0/PWM7_2/TxD_3/ADC7/P1.7
11 ADC_AGnd
12 AVref
STC
First Pin
STC
First Pin
STC
First Pin
the last letter of the bottom line of the chip
silk screen is the chip version number

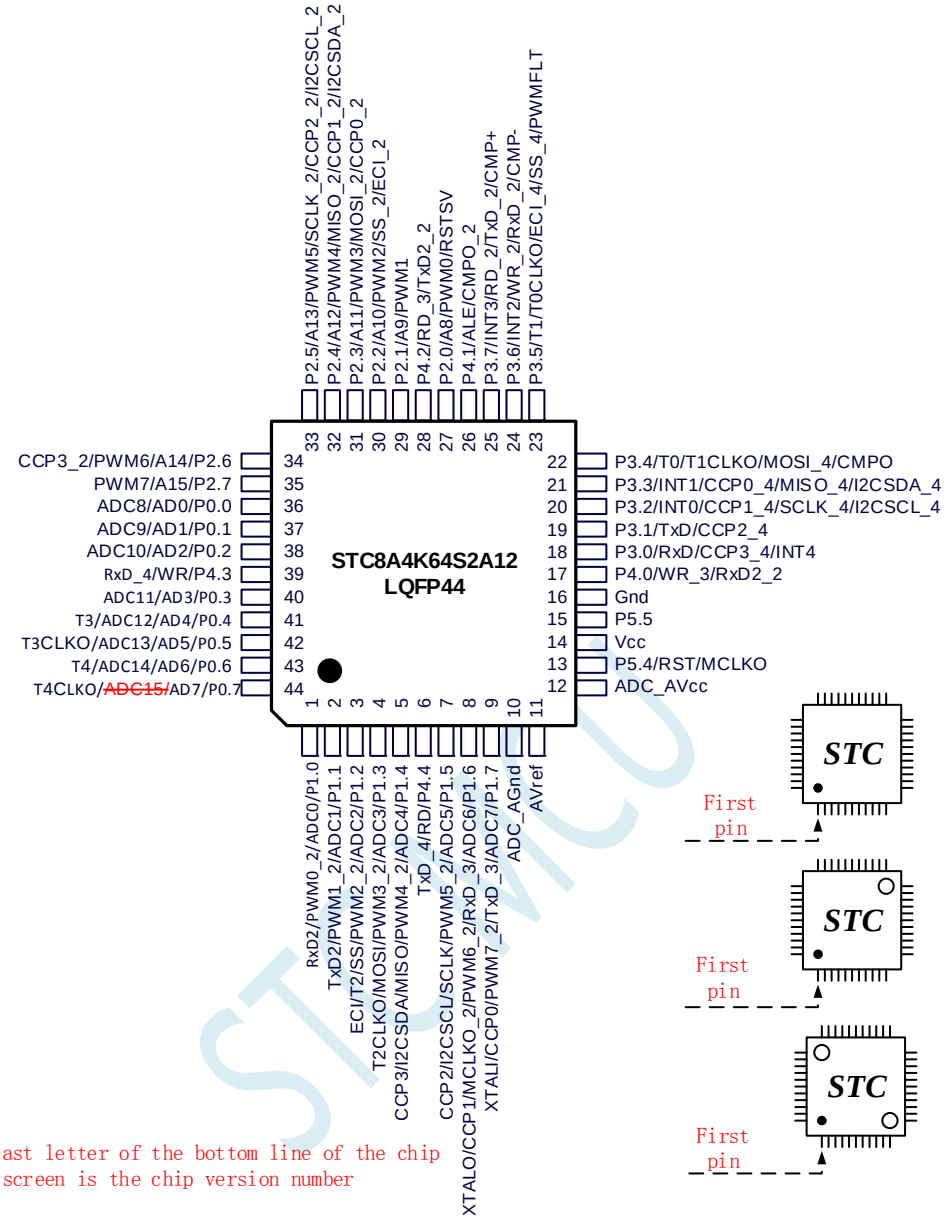

the last letter of the bottom line of the chip silk screen is the chip version number

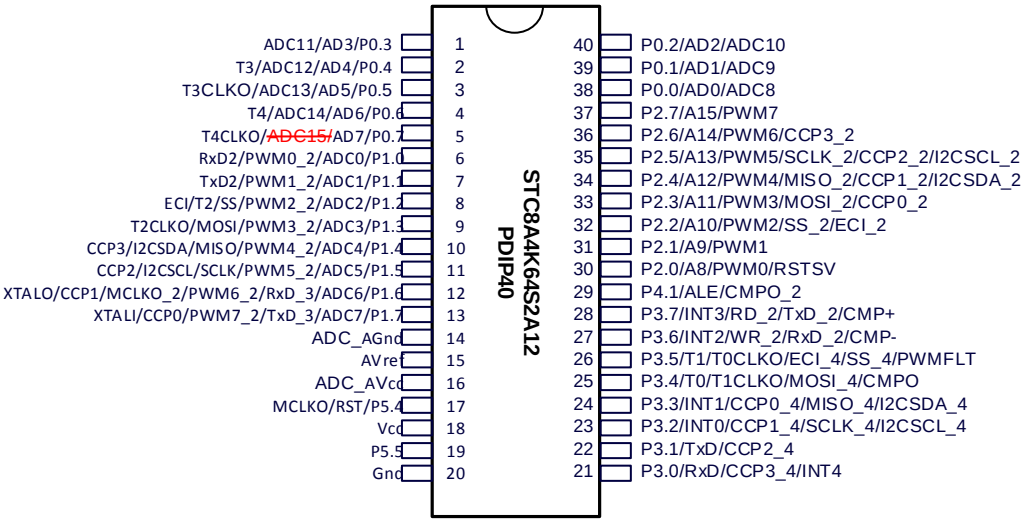

3.1.3 STC8F2K64S4 family pinouts

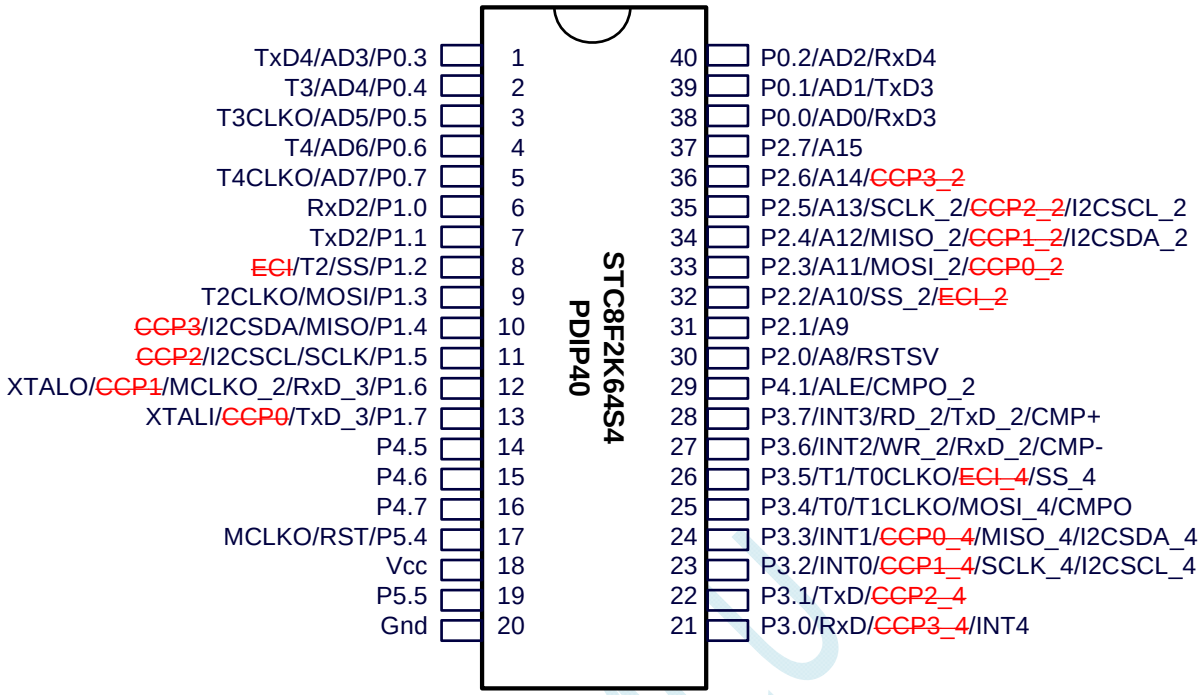

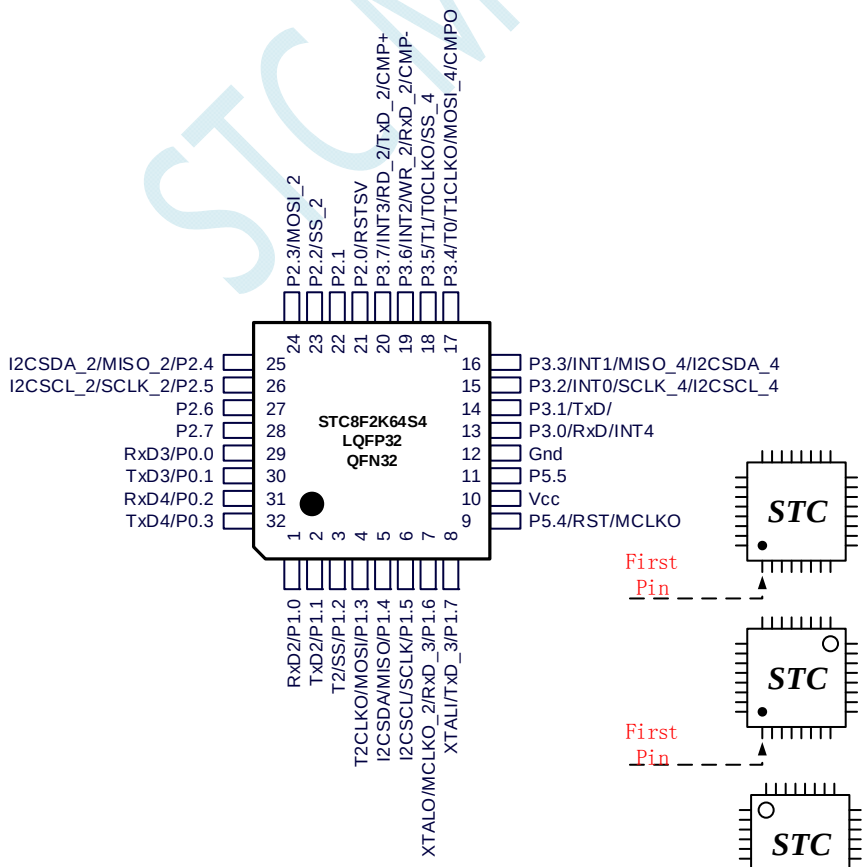

the last letter of the bottom line of the chip silk screen is the chip version number

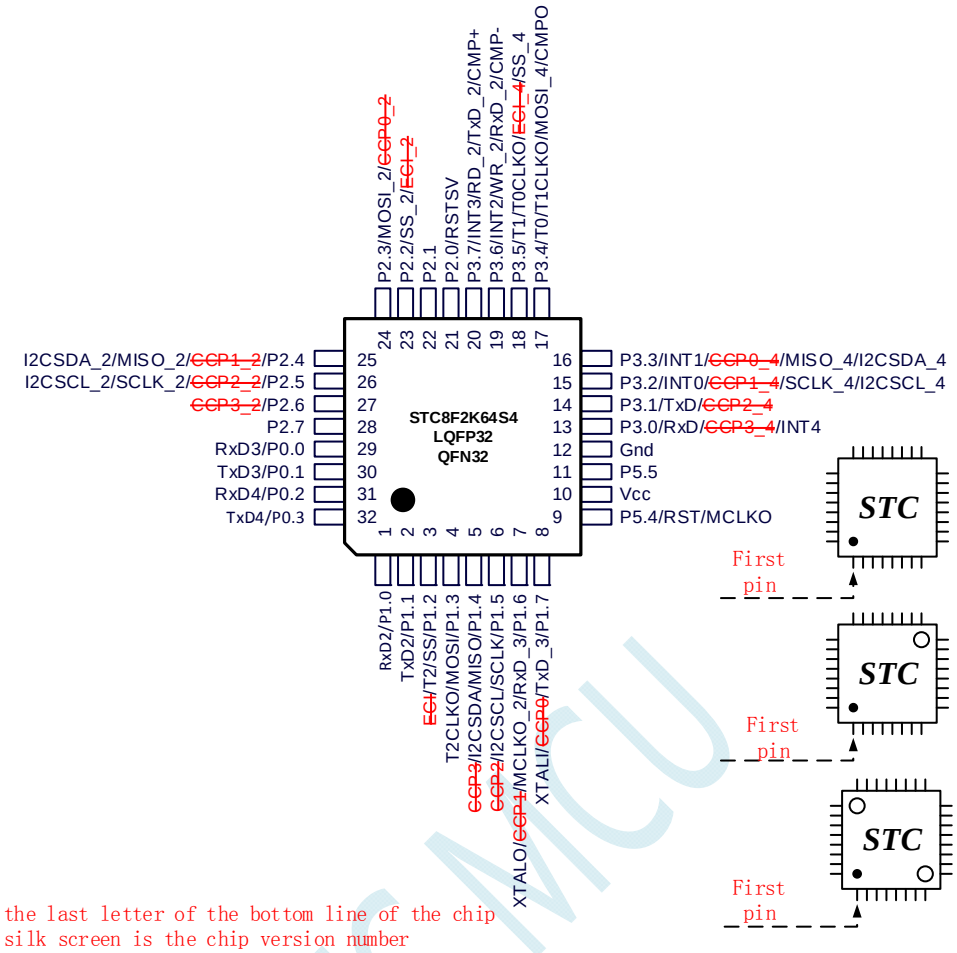

the last letter of the bottom line of the chip silk screen is the chip version number

STC MCU

3.1.4 STC8F2K64S2 family pinouts

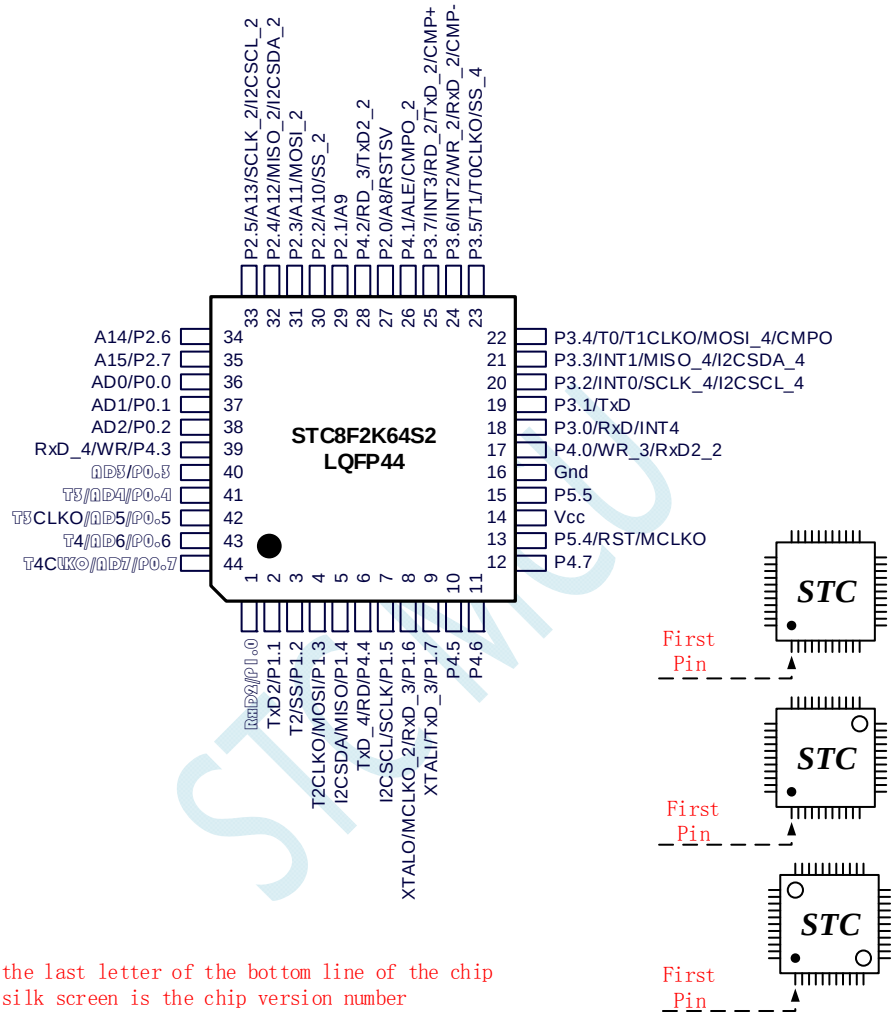

the last letter of the bottom line of the chip silk screen is the chip version number

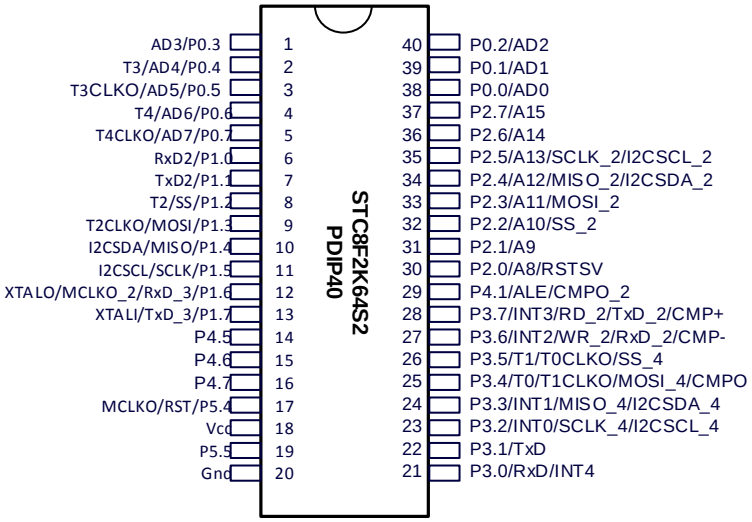

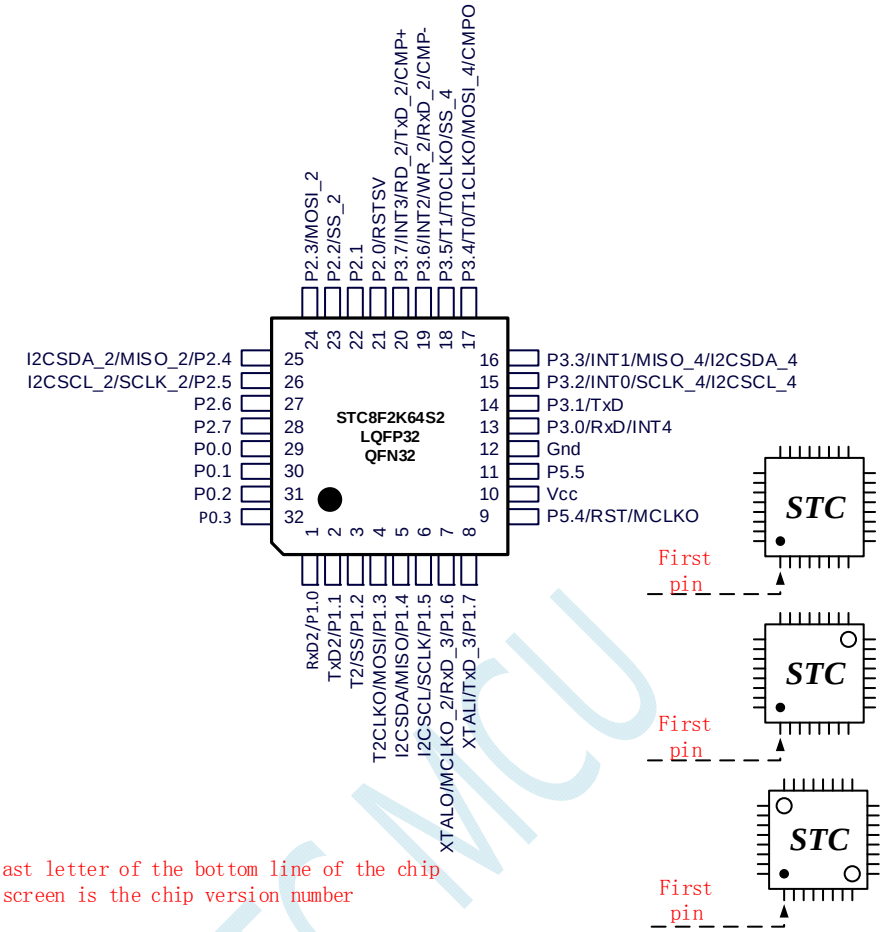

the last letter of the bottom line of the chip silk screen is the chip version number

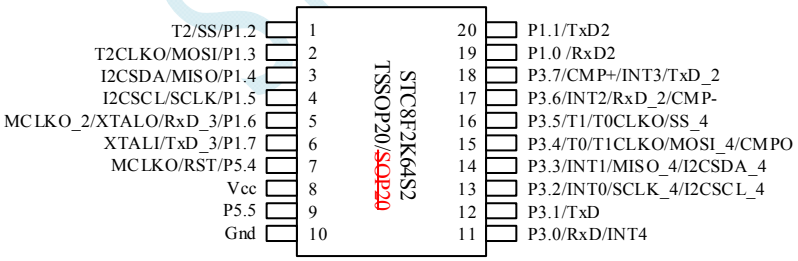

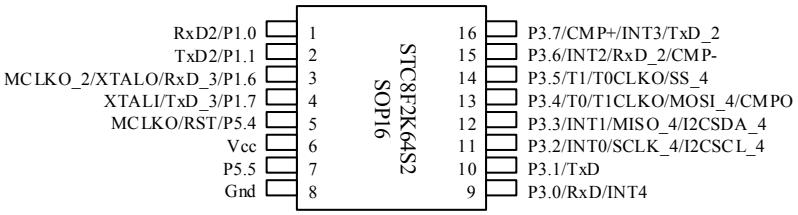

3.1.5 STC8F1K08S2 family pinouts

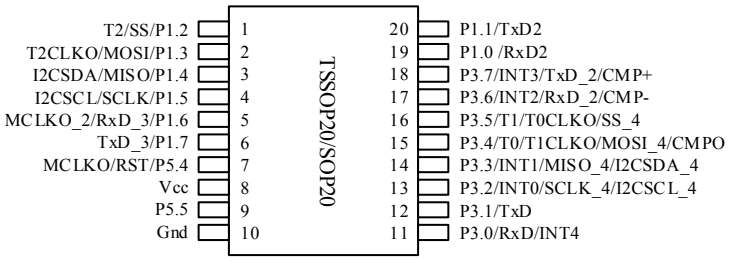

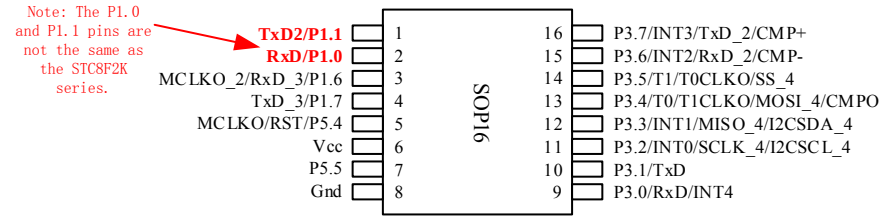

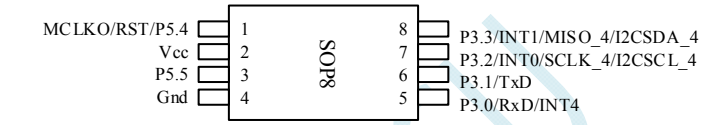

3.1.6 STC8H1K08S2A10 family pinouts

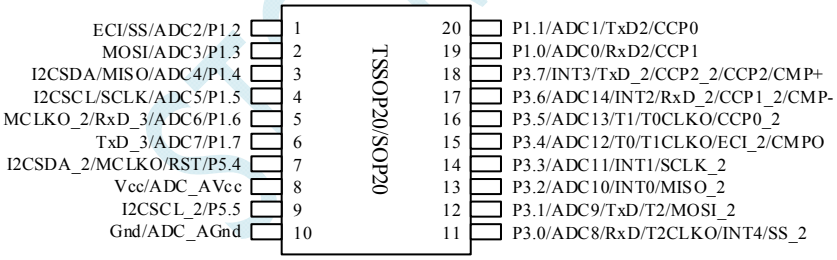

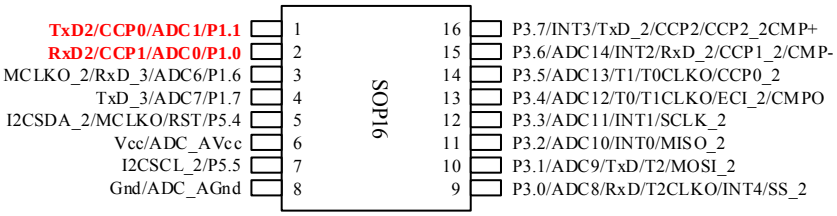

3.1.7 GX8S003 family pinouts

Special pin package for customer needs

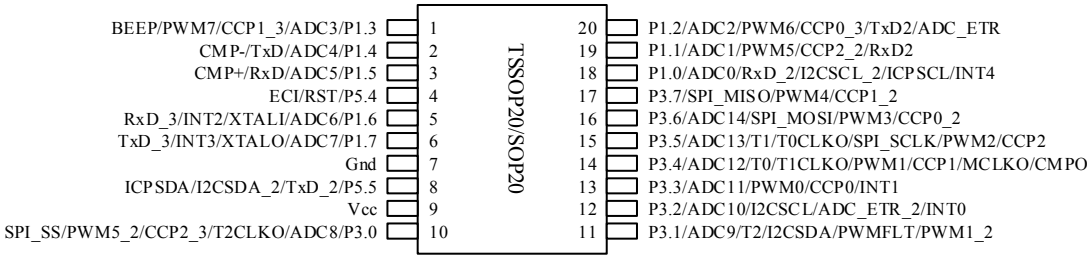

3.1.8 STC8H1K08S2 family pinouts

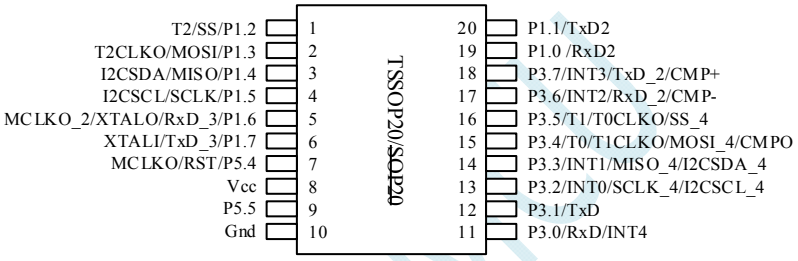

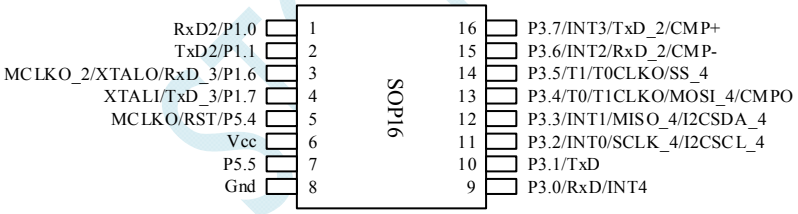

3.2 Pin descriptions

3.2.1 STC8A8K64S4A12 family pin descriptions

Number				Name	Class	Instructions
LQFP64S	LQFP48	LQFP44	PDIP40			
1	1			P5.2	I/O	Standard IO Pins
				RxD4_2	I	Serial Port 4 Receive Pin
2	2			P5.3	I/O	Standard IO Pins
				TxD4_2	O	Serial Port 4 Transport Pin
3	3	2	7	P1.1	I/O	Standard IO Pins
				ADC1	I	ADC analog input channel 1
				PWM1_2	O	Enhanced PWM channel 1 output pin
				TxD2	O	Serial Port 2 Transport Pin
4	4	3	8	P1.2	I/O	Standard IO Pins
				ADC2	I	ADC analog input channel 2
				PWM2_2	O	Enhanced PWM channel 2 output pin
				SS	I/O	SPI Slave selection
				T2	I	Timer 2 external clock input
				ECI	I	PCA external pulse input
5	5	4	9	P1.3	I/O	Standard IO Pins
				ADC3	I	ADC analog input channel 3
				PWM3_2	O	Enhanced PWM channel 3 output pin
				MOSI	I/O	SPI master output slave input
				T2CLKO	O	Timer 2 clock frequency output
6				P6.0	I/O	Standard IO Pins
				PWM0_3	O	Enhanced PWM channel 0 output pin
7				P6.1	I/O	Standard IO Pins
				PWM1_3	O	Enhanced PWM channel 1 output pin
8				P6.2	I/O	Standard IO Pins
				PWM2_3	O	Enhanced PWM channel 2 output pin
9				P6.3	I/O	Standard IO Pins
				PWM3_3	O	Enhanced PWM channel 3 output pin

Number				Name	Class	Instruction
LQFP64S	LQFP48	LQFP44	PDIP40			
10	6	5	10	P1.4	I/O	Standard IO Pins
				ADC4	I	ADC analog input channel 4
				PWM4_2	O	Enhanced PWM channel 4 output pin
				MISO	I/O	SPI master input slave output
				SDA	I/O	I2C nterface data line
				CCP3	I/O	PCA external pulse input
11	7	6		P4.4	I/O	Standard IO Pins
				RD	O	External bus read signal line
				TxD_4	O	Serial Port 1 Transport Pin
12	8	7	11	P1.5	I/O	Standard IO Pins
				ADC5	I	ADC analog input channel 5
				PWM5_2	O	Enhanced PWM channel 5 output pin
				SCLK	I/O	SPI Clock line
				SCL	I/O	I2C Clock line
				CCP2	I/O	PCA capture input and pulse output
13	9	8	12	P1.6	I/O	Standard IO Pins
				ADC6	I	ADC analog input channel 6
				RxD_3	I	Serial Port 1 Receive Pin
				PWM6_2	O	Enhanced PWM channel 6 output pin
				MCLKO_2	O	Main clock frequency output
				CCP1	I/O	PCA capture input and pulse output
				XTALO	O	Output pin of external crystal
14	10	9	13	P1.7	I/O	Standard IO Pins
				ADC7	I	ADC analog input channel 7
				TxD_3	O	Serial Port 1 Transport Pin
				PWM7_2	O	Enhanced PWM channel 7 output pin
				CCP0	I/O	PCA capture input and pulse output
				XTALI	I	External crystal/external clock input pin
15	11	10	14	ADC_AGnd	GND	ADC GND
16	12	11	15	AVref	I	ADC reference voltage pin
17	13	12	16	ADC_AVcc	VCC	ADC VCC
18	14	13	17	P5.4	I/O	Standard IO Pins
				RST	I	Reset Pin
				MCLKO	O	Main clock frequency output
19	15	14	18	Vcc	VCC	Source Pin
20	16	15	19	P5.5	I/O	Standard IO Pins
21	17	16	20	Gnd	GND	GND

Number				Name	Class	Instruction
LQFP64S	LQFP48	LQFP44	PDIP40			
22	18	17		P4.0	I/O	Standard IO port
				WR_3	O	External bus write signal line
				RxD2_2	I	Serial Port 2 Receive Pin
23				P6.4	I/O	Standard IO port
				PWM4_3	O	Enhanced PWM channel 4 output pin
24				P6.5	I/O	Standard IO port
				PWM5_3	O	Enhanced PWM channel 5 output pin
25				P6.6	I/O	Standard IO port
				PWM6_3	O	Enhanced PWM channel 6 output pin
26				P6.7	I/O	Standard IO port
				PWM7_3	O	Enhanced PWM channel 7 output pin
27	19	18	21	P3.0	I/O	Standard IO port
				RxD	I	Serial Port 1 Receive Pin
				CCP3_4	I/O	PCA CAPTURE INPUT AND PULSE OUTPUT
				INT4	I	External interrupt 4
28	20	19	22	P3.1	I/O	Standard IO port
				TxD	O	Serial Port 1 Transport Pin
				CCP2_4	I/O	PCA capture input and pulse output
29	21	20	23	P3.2	I/O	Standard IO port
				INT0	I	External interrupt 0
				CCP1_4	I/O	PCA capture input and pulse output
				SCLK_4	I/O	SPI CLOCK LINE
				SCL_4	I/O	I2C CLOCK LINE
30	22	21	24	P3.3	I/O	Standard IO port
				INT1	I	External interrupt 1
				CCP0_4	I/O	PCA capture input and pulse output
				MISO_4	I/O	SPI master input slave output
				SDA_4	I/O	I2C INTERFACE DATA LINE
31	23	22	25	P3.4	I/O	Standard IO port
				T0	I	Timer 0 external clock input
				T1CLKO	O	Timer 1 clock frequency output
				MOSI_4	I/O	SPI master output slave input
				CMPO	O	Comparator output

Number				Name	Class	Instrcuction
LQFP64S	LQFP48	LQFP44	PDIP40			
32	24	23	26	P3.5	I/O	Standard IO port
				T1	I	Timer 1 external clock input
				T0CLKO	O	Timer 0 clock divider output
				ECI_4	I	PCA external pulse input
				SS_4	I	SPI slave select pin (host output)
				PWMFLT	I	Enhanced PWM external anomaly detection pin
33	25			P5.0	I/O	Standard IO port
				RxD3_2	I	Serial Port 3 Receive Pin
34	26			P5.1	I/O	Standard IO port
				TxD3_2	O	Serial Port 3 Transport Pin
35	27	24	27	P3.6	I/O	Standard IO port
				INT2	I	External interrupt 2
				WR_2	O	External bus write signal line
				RxD_2	I	Serial Port 1 Receive Pin
				CMP-	I	Comparator negative input
36	28	25	28	P3.7	I/O	Standard IO port
				INT3	I	External interrupt3
				RD_2	O	External bus read signal line
				TxD_2	O	Serial Port 1 Transport Pin
				CMP+	I	Comparator positive input
37	29	26	29	P4.1	I/O	Standard IO port
				ALE	O	Address latch signal
				CMPO_2	O	Comparator output
38				P7.0	I/O	Standard IO port
				CCP0_3	I/O	PCA capture input and pulse output
39				P7.1	I/O	Standard IO port
				CCP1_3	I/O	PCA capture input and pulse output
40				P7.2	I/O	Standard IO port
				CCP2_3	I/O	PCA capture input and pulse output
41				P7.3	I/O	Standard IO port
				CCP3_3	I/O	PCA capture input and pulse output
42	30	27	30	P2.0	I/O	Standard IO port
				A8	I	Address bus
				PWM0	O	Enhanced PWM channel 0 output pin
				RSTSV	-	the port can be configured during ISP download
43	31	28		P4.2	I/O	Standard IO port
				RD_3	O	External bus read signal line
				TxD2_2	O	Serial Port 2 Transport Pin

Number				Name	Class	Instruction
LQFP64S	LQFP48	LQFP44	PDIP40			
44	32	29	31	P2.1	I/O	Standard IO port
				A9	I	Address bus
				PWM1	O	Enhanced PWM channel 1 output pin
45	33	30	32	P2.2	I/O	Standard IO port
				A10	I	Address bus
				PWM2	O	Enhanced PWM channel 2 output pin
				SS_2	I	SPI slave select pin (host output)
				ECI_2	I	PCA external pulse input
46	34	31	33	P2.3	I/O	Standard IO port
				A11	I	Address bus
				PWM3	O	Enhanced PWM channel 3 output pin
				MOSI_2	I/O	SPI master output slave input
				CCP0_2	I/O	PCA capture input and pulse output
47	35	32	34	P2.4	I/O	Standard IO port
				A12	I	Address bus
				PWM4	O	Enhanced PWM channel 4 output pin
				MISO_2	I/O	SPI master input slave output
				SDA_2	I/O	I2C INTERFACE DATA LINE
				CCP1_2	I/O	PCA capture input and pulse output
48	36	33	35	P2.5	I/O	Standard IO port
				A13	I	Address bus
				PWM5	O	Enhanced PWM channel 5 output pin
				SCLK_2	I/O	SPI CLOCK LINE
				SCL_2	I/O	I2C CLOCK LINE
				CCP2_2	I/O	PCA capture input and pulse output
49	37	34	36	P2.6	I/O	Standard IO port
				A14	I	Address bus
				PWM6	O	Enhanced PWM channel 6 output pin
				CCP3_2	I/O	PCA capture input and pulse output
50	38	35	37	P2.7	I/O	Standard IO port
				A15	I	Address bus
				PWM7	O	Enhanced PWM channel 7 output pin
51	39	36	38	P0.0	I/O	Standard IO port
				AD0	I	Address bus
				ADC8	I	ADC analog input channel 8
				RxD3	I	Serial Port 3 Receive Pin

Number				Name	Class	Instruction
LQFP64S	LQFP48	LQFP44	PDIP40			
52	40	37	39	P0.1	I/O	Standard IO port
				AD1	I	Address bus
				ADC9	I	ADC analog input channel 9
				TxD3	O	Serial Port 3 Transport Pin
53	41	38	40	P0.2	I/O	Standard IO port
				AD2	I	Address bus
				ADC10	I	ADC analog input channel 10
				RxD4	I	Serial Port 4 Receive Pin
54				P7.4	I/O	Standard IO port
				SS_3	I	SPI slave select pin (host output)
				ECI_3	I	PCA external pulse input
55				P7.5	I/O	Standard IO port
				MOSI_3	I/O	SPI master output slave input
56				P7.6	I/O	Standard IO port
				MISO_3	I/O	SPI master input slave output
				SDA_3	I/O	I2C INTERFACE DATA LINE
57				P7.7	I/O	Standard IO port
				SCLK_3	I/O	SPI CLOCK LINE
				SCL_3	I/O	I2C CLOCK LINE
58	42	39		P4.3	I/O	Standard IO port
				WR	O	External bus write signal line
				RxD_4	I	Serial Port 1 Receive Pin
59	43	40	1	P0.3	I/O	Standard IO port
				AD3	I	Address bus
				ADC11	I	ADC analog input channel 11
				TxD4	O	Serial Port 4 Transport Pin
60	44	41	2	P0.4	I/O	Standard IO port
				AD4	I	Address bus
				ADC12	I	ADC analog input channel 12
				T3	I	Timer 3 external clock input

Number				Name	Class	Instruction
LQFP64S	LQFP48	LQFP44	PDIP40			
61	45	42	3	P0.5	I/O	Standard IO port
				AD5	I	Address bus
				ADC13	I	ADC analog input channel 13
				T3CLKO	O	Timer 3 clock frequency output
62	46	43	4	P0.6	I/O	Standard IO port
				AD6	I	Address bus
				ADC14	I	ADC analog input channel 14

				T4	I	Timer 4 external clock input
63	47	44	5	P0.7	I/O	Standard IO port
				AD7	I	Address bus
				T4CLKO	O	Timer 4 clock frequency output
64	48	1	6	P1.0	I/O	Standard IO port
				ADC0	I	ADC analog input channel 0
				PWM0_2	O	Enhanced PWM channel 0 output pin
				RxD2	I	Serial Port 2 Receive Pin

3.2.2 STC8A4K64S2A12 family pin descriptions

Number				Name	Class	Instruction
LQFP64S	LQFP48	LQFP44	PDIP40			
1	1			P5.2	I/O	Standard IO Pins
2	2			P5.3	I/O	Standard IO Pins
3	3	2	7	P1.1	I/O	Standard IO Pins
				ADC1	I	ADC analog input channel 1
				PWM1_2	O	Enhanced PWM channel 1 output pin
				TxD2	O	Serial Port 2 Transport Pin
4	4	3	8	P1.2	I/O	Standard IO Pins
				ADC2	I	ADC analog input channel 2
				PWM2_2	O	Enhanced PWM channel 2 output pin
				SS	I/O	SPI Slave selection
				T2	I	Timer 2 external clock input
				ECI	I	PCA external pulse input
5	5	4	9	P1.3	I/O	Standard IO Pins
				ADC3	I	ADC analog input channel 3
				PWM3_2	O	Enhanced PWM channel 3 output pin
				MOSI	I/O	SPI master output slave input
				T2CLKO	O	Timer 2 clock frequency output
6				P6.0	I/O	Standard IO Pins
				PWM0_3	O	Enhanced PWM channel 0 output pin
7				P6.1	I/O	Standard IO Pins
				PWM1_3	O	Enhanced PWM channel 1 output pin
8				P6.2	I/O	Standard IO Pins
				PWM2_3	O	Enhanced PWM channel 2 output pin
9				P6.3	I/O	Standard IO Pins
				PWM3_3	O	Enhanced PWM channel 3 output pin

Number				Name	Class	Instruction
LQFP64S	LQFP48	LQFP44	PDIP40			
10	6	5	10	P1.4	I/O	Standard IO port
				ADC4	I	ADC analog input channel 4
				PWM4_2	O	Enhanced PWM channel 4 output pin
				MISO	I/O	SPI master input slave output
				SDA	I/O	I2C INTERFACE DATA LINE
				CCP3	I/O	PCA capture input and pulse output
11	7	6		P4.4	I/O	Standard IO port
				RD	O	External bus read signal line
				TxD_4	O	Serial Port 1 Transport Pin
12	8	7	11	P1.5	I/O	Standard IO port
				ADC5	I	ADC analog input channel 5
				PWM5_2	O	Enhanced PWM channel 5 output pin
				SCLK	I/O	SPI CLOCK LINE
				SCL	I/O	I2C CLOCK LINE
				CCP2	I/O	PCA capture input and pulse output
13	9	8	12	P1.6	I/O	Standard IO port
				ADC6	I	ADC analog input channel 6
				RxD_3	I	Serial Port 1 Receive Pin
				PWM6_2	O	Enhanced PWM channel 6 output pin
				MCLKO_2	O	Main clock frequency output
				CCP1	I/O	PCA capture input and pulse output
				XTALO	O	Output pin of external crystal
14	10	9	13	P1.7	I/O	Standard IO port
				ADC7	I	ADC analog input channel 7
				TxD_3	O	Serial Port 1 Transport Pin
				PWM7_2	O	Enhanced PWM channel 7 output pin
				CCP0	I/O	PCA capture input and pulse output
				XTALI	I	External crystal/external clock input pin
15	11	10	14	ADC_AGnd	GND	ADC GND
16	12	11	15	AVref	I	ADC reference voltage pin
17	13	12	16	ADC_AVcc	VCC	ADC SOURCE PIN
18	14	13	17	P5.4	I/O	Standard IO port
				RST	I	Reset pin
				MCLKO	O	Main clock frequency output
19	15	14	18	Vcc	VCC	VCC
20	16	15	19	P5.5	I/O	Standard IO port
21	17	16	20	Gnd	GND	GND

Number				Name	Class	Instruction
LQFP64S	LQFP48	LQFP44	PDIP40			
22	18	17		P4.0	I/O	Standard IO port
				WR_3	O	External bus write signal line
				RxD2_2	I	Serial Port 2 Receive Pin
23				P6.4	I/O	Standard IO port
				PWM4_3	O	Enhanced PWM channel 4 output pin
24				P6.5	I/O	Standard IO port
				PWM5_3	O	Enhanced PWM channel 5 output pin
25				P6.6	I/O	Standard IO port
				PWM6_3	O	Enhanced PWM channel 6 output pin
26				P6.7	I/O	Standard IO port
				PWM7_3	O	Enhanced PWM channel 7 output pin
27	19	18	21	P3.0	I/O	Standard IO port
				RxD	I	Serial Port 1 Receive Pin
				CCP3_4	I/O	PCA capture input and pulse output
				INT4	I	External interrupt 4
28	20	19	22	P3.1	I/O	Standard IO port
				TxD	O	Serial Port 1 Transport Pin
				CCP2_4	I/O	PCA capture input and pulse output
29	21	20	23	P3.2	I/O	Standard IO port
				INT0	I	External interrupt 0
				CCP1_4	I/O	PCA capture input and pulse output
				SCLK_4	I/O	SPI CLOCK LINE
				SCL_4	I/O	I2C CLOCK LINE
30	22	21	24	P3.3	I/O	Standard IO port
				INT1	I	External interrupt 1
				CCP0_4	I/O	PCA capture input and pulse output
				MISO_4	I/O	SPI master input slave output
				SDA_4	I/O	I2C INTERFACE DATA LINE
31	23	22	25	P3.4	I/O	Standard IO port
				T0	I	Timer 0 external clock input
				T1CLKO	O	Timer 1 clock frequency output
				MOSI_4	I/O	SPI master output slave input
				CMPO	O	Comparator output

Number				Name	Class	Instruction
LQFP64S	LQFP48	LQFP44	PDIP40			
32	24	23	26	P3.5	I/O	Standard IO port
				T1	I	Timer 1 external clock input
				T0CLKO	O	Timer 0 clock divider output
				ECI_4	I	PCA EXTERNAL PULSE INPUT
				SS_4	I	SPI slave select pin (host output)
				PWMFLT	I	Enhanced PWM external anomaly detection pin
33	25			P5.0	I/O	Standard IO port
34	26			P5.1	I/O	Standard IO port
35	27	24	27	P3.6	I/O	Standard IO port
				INT2	I	External interrupt 2
				WR_2	O	External bus write signal line
				RxD_2	I	Serial Port 1 Receive Pin
				CMP-	I	Comparator negative input
36	28	25	28	P3.7	I/O	Standard IO port
				INT3	I	External interrupt3
				RD_2	O	External bus read signal line
				TxD_2	O	Serial Port 1 Transport Pin
				CMP+	I	Comparator positive input
37	29	26	29	P4.1	I/O	Standard IO port
				ALE	O	Address latch signal
				CMPO_2	O	Comparator output
38				P7.0	I/O	Standard IO port
				CCP0_3	I/O	PCA capture input and pulse output
39				P7.1	I/O	Standard IO port
				CCP1_3	I/O	PCA capture input and pulse output
40				P7.2	I/O	Standard IO port
				CCP2_3	I/O	PCA capture input and pulse output
41				P7.3	I/O	Standard IO port
				CCP3_3	I/O	PCA capture input and pulse output
42	30	27	30	P2.0	I/O	Standard IO port
				A8	I	Address bus
				PWM0	O	Enhanced PWM channel 0 output pin
				RSTSV	-	the port can be configured during ISP download
43	31	28		P4.2	I/O	Standard IO port
				RD_3	O	External bus read signal line
				TxD2_2	O	Serial Port 2 Transport Pin

Number				Name	Class	Instruction
LQFP64S	LQFP48	LQFP44	PDIP40			
44	32	29	31	P2.1	I/O	Standard IO port
				A9	I	Address bus
				PWM1	O	Enhanced PWM channel 1 output pin
45	33	30	32	P2.2	I/O	Standard IO port
				A10	I	Address bus
				PWM2	O	Enhanced PWM channel 2 output pin
				SS_2	I	SPI slave select pin (host output)
				ECI_2	I	PCA EXTERNAL PULSE INPUT
46	34	31	33	P2.3	I/O	Standard IO port
				A11	I	Address bus
				PWM3	O	Enhanced PWM channel 3 output pin
				MOSI_2	I/O	SPI master output slave input
				CCP0_2	I/O	PCA capture input and pulse output
47	35	32	34	P2.4	I/O	Standard IO port
				A12	I	Address bus
				PWM4	O	Enhanced PWM channel 4 output pin
				MISO_2	I/O	SPI master input slave output
				SDA_2	I/O	I2C INTERFACE DATA LINE
				CCP1_2	I/O	PCA CAPTURE INPUT AND PULSE OUTPUT
48	36	33	35	P2.5	I/O	Standard IO port
				A13	I	Address bus
				PWM5	O	Enhanced PWM channel 5 output pin
				SCLK_2	I/O	SPI CLOCK LINE
				SCL_2	I/O	I2C CLOCK LINE
				CCP2_2	I/O	PCA capture input and pulse output
49	37	34	36	P2.6	I/O	Standard IO port
				A14	I	Address bus
				PWM6	O	Enhanced PWM channel 6 output pin
				CCP3_2	I/O	PCA capture input and pulse output
50	38	35	37	P2.7	I/O	Standard IO port
				A15	I	Address bus
				PWM7	O	Enhanced PWM channel 7 output pin
51	39	36	38	P0.0	I/O	Standard IO port
				AD0	I	Address bus
				ADC8	I	ADC analog input channel 8

Number				Name	Class	Instruction
LQFP64S	LQFP48	LQFP44	PDIP40			
52	40	37	39	P0.1	I/O	Standard IO port
				AD1	I	Address bus
				ADC9	I	ADC analog input channel 9
53	41	38	40	P0.2	I/O	Standard IO port
				AD2	I	Address bus
				ADC10	I	ADC analog input channel 10
54				P7.4	I/O	Standard IO port
				SS_3	I	SPI slave select pin (host output)
				ECI_3	I	PCA EXTERNAL PULSE INPUT
55				P7.5	I/O	Standard IO port
				MOSI_3	I/O	SPI master output slave input
56				P7.6	I/O	Standard IO port
				MISO_3	I/O	SPI master input slave output
				SDA_3	I/O	I2C INTERFACE DATA LINE
57				P7.7	I/O	Standard IO port
				SCLK_3	I/O	SPI CLOCK LINE
				SCL_3	I/O	I2C CLOCK LINE
58	42	39		P4.3	I/O	Standard IO port
				WR	O	External bus write signal line
				RxD_4	I	Serial Port 1 Receive Pin
59	43	40	1	P0.3	I/O	Standard IO port
				AD3	I	Address bus
				ADC11	I	ADC analog input channel 11
60	44	41	2	P0.4	I/O	Standard IO port
				AD4	I	Address bus
				ADC12	I	ADC analog input channel 12
				T3	I	Timer 3 external clock input

Number				Name	Class	Instruction
LQFP64S	LQFP48	LQFP44	PDIP40			
61	45	42	3	P0.5	I/O	Standard IO port
				AD5	I	Address bus
				ADC13	I	ADC analog input channel 13
				T3CLKO	O	Timer 3 clock frequency output
62	46	43	4	P0.6	I/O	Standard IO port
				AD6	I	Address bus
				ADC14	I	ADC analog input channel 14
				T4	I	Timer 4 external clock input
63	47	44	5	P0.7	I/O	Standard IO port
				AD7	I	Address bus
				T4CLKO	O	Timer 4 clock frequency output
64	48	1	6	P1.0	I/O	Standard IO port
				ADC0	I	ADC analog input channel 0
				PWM0_2	O	Enhanced PWM channel 0 output pin
				RxD2	I	Serial Port 2 Receive Pin

3.2.3 STC8F2K64S4 family pin descriptions

Number			Name	Class	Instruction
LQFP44	PDIP40	LQFP32			
2	7	2	P1.1	I/O	Standard IO Pins
			TxD2	O	Serial Port 2 Transport Pin
3	8	3	P1.2	I/O	Standard IO Pins
			SS	I	SPI Slave selection
			T2	I	Timer 2 external clock input
4	9	4	P1.3	I/O	Standard IO Pins
			MOSI	I/O	SPI master output slave input
			T2CLKO	O	Timer 2 clock frequency output
5	10	5	P1.4	I/O	Standard IO Pins
			MISO	I/O	SPI master input slave output
			SDA	I/O	I2C Data Interface Line
6			P4.4	I/O	Standard IO Pins
			RD	O	External bus read signal line
			TxD_4	O	Serial Port 1 Transport Pin
7	11	6	P1.5	I/O	Standard IO Pins
			SCLK	I/O	SPI Clock line
			SCL	I/O	I2C Clock line
8	12	7	P1.6	I/O	Standard IO Pins

			RxD_3	I	Serial Port 1 Receive Pin
			XTALO	O	Output pin of external crystal
			MCLKO_2	O	Main clock frequency output
9	13	8	P1.7	I/O	Standard IO Pins
			TxD_3	O	Serial Port 1 Transport Pin
			XTALI	I	External crystal/external clock input pin
10	14		P4.5	I/O	Standard IO Pins
11	15		P4.6	I/O	Standard IO Pins
12	16		P4.7	I/O	Standard IO Pins
13	17	9	P5.4	I/O	Standard IO Pins
			RST	I	Reset Pine
			MCLKO	O	Main clock frequency output
14	18	10	Vcc	VCC	Source Pin

STC MCU

Number			Name	Class	Instruction
LQFP44	PDIP40	LQFP32			
15	19	11	P5.5	I/O	Standard IO Pins
16	20	12	Gnd	GND	GND
17			P4.0	I/O	Standard IO Pins
			WR_3	O	External bus write signal line
			RxD2_2	I	Serial Port 2 Receive Pin
18	21	13	P3.0	I/O	Standard IO Pins
			RxD	I	Serial Port 1 Receive Pin
			INT4	I	External interrupt 4
19	22	14	P3.1	I/O	Standard IO Pins
			TxD	O	Serial Port 1 Transport Pin
20	23	15	P3.2	I/O	Standard IO Pins
			INT0	I	External interrupt 0
			SCL_4	I/O	I2C Clock line
			SCLK_4	I/O	SPI Clock pin
21	24	16	P3.3	I/O	Standard IO Pins
			INT1	I	External interrupt 1
			SDA_4	I/O	I2C interface data line
			MISO_4	I/O	SPI master input slave output
22	25	17	P3.4	I/O	Standard IO Pins
			T0	I	Timer 0 external clock input
			T1CLKO	O	Timer 1 clock frequency output
			MOSI_4	I/O	SPI master output slave input
			CMPO	O	Comparator output
23	26	18	P3.5	I/O	Standard IO Pins
			T1	I	Timer 1 external clock input
			T0CLKO	O	Timer 0 clock divider output
			SS_4	I	SPI slave select pin (host output)
24	27	19	P3.6	I/O	Standard IO Pins
			INT2	I	External interrupt 2
			WR_2	O	External bus write signal line
			RxD_2	I	Receiver 1 of serial port 1
			CMP-	I	Comparator negative input

Number			Name	Class	Instruction
LQFP44	PDIP40	LQFP32			
25	28	20	P3.7	I/O	Standard IO Pins
			INT3	I	External interrupt 3
			RD_2	O	External bus read signal line
			TxD_2	O	Serial Port 1 Transport Pin
			CMP+	I	Comparator positive input
26	29		P4.1	I/O	Standard IO Pins
			ALE	O	Address latch signal
			CMPO_2	O	Comparator output
27	30	21	P2.0	I/O	Standard IO Pins
			A8	I	Address bus
			RSTSV	-	The initial level of the port can be configured during ISP download
28			P4.2	I/O	Standard IO Pins
			RD_3	O	External bus read signal line
			TxD2_2	O	Serial Port 2 Transport Pin
29	31	22	P2.1	I/O	Standard IO Pins
			A9	I	Address bus
30	32	23	P2.2	I/O	Standard IO Pins
			A10	I	Address bus
			SS_2	I	SPI slave select pin (host output)
31	33	24	P2.3	I/O	Standard IO Pins
			A11	I	Address bus
			MOSI_2	I/O	SPI master output slave input
32	34	25	P2.4	I/O	Standard IO Pins
			A12	I	Address bus
			MISO_2	I/O	SPI master input slave output
			SDA_2	I/O	I2C interface data line
33	35	26	P2.5	I/O	Standard IO Pins
			A13	I	Address bus
			SCLK_2	I/O	SPI Clock line
			SCL_2	I/O	I2C Clock line
34	36	27	P2.6	I/O	Standard IO Pins
			A14	I	Address bus
35	37	28	P2.7	I/O	Standard IO Pins
			A15	I	Address bus

Number			Name	Class	Instruction
LQFP44	PDIP40	LQFP32			
36	38	29	P0.0	I/O	Standard IO port
			AD0	I	Address bus
			RxD3	I	Serial Port 3 Receive Pin
37	39	30	P0.1	I/O	Standard IO port
			AD1	I	Address bus
			TxD3	O	Serial Port 3 Transport Pin
38	40	31	P0.2	I/O	Standard IO port
			AD2	I	Address bus
			RxD4	I	Serial Port 4 Receive Pin
39			P4.3	I/O	Standard IO port
			WR	O	External bus write signal line
			RxD_4	I	Serial Port 1 Receive Pin
40	1	32	P0.3	I/O	Standard IO port
			AD3	I	Address bus
			TxD4	O	Serial Port 4 Transport Pin
41	2		P0.4	I/O	Standard IO port
			AD4	I	Address bus
			T3	I	Timer 3 external clock input
42	3		P0.5	I/O	Standard IO port
			AD5	I	Address bus
			T3CLKO	O	Timer 3 clock frequency output
43	4		P0.6	I/O	Standard IO port
			AD6	I	Address bus
			T4	I	Timer 4 external clock input
44	5		P0.7	I/O	Standard IO port
			AD7	I	Address bus
			T4CLKO	O	Timer 4 clock frequency output
1	6	1	P1.0	I/O	Standard IO port
			RxD2	I	Serial Port 2 Receive Pin

3.2.4 STC8F2K64S2 family pin descriptions

Number			Name	Class	Instruction
LQFP44	PDIP40	LQFP32			
2	7	2	P1.1	I/O	Standard IO Pins
			TxD2	O	Serial Port 2 Transport Pin
3	8	3	P1.2	I/O	Standard IO Pins
			SS	I	SPI Host output slave input
			T2	I	Timer 2 external clock input
4	9	4	P1.3	I/O	Standard IO Pins
			MOSI	I/O	SPI master output slave input
			T2CLKO	O	Timer 2 clock frequency output
5	10	5	P1.4	I/O	Standard IO Pins
			MISO	I/O	SPI master input slave output
			SDA	I/O	I2C interface data line
6			P4.4	I/O	Standard IO Pins
			RD	O	External bus read signal line
			TxD_4	O	Serial Port 1 Transport Pin
7	11	6	P1.5	I/O	Standard IO Pins
			SCLK	I/O	SPI Clock pin
			SCL	I/O	I2C Clock pin
8	12	7	P1.6	I/O	Standard IO Pins
			RxD_3	I	Serial Port 1 Receive Pin
			XTALO	O	Output pin of external crystal
			MCLKO_2	O	Main clock frequency output
9	13	8	P1.7	I/O	Standard IO Pins
			TxD_3	O	Serial Port 1 Transport Pin
			XTALI	I	External crystal/external clock input pin
10	14		P4.5	I/O	Standard IO Pins
11	15		P4.6	I/O	Standard IO Pins
12	16		P4.7	I/O	Standard IO Pins
13	17	9	P5.4	I/O	Standard IO Pins
			RST	I	Reset pin
			MCLKO	O	Main clock frequency output
14	18	10	Vcc	VCC	VCC

Number			Name	Class	Instruction
LQFP44	PDIP40	LQFP32			
15	19	11	P5.5	I/O	Standard IO Pins
16	20	12	Gnd	GND	GND
17			P4.0	I/O	Standard IO Pins
			WR_3	O	External bus write signal line
			RxD2_2	I	Serial Port 2 Receive Pin
18	21	13	P3.0	I/O	Standard IO Pins
			RxD	I	Serial Port 1 Receive Pin
			INT4	I	External interrupt 4
19	22	14	P3.1	I/O	Standard IO Pins
			TxD	O	Serial Port 1 Transport Pin
20	23	15	P3.2	I/O	Standard IO Pins
			INT0	I	External interrupt 0
			SCL_4	I/O	I2C Clock line
			SCLK_4	I/O	SPI Clock line
21	24	16	P3.3	I/O	Standard IO Pins
			INT1	I	External interrupt 1
			SDA_4	I/O	I2C interface data line
			MISO_4	I/O	SPI master input slave output
22	25	17	P3.4	I/O	Standard IO Pins
			T0	I	Timer 0 external clock input
			T1CLKO	O	Timer 1 clock frequency output
			MOSI_4	I/O	SPI master output slave input
			CMPO	O	Comparator output
23	26	18	P3.5	I/O	Standard IO Pins
			T1	I	Timer 1 external clock input
			T0CLKO	O	Timer 0 clock divider output
			SS_4	I	SPI slave select pin (host output)
24	27	19	P3.6	I/O	Standard IO Pins
			INT2	I	External interrupt 2
			WR_2	O	External bus write signal line
			RxD_2	I	Serial Port 1 Receive Pin
			CMP-	I	Comparator negative input

Number			Name	Class	Instrcution
LQFP44	PDIP40	LQFP32			
25	28	20	P3.7	I/O	Standard IO Pins
			INT3	I	External Interrupt 3
			RD_2	O	External bus read signal line
			TxD_2	O	Serial Port 1 Transport Pin
			CMP+	I	Comparator positive input
26	29		P4.1	I/O	Standard IO Pins
			ALE	O	Address latch signal
			CMPO_2	O	Comparator output
27	30	21	P2.0	I/O	Standard IO Pins
			A8	I	Address bus
			RSTSV	-	The initial level of the port can be configured during ISP download
28			P4.2	I/O	Standard IO Pins
			RD_3	O	External bus read signal line
			TxD2_2	O	Serial Port 2 Transport Pin
29	31	22	P2.1	I/O	Standard IO Pins
			A9	I	Address bus
30	32	23	P2.2	I/O	Standard IO Pins
			A10	I	Address bus
			SS_2	I	SPI Host output slave input
31	33	24	P2.3	I/O	Standard IO Pins
			A11	I	Address bus
			MOSI_2	I/O	SPI master output slave input
32	34	25	P2.4	I/O	Standard IO Pins
			A12	I	Address bus
			MISO_2	I/O	SPI master input slave output
			SDA_2	I/O	I2C interface data line
33	35	26	P2.5	I/O	Standard IO Pins
			A13	I	Address bus
			SCLK_2	I/O	SPI Clock line
			SCL_2	I/O	I2C Clock line
34	36	27	P2.6	I/O	Standard IO Pins
			A14	I	Address bus
35	37	28	P2.7	I/O	Standard IO Pins
			A15	I	GND

Number			Name	Class	Instruction
LQFP44	PDIP40	LQFP32			
36	38	29	P0.0	I/O	Standard IO Pins
			AD0	I	Address bus
37	39	30	P0.1	I/O	Standard IO Pins
			AD1	I	Address bus
38	40	31	P0.2	I/O	Standard IO Pins
			AD2	I	Address bus
39			P4.3	I/O	Standard IO Pins
			WR	O	External bus write signal line
40	1	32	P0.3	I/O	Standard IO Pins
			AD3	I	Address bus
41	2		P0.4	I/O	Standard IO Pins
			AD4	I	Address bus
			T3	I	Timer 3 external clock input
42	3		P0.5	I/O	Standard IO Pins
			AD5	I	Address bus
			T3CLKO	O	Timer 3 clock frequency output
43	4		P0.6	I/O	Standard IO Pins
			AD6	I	Address bus
			T4	I	Timer 4 external clock input
44	5		P0.7	I/O	Standard IO Pins
			AD7	I	Address bus
			T4CLKO	O	Timer 4 clock frequency output
1	6	1	P1.0	I/O	Standard IO Pins
			RxD2	I	Serial Port 2 Receive Pin

3.3 Function Pin Switch

3.3.1 Function pin related register

Symbol	Description	addr	Bit address and symbol								Reset value
			B7	B6	B5	B4	B3	B2	B1	B0	
BUS_SPEED	Bus speed control register	A1H	RW_S[1:0]						SPEED[1:0]		00xx,xx00
P_SW1	Peripheral Port Switch Register 1	A2H	S1_S[1:0]		CCP_S[1:0]		SPI_S[1:0]		0	-	nn00,000x
P_SW2	Peripheral Port Switch Register 2	BAH	EAXFR	~~CAN_S~~	I2C_S[1:0]		CMPO_S	S4_S	S3_S	S2_S	0x00,0000

Symbol	Description	addr	Bit address and symbol								Reset value
			B7	B6	B5	B4	B3	B2	B1	B0	
PWM0CR	PWM0 control register	FF04H	ENC0O	C0INI	-	C0_S[1:0]		EC0I	EC0T2SI	EC0T1SI	00x0,0000
PWM1CR	PWM1 control register	FF14H	ENC1O	C1INI	-	C1_S[1:0]		EC1I	EC1T2SI	EC1T1SI	00x0,0000
PWM2CR	PWM2 control register	FF24H	ENC2O	C2INI	-	C2_S[1:0]		EC2I	EC2T2SI	EC2T1SI	00x0,0000
PWM3CR	PWM3 control register	FF34H	ENC3O	C3INI	-	C3_S[1:0]		EC3I	EC3T2SI	EC3T1SI	00x0,0000
PWM4CR	PWM4 control register	FF44H	ENC4O	C4INI	-	C4_S[1:0]		EC4I	EC4T2SI	EC4T1SI	00x0,0000
PWM5CR	PWM5 control register	FF54H	ENC5O	C5INI	-	C5_S[1:0]		EC5I	EC5T2SI	EC5T1SI	00x0,0000
PWM6CR	PWM6 control register	FF64H	ENC6O	C6INI	-	C6_S[1:0]		EC6I	EC6T2SI	EC6T1SI	00x0,0000
PWM7CR	PWM7 control register	FF74H	ENC7O	C7INI	-	C7_S[1:0]		EC7I	EC7T2SI	EC7T1SI	00x0,0000
CKSEL	Clock select registor	FE00H	MCLKODIV[3:0]				MCLKO_S	-	MCKSEL[1:0]		0000,0000

Bus speed control register

Symbol	addr	B7	B6	B5	B4	B3	B2	B1	B0
BUS_SPEED	A1H	RW_S[1:0]						SPEED[1:0]	

RW_S[1:0]：External bus RD/WR controlling choosing bit

RW_S[1:0]	RD	WR
00	P4.4	P4.3
01	P3.7	P3.6
10	P4.2	P4.0
11	Reserved	

Periphery Port Switch Control Register 1

Symbol	addr	B7	B6	B5	B4	B3	B2	B1	B0
P_SW1	A2H	S1_S[1:0]		CCP_S[1:0]		SPI_S[1:0]		0	-

S1_S[1:0]：Serial Port 1 Function pin select bit

S1_S[1:0]	RxD	TxD
00	P3.0	P3.1
01	P3.6	P3.7
10	P1.6	P1.7
11	P4.3	P4.4

CCP_S[1:0]：PCA Function pin select bit

CCP_S[1:0]	ECI	CCP0	CCP1	CCP2	CCP3
00	P1.2	P1.7	P1.6	P1.5	P1.4
01	P2.2	P2.3	P2.4	P2.5	P2.6
10	P7.4	P7.0	P7.1	P7.2	P7.3
11	P3.5	P3.3	P3.2	P3.1	P3.0

SPI_S[1:0]：SPI Function pin select bit

SPI_S[1:0]	SS	MOSI	MISO	SCLK
00	P1.2	P1.3	P1.4	P1.5
01	P2.2	P2.3	P2.4	P2.5
10	P7.4	P7.5	P7.6	P7.7
11	P3.5	P3.4	P3.3	P3.2

Periphery Port Switch Control Register 2

Symbol	addr	B7	B6	B5	B4	B3	B2	B1	B0
P_SW2	BAH	EAXFR	~~CAN_S~~	I2C_S[1:0]		CMPO_S	S4_S	S3_S	S2_S

I2C_S[1:0]：I^2C Function pin select bit

I2C_S[1:0]	SCL	SDA
00	P1.5	P1.4
01	P2.5	P2.4
10	P7.7	P7.6
11	P3.2	P3.3

CMPO_S：Comparator output Function pin select bit

CMPO_S	CMPO
0	P3.4
1	P4.1

S4_S：Serial Port 4 Function pin select bit

S4_S	RxD4	TxD4
0	P0.2	P0.3
1	P5.2	P5.3

S3_S：Serial Port 1 Function pin select bit

S3_S	RxD3	TxD3
0	P0.0	P0.1
1	P5.0	P5.1

S2_S：Serial Port 2 Function pin select bit

S2_S	RxD2	TxD2
0	P1.0	P1.1
1	P4.0	P4.2

Clock select registor

Symbol	addr	B7	B6	B5	B4	B3	B2	B1	B0
CKSEL	FE00H	MCLKODIV[3:0]				MCLKO_S	-	MCKSEL[1:0]	

MCLKO_S：Main clock output pin select bit

MCLKO_S	MCLKO
0	P5.4
1	P1.6

Enhanced PWM control register

Symbol	addr	B7	B6	B5	B4	B3	B2	B1	B0

PWM0CR	FF04H	ENC0O	C0INI	-	C0_S[1:0]	EC0I	EC0T2SI	EC0T1SI
PWM1CR	FF14H	ENC1O	C1INI	-	C1_S[1:0]	EC1I	EC1T2SI	EC1T1SI
PWM2CR	FF24H	ENC2O	C2INI	-	C2_S[1:0]	EC2I	EC2T2SI	EC2T1SI
PWM3CR	FF34H	ENC3O	C3INI	-	C3_S[1:0]	EC3I	EC3T2SI	EC3T1SI
PWM4CR	FF44H	ENC4O	C4INI	-	C4_S[1:0]	EC4I	EC4T2SI	EC4T1SI
PWM5CR	FF54H	ENC5O	C5INI	-	C5_S[1:0]	EC5I	EC5T2SI	EC5T1SI
PWM6CR	FF64H	ENC6O	C6INI	-	C6_S[1:0]	EC6I	EC6T2SI	EC6T1SI
PWM7CR	FF74H	ENC7O	C7INI	-	C7_S[1:0]	EC7I	EC7T2SI	EC7T1SI

C0_S[1:0]：Enhanced PWM channel 0 output pin select bit

C0_S[1:0]	PWM0
00	P2.0
01	P1.0
10	P6.0
11	Reserved

C1_S[1:0]：Enhanced PWM channel 1 output pin select bit

C1_S[1:0]	PWM1
00	P2.1
01	P1.1
10	P6.1
11	Reserved

C2_S[1:0]：Enhanced PWM channel 2 output pin select bit

C2_S[1:0]	PWM2
00	P2.2
01	P1.2
10	P6.2
11	Reserved

C3_S[1:0]：Enhanced PWM channel 3 output pin select bit

C3_S[1:0]	PWM3
00	P2.3
01	P1.3
10	P6.3
11	Reserved

C4_S[1:0]：Enhanced PWM channel 4 output pin select bit

C4_S[1:0]	PWM4
00	P2.4
01	P1.4
10	P6.4
11	Reserved

C5_S[1:0]：Enhanced PWM channel 5 output pin select bit

C5_S[1:0]	PWM5
00	P2.5
01	P1.5

STC MCU

10	P6.5
11	Reserved

C6_S[1:0]：Enhanced PWM channel 6 output pin select bit

C6_S[1:0]	PWM6
00	P2.6
01	P1.6
10	P6.6
11	Reserved

C7_S[1:0]：Enhanced PWM channel 7 output pin select bit

C7_S[1:0]	PWM7
00	P2.7
01	P1.7
10	P6.7
11	Reserved

3.4 Sample Program

3.4.1 Serial 1 switch

Assembly code

```
P_SW1   DATA    0A2H

        ORG     0000H
        LJMP    MAIN

        ORG     0100H
MAIN:
        MOV     SP, #3FH

        MOV     P_SW1,#00H          ;RXD/P3.0, TXD/P3.1
;       MOV     P_SW1,#40H          ;RXD_2/P3.6, TXD_2/P3.7
;       MOV     P_SW1,#80H          ;RXD_3/P1.6, TXD_3/P1.7
;       MOV     P_SW1,#0C0H         ;RXD_4/P4.3, TXD_4/P4.4

        SJMP    $

        END
```

```
C Code
#include "reg51.h"

sfr P_SW1 = 0xa2;

void main()
{
        P_SW1 = 0x00;           //RXD/P3.0, TXD/P3.1
//      P_SW1 = 0x40;           //RXD_2/P3.6, TXD_2/P3.7
```

```
//          P_SW1 = 0x80;               //RXD_3/P1.6, TXD_3/P1.7
//          P_SW1 = 0xc0;               //RXD_4/P4.3, TXD_4/P4.4

            while (1);
}
```

3.4.2 Serial 2 switch

Assembly code

```
P_SW2       DATA        0BAH

            ORG         0000H
            LJMP        MAIN

            ORG         0100H
MAIN:
            MOV         SP, #3FH

            MOV         P_SW2,#00H              ;RXD2/P1.0, TXD2/P1.1
;           MOV         P_SW2,#01H              ;RXD2_2/P4.0, TXD2_2/P4.2

            SJMP        $

            END
```

C Code

```
#include "reg51.h"

sfr P_SW2 = 0xba;

void main()
{
            P_SW2 = 0x00;               //RXD2/P1.0, TXD2/P1.1
//          P_SW2 = 0x01;               //RXD2_2/P4.0, TXD2_2/P4.2

            while (1);
}
```

3.4.3 Serial 3 switch

Assembly code

```
P_SW2       DATA        0BAH

            ORG         0000H
            LJMP        MAIN

            ORG         0100H
MAIN:
            MOV         SP, #3FH

            MOV         P_SW2,#00H              ;RXD3/P0.0, TXD3/P0.1
;           MOV         P_SW2,#02H              ;RXD3_2/P5.0, TXD3_2/P5.1

            SJMP        $
```

```
        END
```

C CODE

```
#include "reg51.h"

sfr P_SW2 = 0xba;

void main()
{
        P_SW2 = 0x00;           // RXD3/P0.0, TXD3/P0.1
//      P_SW2 = 0x02;           // RXD3_2/P5.0, TXD3_2/P5.1

        while (1);
}
```

3.4.4 Serial 4 switch

Assembly code

```
P_SW2   DATA    0BAH

        ORG     0000H
        LJMP    MAIN

        ORG     0100H
MAIN:
        MOV     SP, #3FH

        MOV     P_SW2,#00H          ;RXD4/P0.2, TXD4/P0.3
;       MOV     P_SW2,#04H          ;RXD4_2/P5.2, TXD4_2/P5.3

        SJMP    $

        END
```

C CODE

```
#include "reg51.h"

sfr P_SW2 = 0xba;

void main()
{
        P_SW2 = 0x00;           //RXD4/P0.2, TXD4/P0.3
//      P_SW2 = 0x04;           //RXD4_2/P5.2, TXD4_2/P5.3

        while (1);
}
```

3.4.5 SPI switch

Assembly code

```
P_SW1   DATA    0A2H
```

```
        ORG     0000H
        LJMP    MAIN

        ORG     0100H
MAIN:
        MOV     SP, #3FH

        MOV     P_SW1,#00H          ;SS/P1.2, MOSI/P1.3, MISO/P1.4, SCLK/P1.5
;       MOV     P_SW1,#04H          ;SS_2/P2.2, MOSI_2/P2.3, MISO_2/P2.4, SCLK_2/P2.5
;       MOV     P_SW1,#08H          ;SS_3/P7.4, MOSI_3/P7.5, MISO_3/P7.6, SCLK_3/P7.7
;       MOV     P_SW1,#0CH          ;SS_4/P3.5, MOSI_4/P3.4, MISO_4/P3.3, SCLK_4/P3.2

        SJMP    $

        END
```

C CODE

```
#include "reg51.h"

sfr P_SW1 = 0xa2;

void main()
{
        P_SW1 = 0x00;           //SS/P1.2, MOSI/P1.3, MISO/P1.4, SCLK/P1.5
//      P_SW1 = 0x04;           //SS_2/P2.2, MOSI_2/P2.3, MISO_2/P2.4, SCLK_2/P2.5
//      P_SW1 = 0x08;           //SS_3/P7.4, MOSI_3/P7.5, MISO_3/P7.6, SCLK_3/P7.7
//      P_SW1 = 0x0c;           //SS_4/P3.5, MOSI_4/P3.4, MISO_4/P3.3, SCLK_4/P3.2

        while (1);
}
```

3.4.6 PWM switch

Assembly code

```
P_SW2       DATA    0BAH
PWM0CR      EQU     0FF04H
PWM1CR      EQU     0FF14H
PWM2CR      EQU     0FF24H
PWM3CR      EQU     0FF34H
PWM4CR      EQU     0FF44H
PWM5CR      EQU     0FF54H
PWM6CR      EQU     0FF64H
PWM7CR      EQU     0FF74H

            ORG     0000H
            LJMP    MAIN

            ORG     0100H
MAIN:
            MOV     SP, #3FH

            MOV     P_SW2,#80H
            MOV     A,#00H          ;PWM0/P2.0
;           MOV     A,#08H          ;PWM0_2/P1.0
;           MOV     A,#10H          ;PWM0_3/P6.0
```

```
        MOV     DPTR,#PWM0CR
        MOVX    @DPTR,A
        MOV     A,#00H          ;PWM1/P2.1
;       MOV     A,#08H          ;PWM1_2/P1.1
;       MOV     A,#10H          ;PWM1_3/P6.1
        MOV     DPTR,#PWM1CR
        MOVX    @DPTR,A
        MOV     A,#00H          ;PWM2/P2.2
;       MOV     A,#08H          ;PWM2_2/P1.2
;       MOV     A,#10H          ;PWM2_3/P6.2
        MOV     DPTR,#PWM2CR
        MOVX    @DPTR,A
        MOV     A,#00H          ;PWM3/P2.3
;       MOV     A,#08H          ;PWM3_2/P1.3
;       MOV     A,#10H          ;PWM3_3/P6.3
        MOV     DPTR,#PWM3CR
        MOVX    @DPTR,A
        MOV     A,#00H          ;PWM4/P2.4
;       MOV     A,#08H          ;PWM4_2/P1.4
;       MOV     A,#10H          ;PWM4_3/P6.4
        MOV     DPTR,#PWM4CR
        MOVX    @DPTR,A
        MOV     A,#00H          ;PWM5/P2.5
;       MOV     A,#08H          ;PWM5_2/P1.5
;       MOV     A,#10H          ;PWM5_3/P6.5
        MOV     DPTR,#PWM5CR
        MOVX    @DPTR,A
        MOV     A,#00H          ;PWM6/P2.6
;       MOV     A,#08H          ;PWM6_2/P1.6
;       MOV     A,#10H          ;PWM6_3/P6.6
        MOV     DPTR,#PWM6CR
        MOVX    @DPTR,A
        MOV     A,#00H          ;PWM7/P2.7
;       MOV     A,#08H          ;PWM7_2/P1.7
;       MOV     A,#10H          ;PWM7_3/P6.7
        MOV     DPTR,#PWM7CR
        MOVX    @DPTR,A
        MOV     P_SW2,#00H

        SJMP    $

    END
```

C CODE

```
#include "reg51.h"

#define PWM0CR      (*(unsigned char volatile xdata *)0xff04)
#define PWM1CR      (*(unsigned char volatile xdata *)0xff14)
#define PWM2CR      (*(unsigned char volatile xdata *)0xff24)
#define PWM3CR      (*(unsigned char volatile xdata *)0xff34)
#define PWM4CR      (*(unsigned char volatile xdata *)0xff44)
#define PWM5CR      (*(unsigned char volatile xdata *)0xff54)
#define PWM6CR      (*(unsigned char volatile xdata *)0xff64)
#define PWM7CR      (*(unsigned char volatile xdata *)0xff74)

sfr P_SW2 = 0xba;
```

```
void main()
{
        P_SW2 = 0x80;
        PWM0CR = 0x00;          //PWM0/P2.0
//      PWM0CR = 0x08;          //PWM0_2/P1.0
//      PWM0CR = 0x10;          //PWM0_3/P6.0
        PWM1CR = 0x00;          //PWM1/P2.1
//      PWM1CR = 0x08;          //PWM1_2/P1.1
//      PWM1CR = 0x10;          //PWM1_3/P6.1
        PWM2CR = 0x00;          //PWM2/P2.2
//      PWM2CR = 0x08;          //PWM2_2/P1.2
//      PWM2CR = 0x10;          //PWM2_3/P6.2
        PWM3CR = 0x00;          //PWM3/P2.3
//      PWM3CR = 0x08;          //PWM3_2/P1.3
//      PWM3CR = 0x10;          //PWM3_3/P6.3
        PWM4CR = 0x00;          //PWM4/P2.4
//      PWM4CR = 0x08;          //PWM4_2/P1.4
//      PWM4CR = 0x10;          //PWM4_3/P6.4
        PWM5CR = 0x00;          //PWM5/P2.5
//      PWM5CR = 0x08;          //PWM5_2/P1.5
//      PWM5CR = 0x10;          //PWM5_3/P6.5
        PWM6CR = 0x00;          //PWM6/P2.6
//      PWM6CR = 0x08;          //PWM6_2/P1.6
//      PWM6CR = 0x10;          //PWM6_3/P6.6
        PWM7CR = 0x00;          //PWM7/P2.7
//      PWM7CR = 0x08;          //PWM7_2/P1.7
//      PWM7CR = 0x10;          //PWM7_3/P6.7
        P_SW2 = 0x00;

        while (1);
}
```

3.4.7 PCA/CCP/PWM switch

Assembly code

```
P_SW1   DATA    0A2H

        ORG     0000H
        LJMP    MAIN

        ORG     0100H
MAIN:
        MOV     SP, #3FH

        MOV     P_SW1,#00H      ;ECI/P1.2, CCP0/P1.7, CCP1/P1.6, CCP2/P1.5,CCP3/P1.4
;       MOV     P_SW1,#10H      ;ECI_2/P2.2, CCP0_2/P2.3, CCP1_2/P2.4, CCP2_2/P2.5,CCP3_2/P2.6
;       MOV     P_SW1,#20H      ;ECI_3/P7.4, CCP0_3/P7.0, CCP1_3/P7.1, CCP2_3/P7.2,CCP3_3/P7.3
;       MOV     P_SW1,#30H      ;ECI_4/P3.5, CCP0_4/P3.3, CCP1_4/P3.2, CCP2_4/P3.1,CCP3_4/P3.0

        SJMP    $

        END
```

C CODE

```
#include "reg51.h"
```

```
sfr P_SW1 = 0xa2;

void main()
{
        P_SW1 = 0x00;           //ECI/P1.2, CCP0/P1.7, CCP1/P1.6, CCP2/P1.5,CCP3/P1.4
//      P_SW1 = 0x10;           //ECI_2/P2.2, CCP0_2/P2.3, CCP1_2/P2.4, CCP2_2/P2.5,CCP3_2/P2.6
//      P_SW1 = 0x20;           //ECI_3/P7.4, CCP0_3/P7.0, CCP1_3/P7.1, CCP2_3/P7.2,CCP3_3/P7.3
//      P_SW1 = 0x30;           //ECI_4/P3.5, CCP0_4/P3.3, CCP1_4/P3.2, CCP2_4/P3.1,CCP3_4/P3.0

        while (1);
}
```

3.4.8 I2C switch

Assembly code

```
P_SW2   DATA    0BAH

        ORG     0000H
        LJMP    MAIN

        ORG     0100H
MAIN:
        MOV     SP, #3FH

        MOV     P_SW2,#00H          ;SCL/P1.5, SDA/P1.4
;       MOV     P_SW2,#10H          ;SCL_2/P2.5, SDA_2/P2.4
;       MOV     P_SW2,#20H          ;SCL_3/P7.7, SDA_3/P7.6
;       MOV     P_SW2,#30H          ;SCL_4/P3.2, SDA_4/P3.3

        SJMP    $

        END
```

C CODE

```
#include "reg51.h"

sfr P_SW2 = 0xba;

void main()
{
        P_SW2 = 0x00;           //SCL/P1.5, SDA/P1.4
//      P_SW2 = 0x10;           //SCL_2/P2.5, SDA_2/P2.4
//      P_SW2 = 0x20;           //SCL_3/P7.7, SDA_3/P7.6
//      P_SW2 = 0x30;           //SCL_4/P3.2, SDA_4/P3.3

        while (1);
}
```

3.4.9 Comparator output switch

Assembly code

```
P_SW2   DATA    0BAH
```

```
        ORG     0000H
        LJMP    MAIN

        ORG     0100H
MAIN:
        MOV     SP, #3FH

        MOV     P_SW2,#00H              ;CMPO/P3.4
;       MOV     P_SW2,#08H              ;CMPO_2/P4.1

        SJMP    $

        END
```

C CODE

```
#include "reg51.h"

sfr P_SW2 = 0xba;

void main()
{
        P_SW2 = 0x00;           //CMPO/P3.4
//      P_SW2 = 0x08;           //CMPO_2/P4.1

        while (1);
}
```

3.4.10 Master clock output switching

Assembly code

```
P_SW2   DATA    0BAH
CKSEL   EQU     0FE00H

        ORG     0000H
        LJMP    MAIN

        ORG     0100H
MAIN:
        MOV     SP, #3FH

        MOV     P_SW2,#80H
        MOV     A,#40H                  ;IRC24M/4 output via MCLKO/P5.4
;       MOV     A,#48H                  ;IRC24M/4 output via MCLKO_2/P1.6
;       MOV     A,#0E8H                 ;IRC24M/128 output via MCLKO_2/P1.6
        MOV     DPTR,#CKSEL
        MOVX    @DPTR,A
        MOV     P_SW2,#00H

        SJMP    $

        END
```

C CODE

```
#include "reg51.h"
```

```
#define CKSEL      (*(unsigned char volatile xdata *)0xfe00)

sfr P_SW2 = 0xba;

void main()
{
        P_SW2 = 0x80;
        CKSEL = 0x40;           //IRC24M/4 output via MCLKO/P5.4
//      CKSEL = 0x48;           //IRC24M/4 output via MCLKO_2/P1.6
//      CKSEL = 0xe8;           //IRC24M/128 output via MCLKO_2/P1.6
        P_SW2 = 0x00;

        while (1);
}
```

STC MCU

4 Package characteristics

4.1 LQFP64S package mechanical data（12mm*12mm）

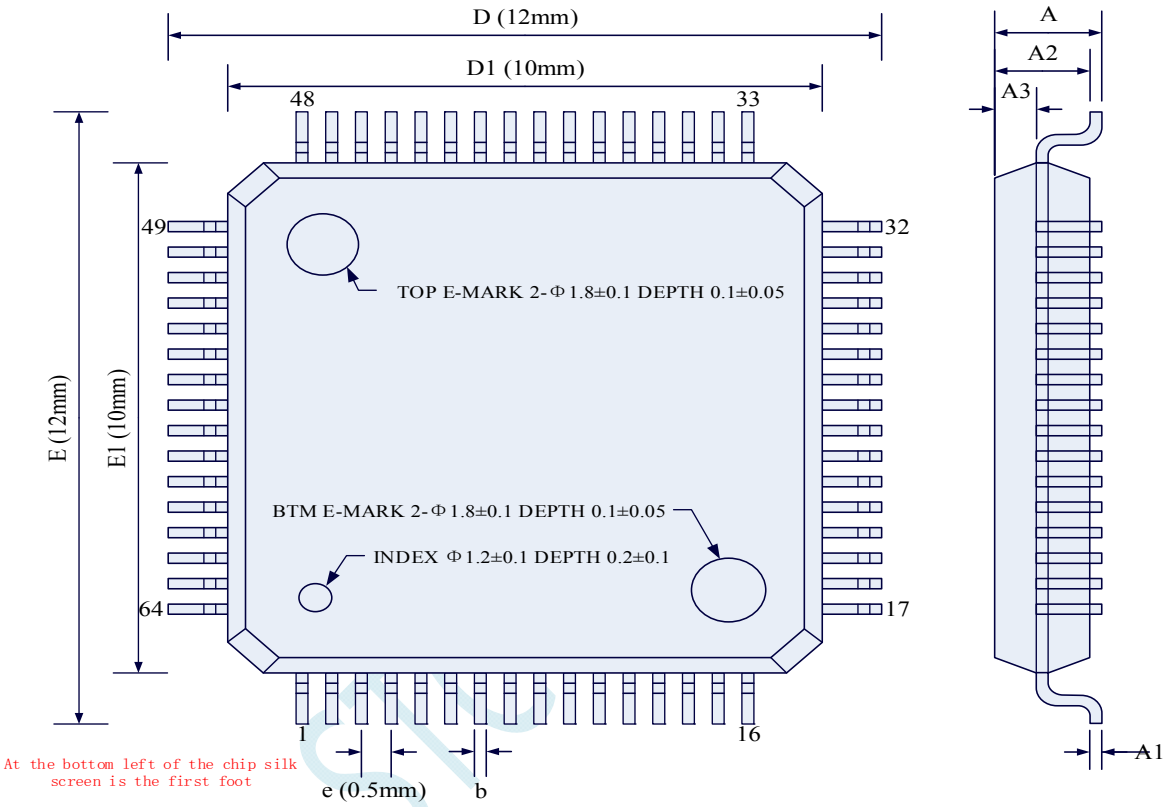

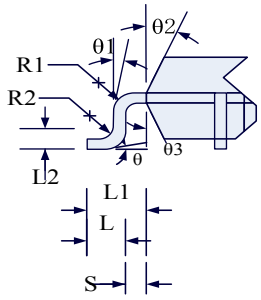

general size			
units of measurement：mm			
SYMBOL	MIN	TYP	MAX
A	-	-	1.60
A1	0.05	-	0.15
A2	1.35	1.40	1.45
A3	0.59	0.64	0.69
b	0.18	-	0.27
b1	0.17	0.20	0.23
c	0.13	-	0.18
c1	0.12	0.127	0.134
D	11.80	12.00	12.20
D1	9.90	10.00	10.10
E	11.80	12.00	12.20
E1	9.90	10.00	10.10
e	0.50BSC		
L	0.45	0.60	0.75
L1	1.00REF		
L2	0.25BSC		
R1	0.08	-	-
R2	0.08	-	0.20
S	0.20	-	-
θ	0°	3.5°	7°
θ1	0°	-	-
θ2	11°	12°	13°
θ3	11°	12°	13°

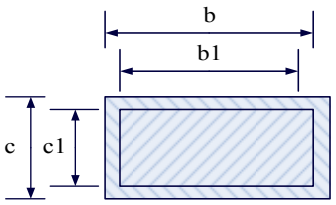

(interface diagram of A-A)

4.2 LQFP64L package mechanical data（16mm*16mm）

STC8 series does not have this package

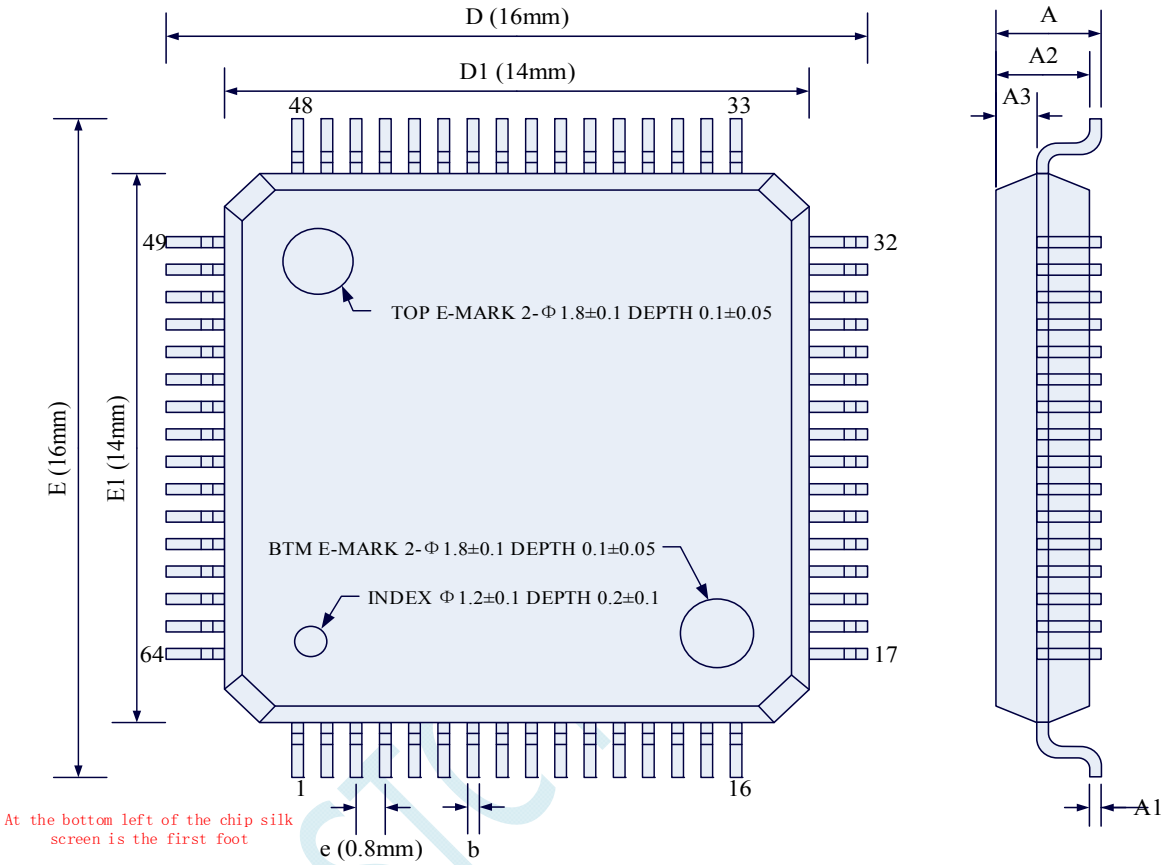

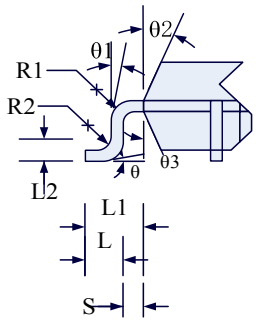

general size			
units of measurement：mm			
SYMBOL	MIN	TYP	MAX
A	-	-	1.60
A1	0.05	-	0.15
A2	1.35	1.40	1.45
A3	0.59	0.64	0.69
b	0.31	-	0.44
b1	0.30	0.35	0.40
c	0.13	-	0.18
c1	0.12	0.127	0.134
D	15.80	16.00	16.20
D1	13.90	14.00	14.10
E	15.80	16.00	16.20
E1	13.90	14.00	14.10
e	0.70	0.80	0.90
L	0.45	0.60	0.75
L1	1.00REF		
L2	0.25BSC		
R1	0.08	-	-
R2	0.08	-	0.20
S	0.20	-	-
θ	0°	3.5°	7°
θ1	0°	-	-
θ2	11°	12°	13°
θ3	11°	12°	13°

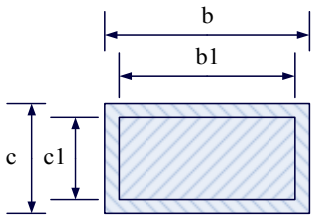

(interface diagram of A-A)

4.3 LQFP48 package mechanical data（9mm*9mm）

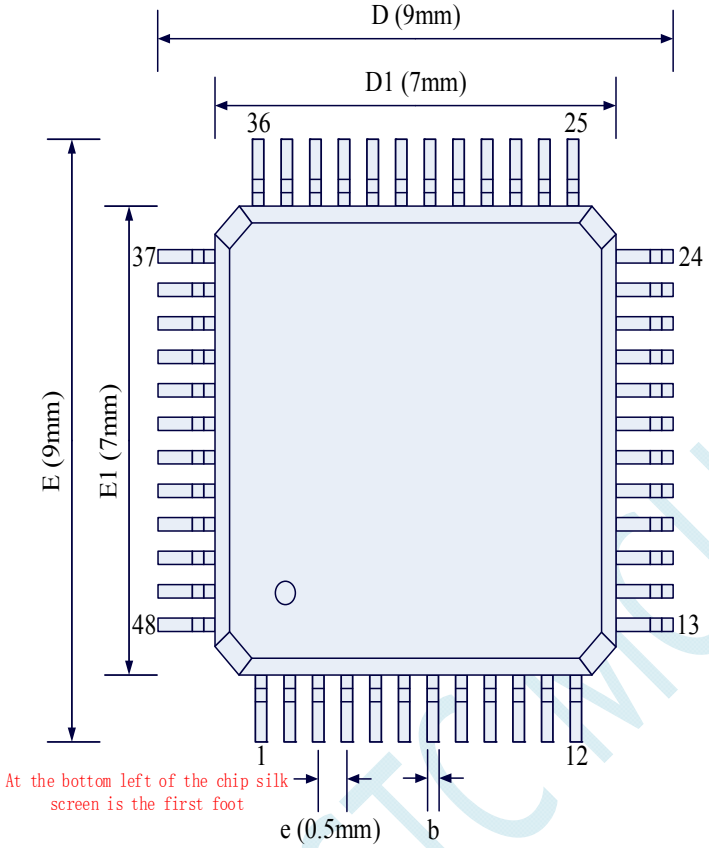

general size			
units of measurement：mm			
SYMBOL	MIN	TYP	MAX
A	-	-	1.60
A1	0.05	-	0.15
A2	1.35	1.40	1.45
A3	0.59	0.64	0.69
b	0.18	-	0.27
b1	0.30	0.35	0.40
c	0.13	-	0.18
c1	0.12	0.127	0.134
D	8.80	9.00	9.20
D1	6.90	7.00	7.10
E	8.80	9.00	9.20
E1	6.90	7.00	7.10
e	0.45	0.50	0.55
L	0.45	0.60	0.75
L1	1.00REF		
L2	0.25BSC		
R1	0.08	-	-
R2	0.08	-	0.20
S	0.20	-	-

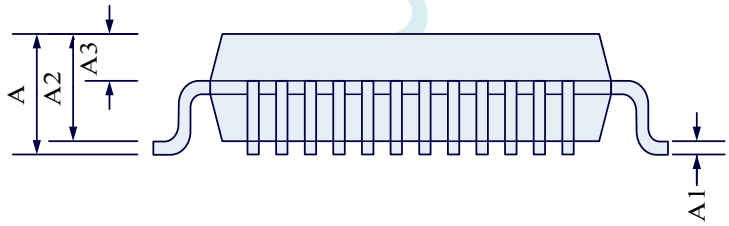

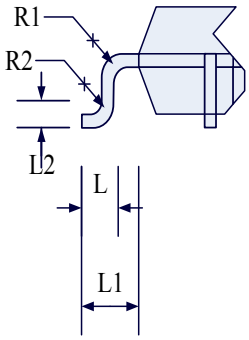

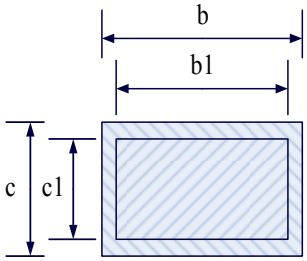

(interface diagram of A-A)

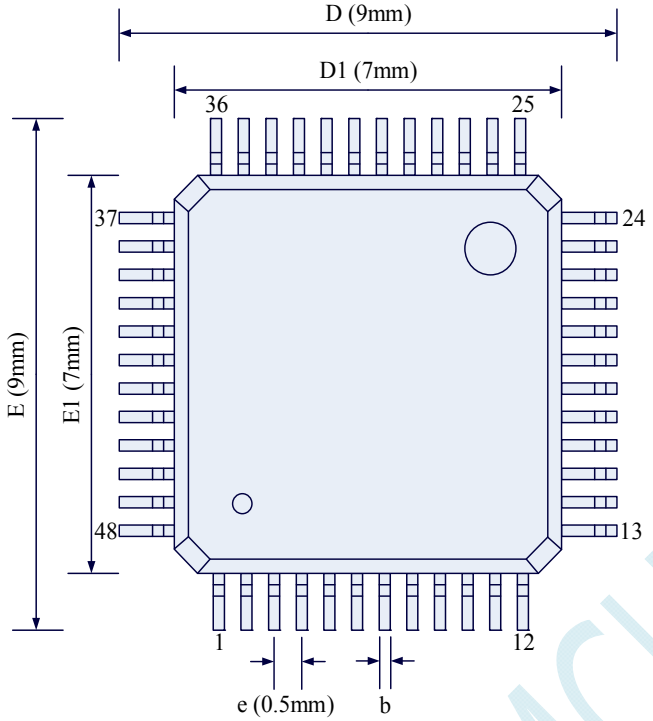

general size			
units of measurement：mm			
SYMBOL	MIN	TYP	MAX
A	-	-	1.60
A1	0.05	-	0.15
A2	1.35	1.40	1.45
A3	0.59	0.64	0.69
b	0.18	-	0.27
b1	0.30	0.35	0.40
c	0.13	-	0.18
c1	0.12	0.127	0.134
D	8.80	9.00	9.20
D1	6.90	7.00	7.10
E	8.80	9.00	9.20
E1	6.90	7.00	7.10
e	0.45	0.50	0.55
L	0.45	0.60	0.75
L1	1.00REF		
L2	0.25BSC		
R1	0.08	-	-
R2	0.08	-	0.20
S	0.20	-	-

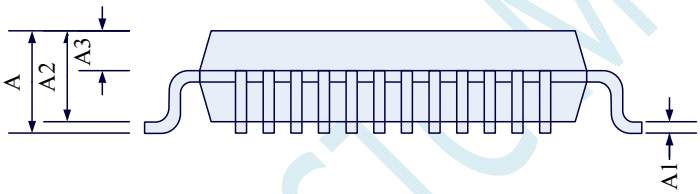

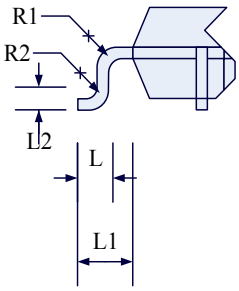

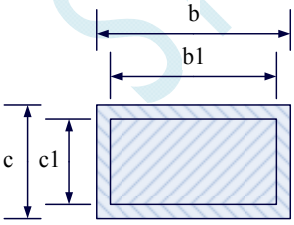

(interface diagram A-A)

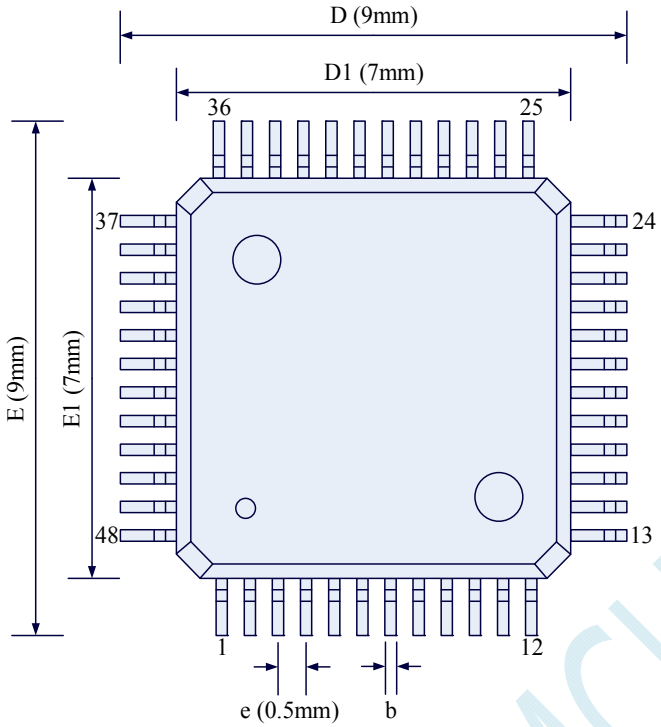

general size			
units of measurement：mm			
SYMBOL	MIN	TYP	MAX
A	-	-	1.60
A1	0.05	-	0.15
A2	1.35	1.40	1.45
A3	0.59	0.64	0.69
b	0.18	-	0.27
b1	0.30	0.35	0.40
c	0.13	-	0.18
c1	0.12	0.127	0.134
D	8.80	9.00	9.20
D1	6.90	7.00	7.10
E	8.80	9.00	9.20
E1	6.90	7.00	7.10
e	0.45	0.50	0.55
L	0.45	0.60	0.75
L1	1.00REF		
L2	0.25BSC		
R1	0.08	-	-
R2	0.08	-	0.20
S	0.20	-	-

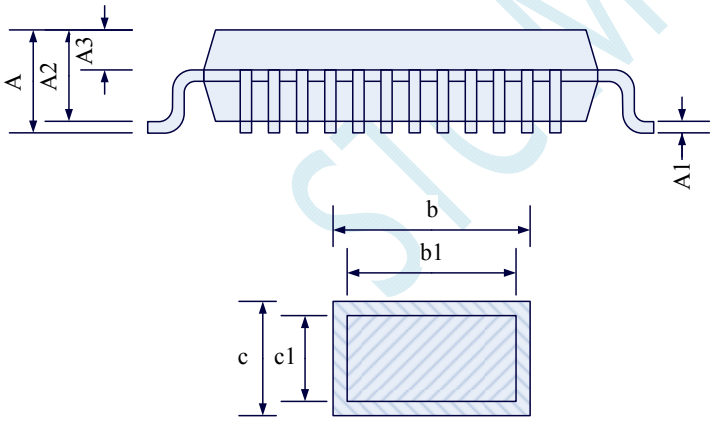

(interface diagram of A-A)

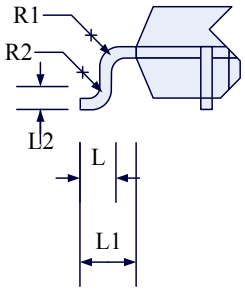

4.4 LQFP44 package mechanical data（12mm*12mm）

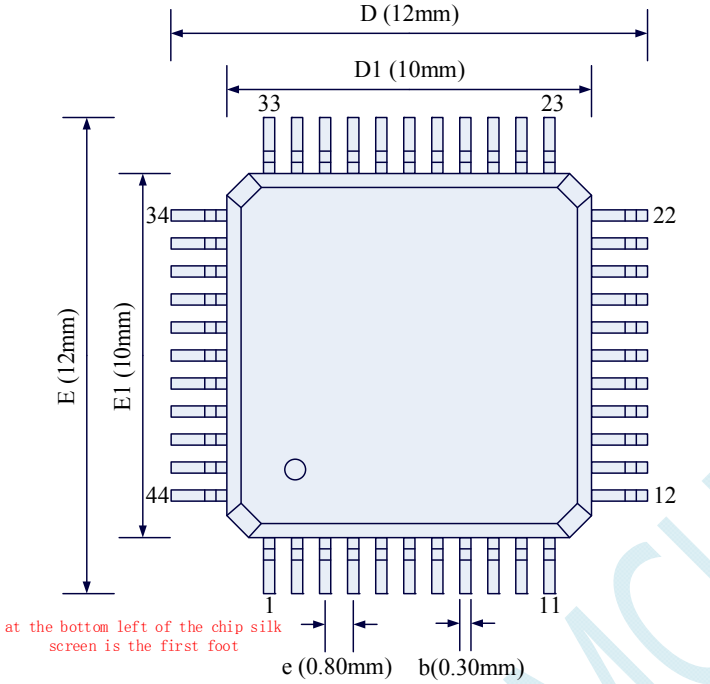

general size			
units of measurement：mm			
SYMBOL	MIN	TYP	MAX
A	-	-	1.60
A1	0.05	-	0.15
A2	1.35	1.40	1.45
A3	0.59	0.64	0.69
b	0.25	0.30	0.35
c1	0.09	-	0.16
D	11.80	12.00	12.20
D1	9.90	10.00	10.10
E	11.80	12.00	12.20
E1	9.90	10.00	10.10
e	0.70	0.80	0.90
L	0.45	0.60	0.75
L1	1.00REF		
L2	0.25BSC		
R1	0.08	-	-
R2	0.08	-	0.20

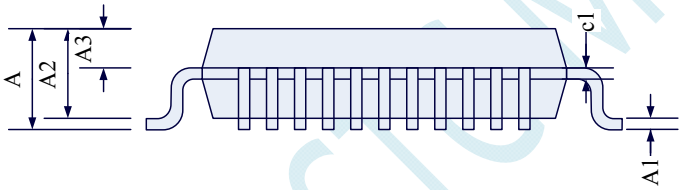

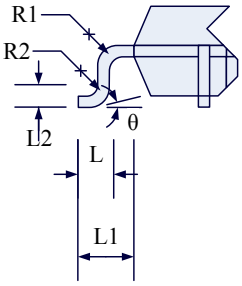

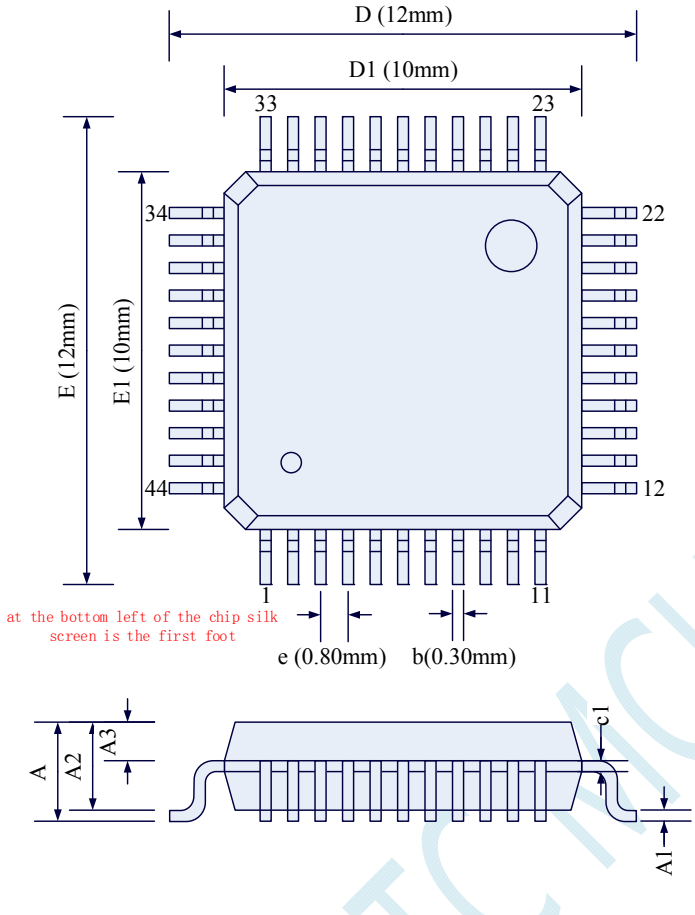

general size			
units of measurement：mm			
SYMBOL	MIN	TYP	MAX
A	-	-	1.60
A1	0.05	-	0.15
A2	1.35	1.40	1.45
A3	0.59	0.64	0.69
b	0.25	0.30	0.35
c1	0.09	-	0.16
D	11.80	12.00	12.20
D1	9.90	10.00	10.10
E	11.80	12.00	12.20
E1	9.90	10.00	10.10
e	0.70	0.80	0.90
L	0.45	0.60	0.75
L1	1.00REF		
L2	0.25BSC		
R1	0.08	-	-
R2	0.08	-	0.20

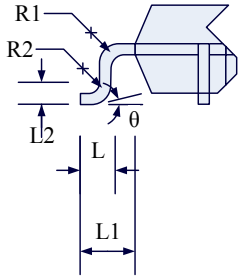

STCMCU

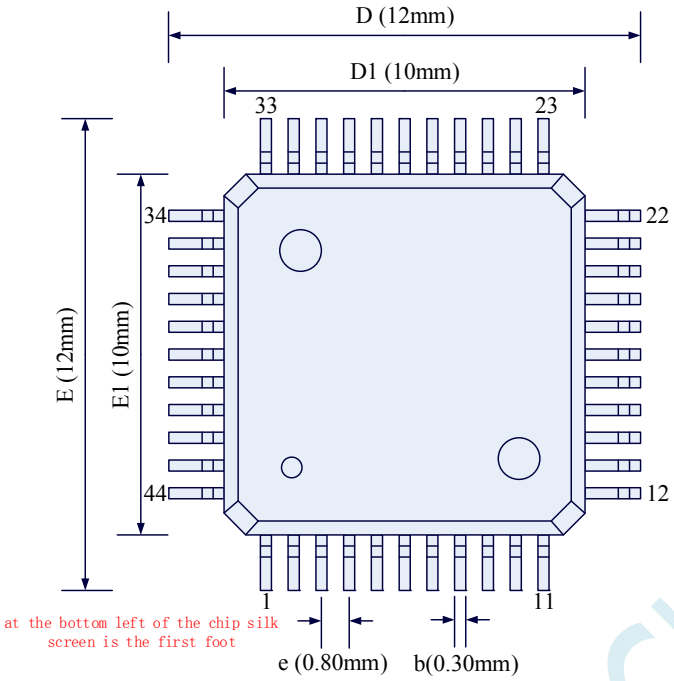

general size			
units of measurement：mm			
SYMBOL	MIN	TYP	MAX
A	-	-	1.60
A1	0.05	-	0.15
A2	1.35	1.40	1.45
A3	0.59	0.64	0.69
b	0.25	0.30	0.35
c1	0.09	-	0.16
D	11.80	12.00	12.20
D1	9.90	10.00	10.10
E	11.80	12.00	12.20
E1	9.90	10.00	10.10
e	0.70	0.80	0.90
L	0.45	0.60	0.75
L1	1.00REF		
L2	0.25BSC		
R1	0.08	-	-
R2	0.08	-	0.20

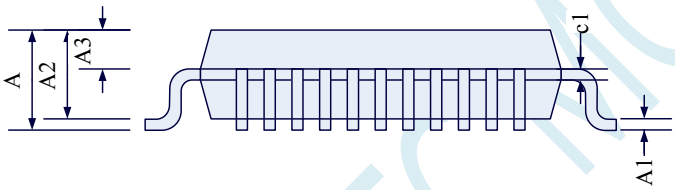

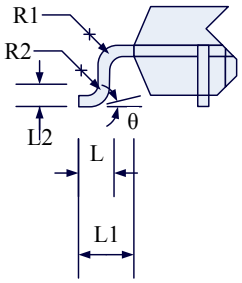

STCMCU

4.5 LQFP32 package mechanical data（9mm*9mm）

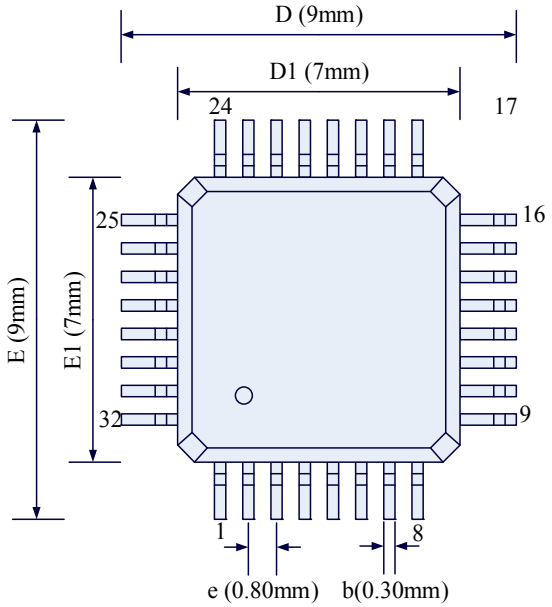

general size			
units of measurement：mm			
SYMBOL	MIN	TYP	MAX
A	1.45	1.55	1.65
A1	0.01	-	0.21
A2	1.35	1.40	1.45
A3	-	0.254	-
b	0.30	0.35	0.40
b1	0.31	0.37	0.43
c	-	0.127	-
D	8.80	9.00	9.20
D1	6.90	7.00	7.10
E	8.80	9.00	9.20
E1	6.90	7.00	7.10
e	0.70	0.80	0.90
L	0.43	-	0.71
L	1.00REF		
L1	0.25BSC		
R	0.1	-	0.25
R1	0.1	-	-
θ	0°	-	10°

at the bottom left of the chip silk screen is the first foot

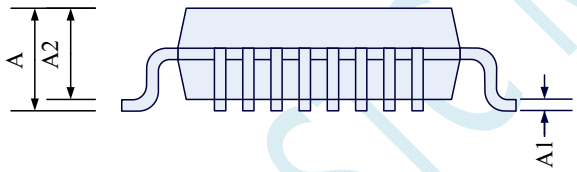

(interface diagram of A-A)

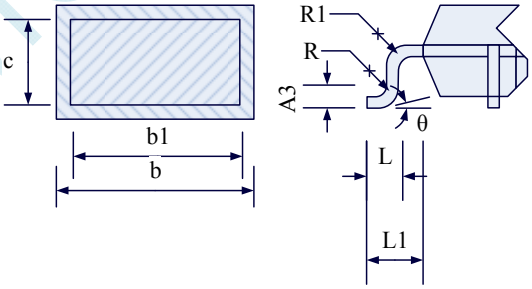

4.6 QFN32 package mechanical data（4mm*4mm）

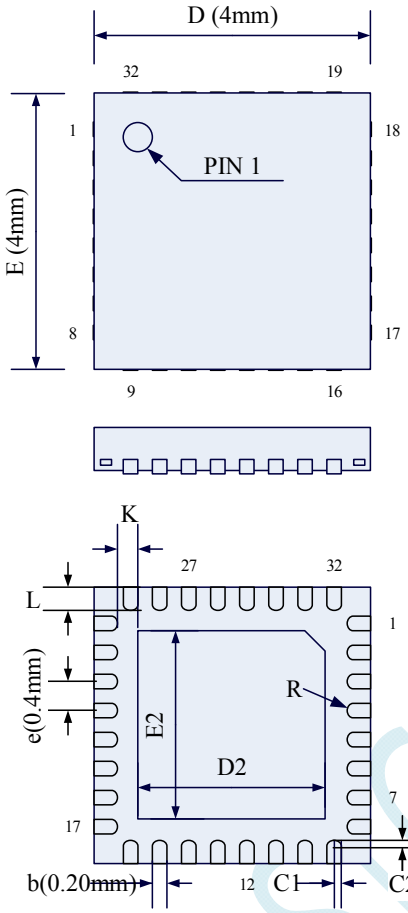

general size			
units of measurement：mm			
SYMBOL	MIN	TYP	MAX
A	0.70	0.75	0.80
A1	0	0.02	0.05
A2	0.50	0.55	0.60
A3	-	0.20REF	-
b	0.15	0.20	0.25
D	3.90	4.00	4.10
E	3.90	4.00	4.10
D2	2.60	2.70	2.80
E2	2.60	2.70	2.80
e	0.30	0.40	0.50
L	0.35	0.40	0.45
K	0.25REF		
R	0.09	-	-
C1	-	0.16	-
C2	-	0.16	-

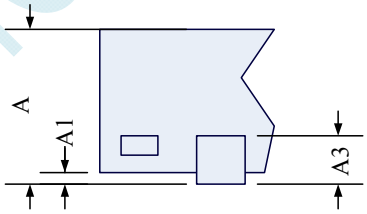

4.7 PDIP40 package mechanical data

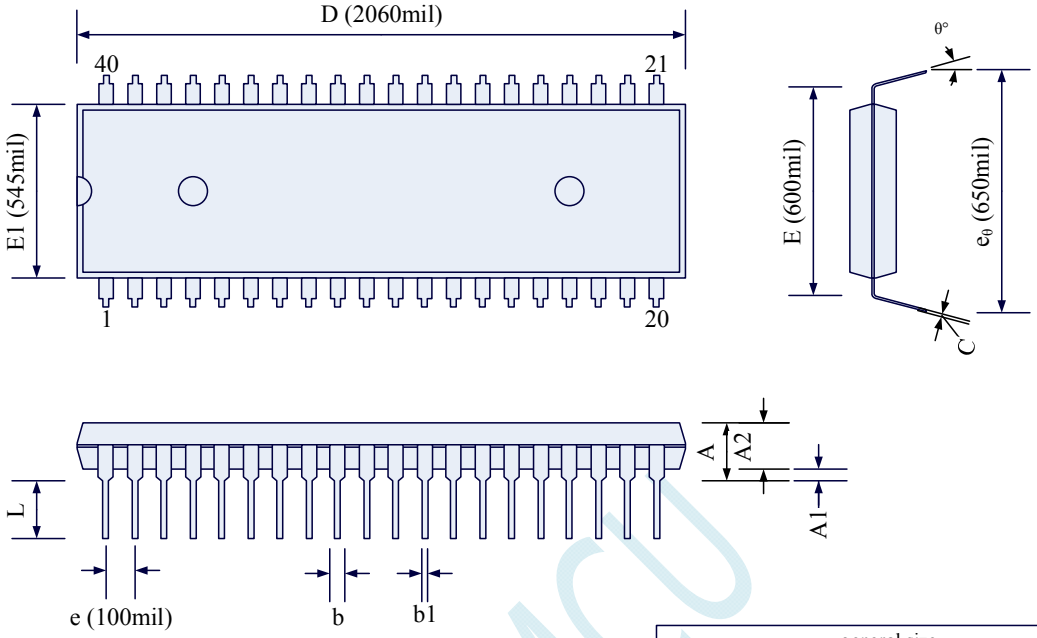

general size			
units of measurement：mil			
SYMBOL	MIN	TYP	MAX
A	-	-	190
A1	15	-	20
A2	150	155	160
b	45	-	67
b1	15	-	21
C	8	-	15
D	2025	2060	2070
E	600 BSC		
E1	540	545	550
e_θ	630	650	690
L	120	130	140
θ	0°	7°	15°

STC MCU

4.8 TSSOP20 package mechanical data

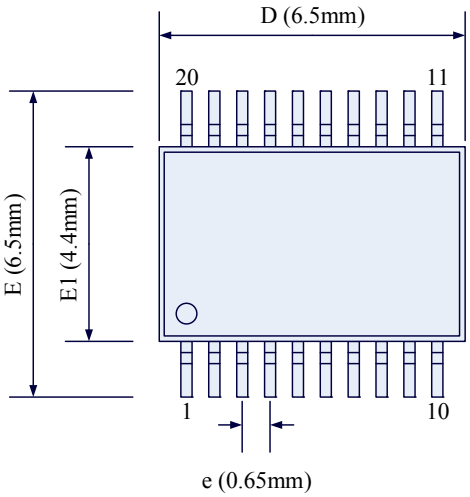

general size			
units of measurement：mm			
SYMBOL	MIN	TYP	MAX
A	-	-	1.20
A1	0.05	-	0.15
A2	0.90	1.00	1.05
A3	0.34	0.44	0.54
b	0.20	0.24	0.28
D	6.40	6.50	6.60
E	6.20	6.50	6.60
E1	4.30	4.40	4.50
e	0.65BSC		
L	0.45	0.60	0.75
L1	1.00REF		
L2	0.25BSC		
R1	0.09	-	-
R2	0.09	-	-

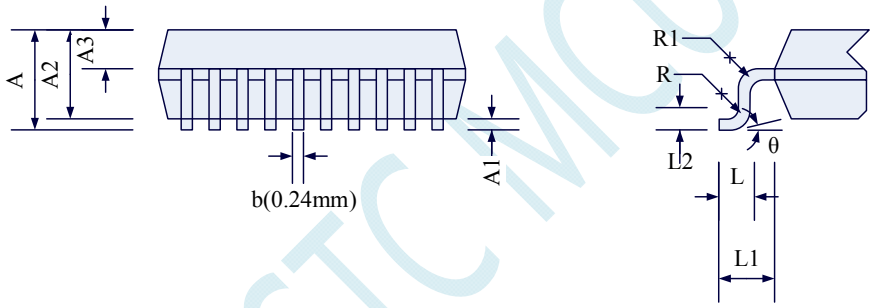

STC MCU

4.9 SOP16 package mechanical data

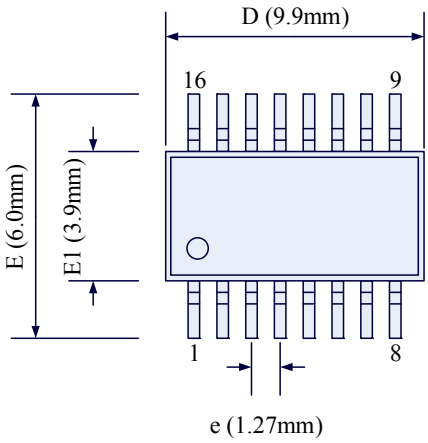

general size			
units of measurement：mm			
SYMBOL	MIN	TYP	MAX
A	1.35	1.60	1.75
A1	0.10	0.15	0.25
A2	1.25	1.45	1.65
A3	0.55	0.65	0.75
b	0.35	0.40	0.45
D	9.80	9.90	10.00
E	5.80	6.00	6.20
E1	3.80	3.90	4.00
e	1.27BSC		
L	0.45	0.60	0.80
L1	1.04REF		
L2	0.25BSC		
R1	0.07	-	-
R2	0.07	-	-

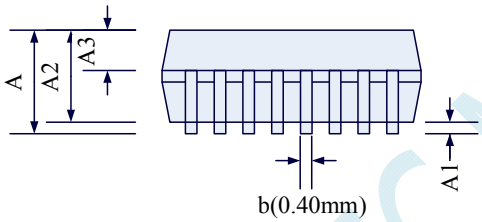

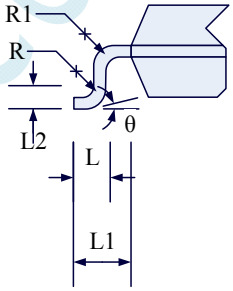

STCMCU

5 STC8 seriesmicrocontroller selection price list

Type	Working Voltage(V)		Flash program memory 10 million times byte	Mass extension SRAM byte	Powerful dual DPTR	EEPROM 10 million times byte	I/O port maximum number	Serial port waking up power-down	SPI	I²C	Timer/counter(T0-T4 external pins evoked)	16 bit advanced PWM timer complementary symmetric dead zone	15 bit enhanced PWM(with dead zone control)	PCA/CCP/PWM(external interruption and power-down evoked)	Power down wake-up timer	15 road high speed ADC(8 road PWM can be used as 8 road D/A)	Comparator(can be used as A/D and power down detection)	Internal low voltage detection interruption and power down evoked	Watch dog reset timer	Internal reliable(optional reset threshold voltage)	Internal precise clock(24MHz adjusting)	Output clock and reset	Transmission after program encryption(anti-interception)	Setting next update program password	Support RS485 download	Support USB directly download	Online simulation	Encapsulation										2017 new goods supply information
																												LQFP64S	QFN64 <8x8mm>	LQFP48	QFN48 <6x6mm>	LQFP44	LQFP32	QFN32 <4x4mm>	TSSOP20	SOP16	SOP8	PDIP40	
STC8F2K08S2	2.0-5.5		8K	2K	2	4K	18	2	Y	Y	5	-	-	-	Y	-	Y	Y	Y	4	Y	Y	Y	Y	Y	Y	Y								¥1.2	1.15			Large supply
STC8F2K16S2	2.0-5.5		16K	2K	2	4K	42	2	Y	Y	5	-	-	-	Y	-	Y	Y	Y	4	Y	Y	Y	Y	Y	Y	Y					¥1.8	¥1.6	1.65	¥1.4	1.35			
STC8F2K32S2	2.0-5.5		32K	2K	2	32K	42	2	Y	Y	5	-	-	-	Y	-	Y	Y	Y	4	Y	Y	Y	Y	Y	Y	Y					1.99	¥1.8	1.85					
STC8F2K60S2	2.0-5.5		60K	2K	2	4K	42	2	Y	Y	5	-	-	-	Y	-	Y	Y	Y	4	Y	Y	Y	Y	Y	Y	Y					¥2.2	¥2.0						
STC8F2K64S2	2.0-5.5		64K	2K	2	IAP	42	2	Y	Y	5	-	-	-	Y	-	Y	Y	Y	4	Y	Y	Y	Y	Y	Y	Y					¥2.2	¥2.0						
STC8F2K16S4	2.0-5.5		16K	2K	2	48K	42	4	Y	Y	5	-	-	-	Y	-	Y	Y	Y	4	Y	Y	Y	Y	Y	Y	Y					¥2.7	¥2.6						Large supply
STC8F2K32S4	2.0-5.5		32K	2K	2	32K	42	4	Y	Y	5	-	-	-	Y	-	Y	Y	Y	4	Y	Y	Y	Y	Y	Y	Y					¥2.8	¥2.7						
STC8F2K60S4	2.0-5.5		60K	2K	2	4K	42	4	Y	Y	5	-	-	-	Y	-	Y	Y	Y	4	Y	Y	Y	Y	Y	Y	Y					¥2.9	¥2.8						
STC8F2K64S4	2.0-5.5		64K	2K	2	IAP	42	4	Y	Y	5	-	-	-	Y	-	Y	Y	Y	4	Y	Y	Y	Y	Y	Y	Y					¥2.9	¥2.8						
STC8A4K16S2A12	2.0-5.5		16K	4K	2	48K	59	2	Y	Y	5	-	8	4	Y	12bit	Y	Y	Y	4	Y	Y	Y	Y	Y	Y	Y	¥3.1		¥2.9		¥2.9							Large supply
STC8A4K32S2A12	2.0-5.5		32K	4K	2	32K	59	2	Y	Y	5	-	8	4	Y	12bit	Y	Y	Y	4	Y	Y	Y	Y	Y	Y	Y	¥3.3		¥3.0		¥3.0							
STC8A4K60S2A12	2.0-5.5		60K	4K	2	4K	59	2	Y	Y	5	-	8	4	Y	12bit	Y	Y	Y	4	Y	Y	Y	Y	Y	Y	Y	¥3.6		¥3.2		¥3.2							
STC8A4K64S2A12	2.0-5.5		64K	4K	2	IAP	59	2	Y	Y	5	-	8	4	Y	bit	Y	Y	Y	4	Y	Y	Y	Y	Y	Y	Y	¥3.6		¥3.2		¥3.2							
STC8A8K16S4A12	2.0-5.5		16K	8K	2	48K	59	4	Y	Y	5	-	8	4	Y	12bit	Y	Y	Y	4	Y	Y	Y	Y	Y	Y	Y	¥3.4		¥3.2		¥3.2							Large supply
STC8A8K32S4A12	2.0-5.5		32K	8K	2	32K	59	4	Y	Y	5	-	8	4	Y	12bit	Y	Y	Y	4	Y	Y	Y	Y	Y	Y	Y	¥3.6		¥3.3		¥3.3							
STC8A8K60S4A12	2.0-5.5		60K	8K	2	4K	59	4	Y	Y	5	-	8	4	Y	12bit	Y	Y	Y	4	Y	Y	Y	Y	Y	Y	Y	¥3.8		¥3.4		¥3.4							
STC8A8K64S4A12	2.0-5.5		64K	8K	2	IAP	59	4	Y	Y	5	-	8	4	Y	12bit	Y	Y	Y	4	Y	Y	Y	Y	Y	Y	Y	¥3.8		¥3.4		¥3.4							
STC8H1K64S2A10	1.7-5.5		64K	1K	2	IAP	45	2	Y	Y	4	4	-	-	Y	10bit	Y	Y	Y	4	Y	Y	Y	Y	Y	Y	Y			¥2.3			¥2.1						Sample delivery in january
STC8H1K32S2A10	1.7-5.5		32K	1K	2	1K	45	2	Y	Y	4	4	-	-	Y	10bit	Y	Y	Y	4	Y	Y	Y	Y	Y	Y	Y			¥1.9			¥1.6						
STC8H1K16S2A10	1.7-5.5		16K	1K	2	9K	45	2	Y	Y	4	4	-	-	Y	10bit	Y	Y	Y	4	Y	Y	Y	Y	Y	Y	Y			¥1.7			¥1.4						
STC8H1K08S2A10	1.7-5.5		8K	1K	2	3K	17	2	Y	Y	3	4	-	-	Y	10bit	Y	Y	Y	4	Y	Y	Y	Y	Y	Y	Y								¥1.1	1.05			Sample delivery in january
STC8H1K08S2	1.7-5.5		8K	1K	2	3K	18	2	Y	Y	3	-	-	-	Y		Y	Y	Y	4	Y	Y	Y	Y	Y	Y	Y								0.95	¥0.9			
STC8H04A10	1.7-5.5		4K	256	1	3K	6	1	Y	Y	3	-	-	-	Y	10bit	Y	Y	Y	4	Y	Y	Y	Y	Y	Y	Y										¥0.7		
STC8H04	1.7-5.5		4K	256	1	3K	6	1	Y	Y	3	-	-	-	Y		Y	Y	Y	4	Y	Y	Y	Y	Y	Y	Y										¥0.6		

5.1 STC8 series of microcontroller package price list

Type	some encapsulation price(RMB ¥) LQFP64S QFN64 <8mmx8mm> LQFP48 QFN48 <6mmx6mm> LQFP44 LQFP32 QFN32 <4mmx4mm> TSSOP20 SOP16 SOP8 DFN8											2017 new goods supply information
	LQFP64S	QFN64	LQFP48	QFN48	LQFP44	LQFP32	QFN32	TSSOP20	SOP16	SOP8	PDIP40	
STC8F2K08S2								¥1.2	¥1.15			Large supply
STC8F2K16S2					¥1.8	¥1.6	¥1.65	¥1.4	¥1.35			
STC8F2K32S2					1.99	¥1.8	¥1.85					
STC8F2K60S2					¥2.2	¥2.0						
STC8F2K64S2					¥2.2	¥2.0						
STC8F2K16S4					¥2.7	¥2.6						Large supply
STC8F2K32S4					¥2.8	¥2.7						
STC8F2K60S4					¥2.9	¥2.8						
STC8F2K64S4					¥2.9	¥2.8						
STC8A4K16S2A12	¥3.1		¥2.9		¥2.9							Large supply
STC8A4K32S2A12	¥3.3		¥3.0		¥3.0							
STC8A4K60S2A12	¥3.6		¥3.2		¥3.2							
STC8A4K64S2A12	¥3.6		¥3.2		¥3.2							
STC8A8K16S4A12	¥3.4		¥3.2		¥3.2							Large supply
STC8A8K32S4A12	¥3.6		¥3.3		¥3.3							
STC8A8K60S4A12	¥3.8		¥3.4		¥3.4							
STC8A8K64S4A12	¥3.8		¥3.4		¥3.4							
STC8H1K32S2			¥2.3			¥2.1						Sampl delivery in january
STC8H1K32S2			¥1.9			¥1.6						
STC8H1K16S2			¥1.7			¥1.4						
STC8H1K08S2A10								¥1.1	¥1.05			Sampl delivery in january
STC8H1K08S2								¥0.95	¥0.9			
STC8H04A10										¥0.7		
STC8H04										¥0.6		

5.2 STC8 series microcontroller name rule

STC 8x xK 64 Sx Ax

- Ax — ADC accuracy
  - A12：12bits ADC
  - A10：10bits ADC
- Sx — Number of independent serial ports
  - S4：4 Independent serial port
  - S2：2 Independent serial port
  - S ：1 Independent serial port
- 64 — Program space size
  - 64：64K bytes
  - 32：32K bytes
  - 16：16K bytes
- xK — SRAM space size
  - 8K：8K bytes
  - 2K：2K bytes
- 8x — Sub - series
  - 8F：STC8F series（without AVcc、AGnd、AVRef pins）
  - 8A：STC8A series（with AVcc、AGnd、AVRef pins）
  - 8H：STC8H seires

STC MCU

6 ISP download and typical application circuit diagram

6.1 STC8F series ISP download application circuit diagram

6.1.1 Using RS-232 transferor download

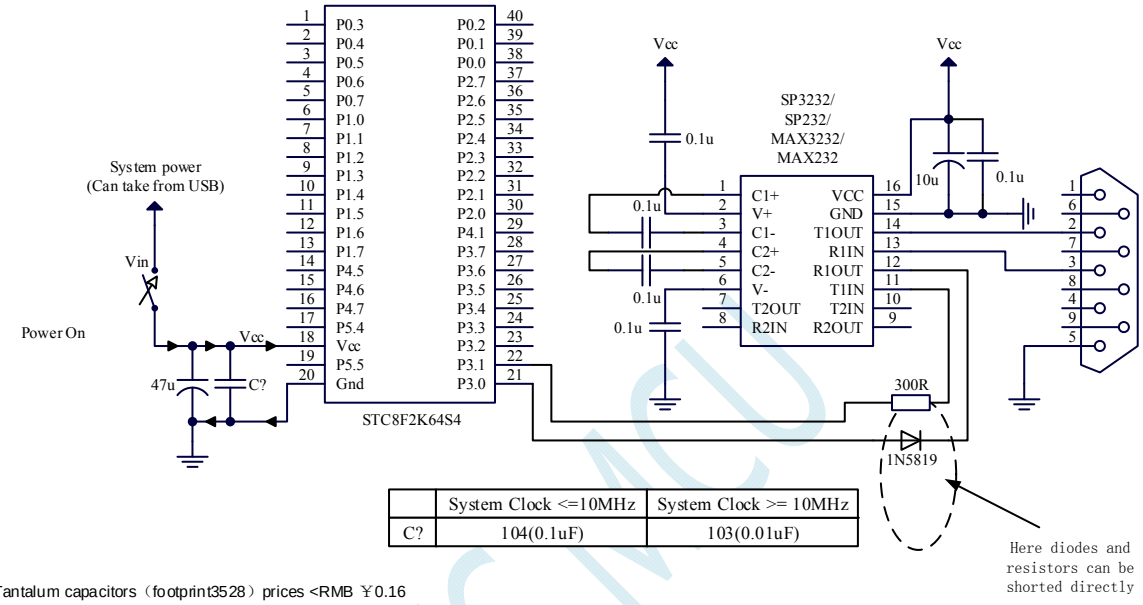

	System Clock <=10MHz	System Clock >= 10MHz
C?	104(0.1uF)	103(0.01uF)

47u Tantalum capacitors（footprint3528）prices <RMB ￥0.16
22U Monolithic capacitors（footprint 0603）prices <RMB ￥0.038
10U Monolithic capacitors（footprint 0603）prices <RMB ￥0.028
0.1U Monolithic capacitors（footprint 0603）prices<RMB ￥0.005

6.1.2 Using PL2303-SA download

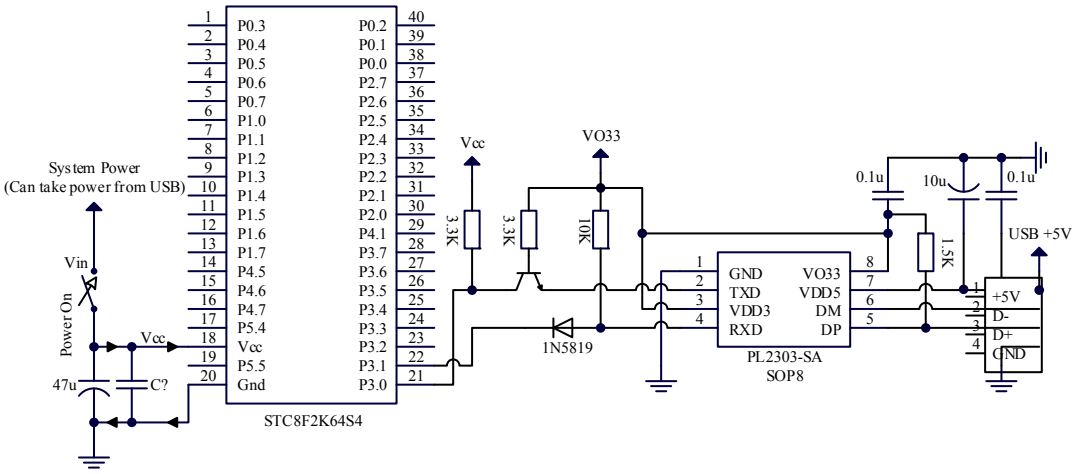

47u Tantalum capacitors（footprint 3528）prices<RMB ￥0.16
22U Monolithic capacitors（footprint 0603）prices<RMB ￥0.038
10U Monolithic capacitors（footprint 0603）prices<RMB ￥0.028
0.1U Monolithic（footprint 0603）prices<RMB ￥0.005

	System clock <=10MHz	System clock>10MHz
C?	104(0.1uF)	103(0.01uF)

6.1.3 Using U8-Mini tool download

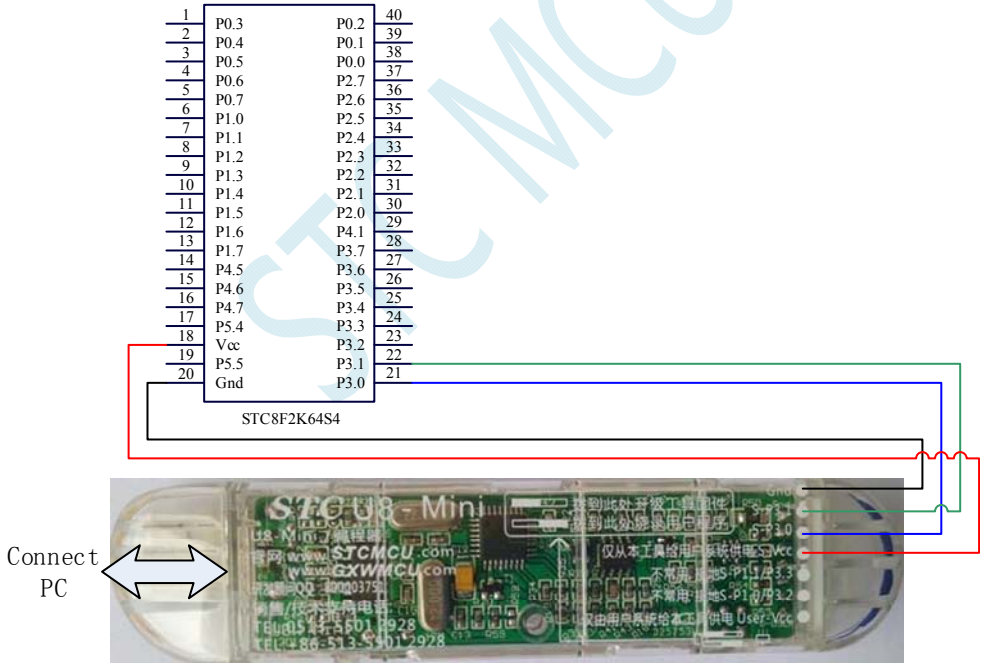

6.1.4 Using U8W tool download

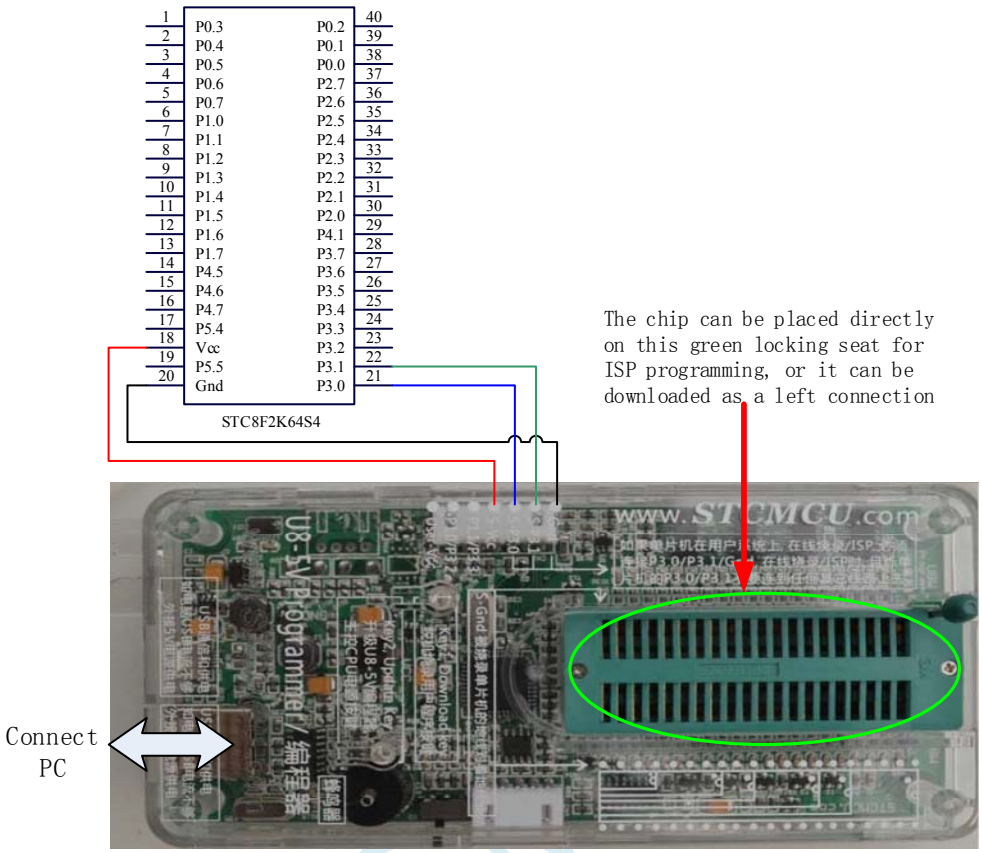

6.1.5 USB directly ISP download

Notice：you need to connect p3.2 to GND to download it normally when you use it with usb

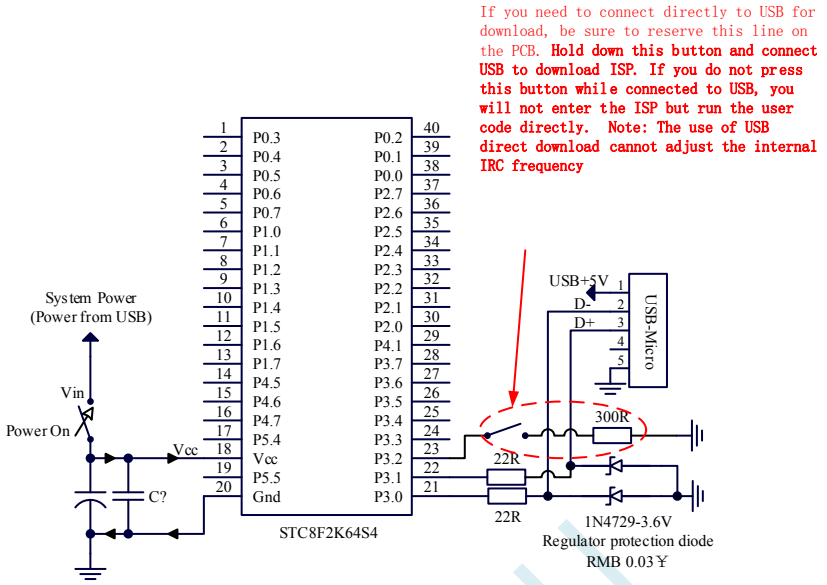

47u Tantalum capacitors（footprint 3528）prices<RMB ￥0.16
22U Monolithic capacitors（footprint 0603）prices<RMB ￥0.038
10U Monolithic capacitors（footprint 0603）prices<RMB ￥0.028
0.1U Monolithic（footprint 0603）prices<RMB ￥0.005

	System clock <=10MHz	System clock>10MHz
C?	104(0.1uF)	103(0.01uF)

6.2 STC8A series ISP download application circuit diagram

6.2.1 Using RS-232 transfer download(using high-precision ADC)

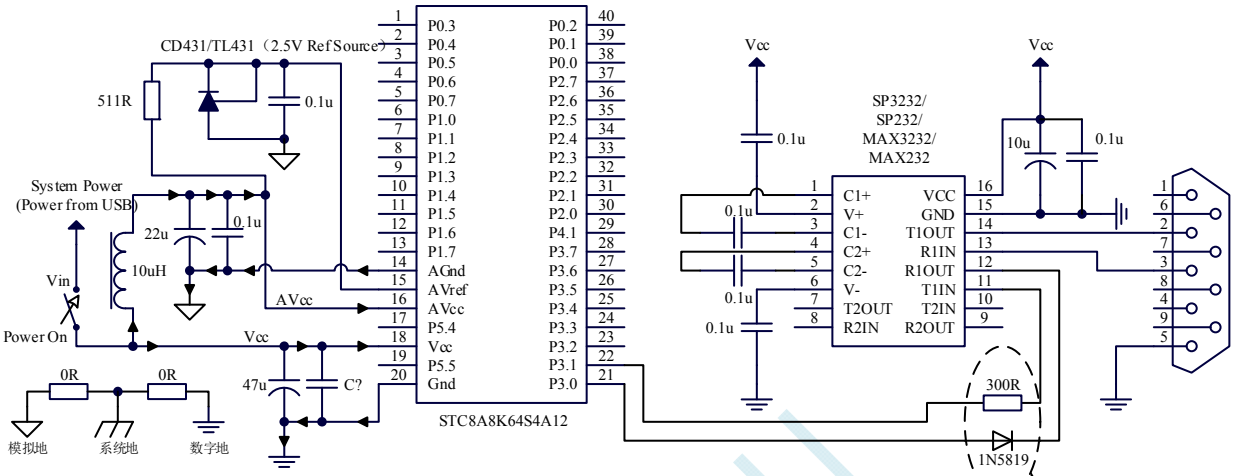

47u Tantalum capacitors（footprint 3528）prices<RMB ￥0.16
22U Monolithic capacitors（footprint 0603）prices<RMB ￥0.038
10U Monolithic capacitors（footprint 0603）prices<RMB ￥0.028
0.1U Monolithic（footprint 0603）prices<RMB ￥0.005

	System clock <=10MHz	System clock>10MHz
C?	104(0.1uF)	103(0.01uF)

6.2.2 Using RS-232 transfer download (ADC general application)

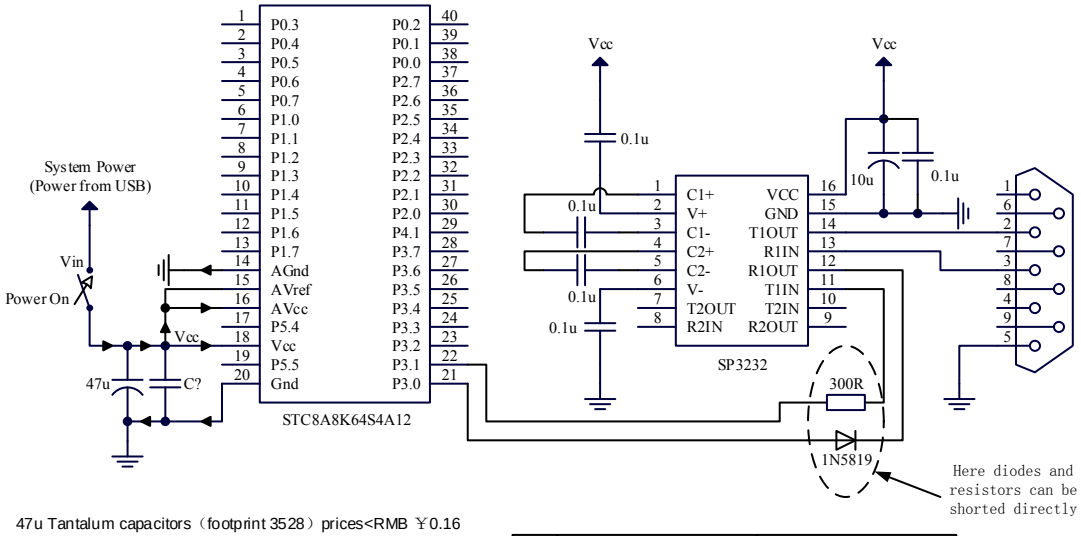

47u Tantalum capacitors（footprint 3528）prices<RMB ￥0.16
22U Monolithic capacitors（footprint 0603）prices<RMB ￥0.038
10U Monolithic capacitors（footprint 0603）prices<RMB ￥0.028
0.1U Monolithic（footprint 0603）prices<RMB ￥0.005

	System clock <=10MHz	System clock>10MHz
C?	104(0.1uF)	103(0.01uF)

STC MCU

6.2.3 Using PL2303 download

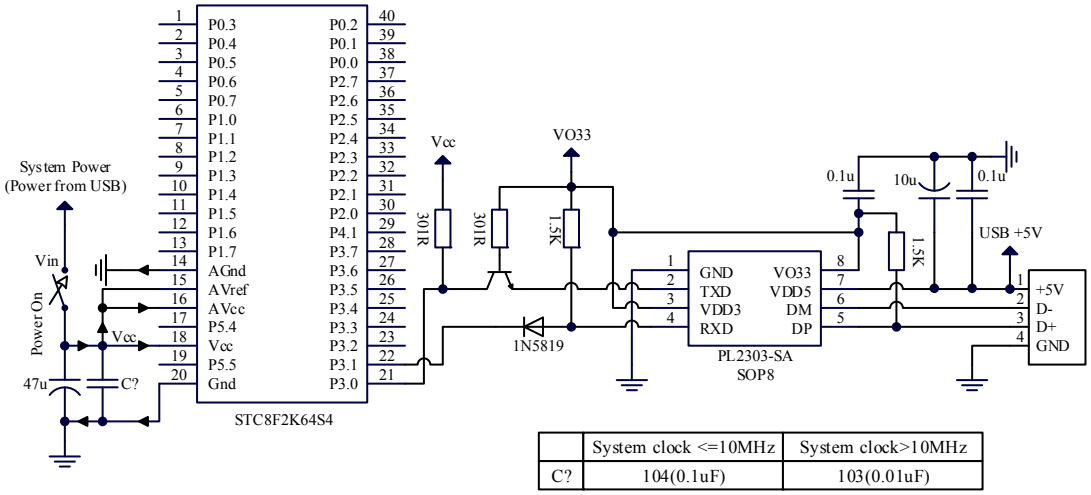

	System clock <=10MHz	System clock>10MHz
C?	104(0.1uF)	103(0.01uF)

47u Tantalum capacitors（footprint 3528）prices<RMB ￥0.16
22U Monolithic capacitors（footprint 0603）prices<RMB ￥0.038
10U Monolithic capacitors（footprint 0603）prices<RMB ￥0.028
0.1U Monolithic（footprint 0603）prices<RMB ￥0.005

STC MCU

6.2.4 Using U8-Mini tool download

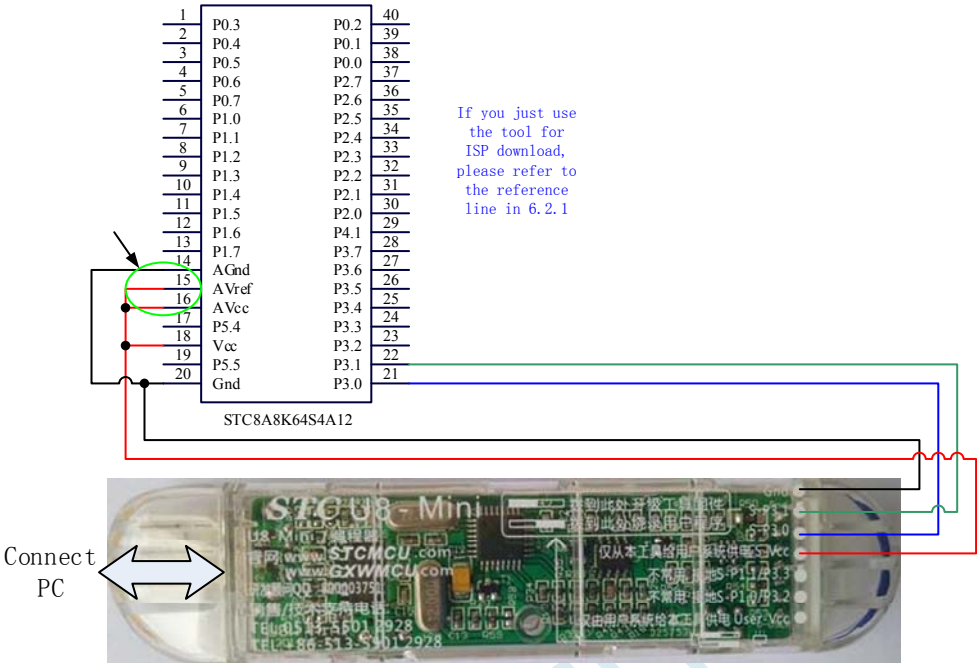

6.2.5 Using U8W tool download

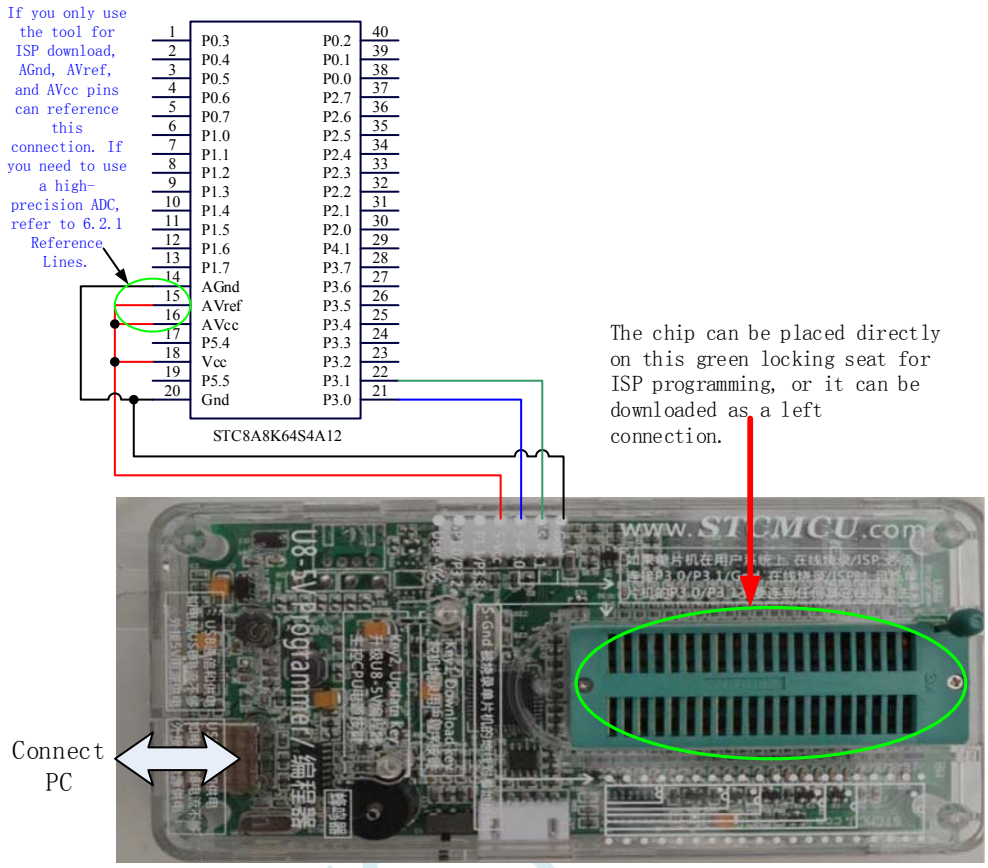

6.2.6 USB directly ISP download

Notice：you need to connect p3.2 to GND to download it normally when you use it with usb

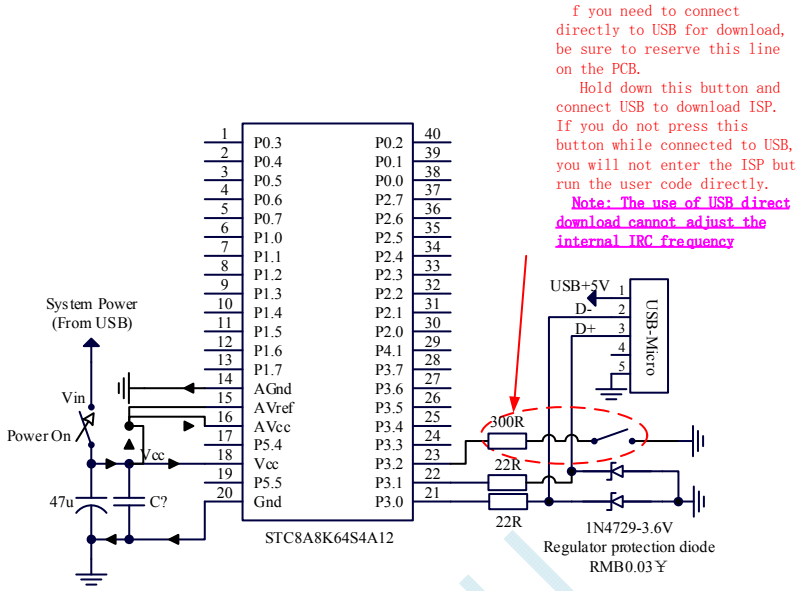

47u Tantalum capacitors（footprint 3528）prices<RMB ￥0.16
22U Monolithic capacitors（footprint 0603）prices<RMB ￥0.038
10U Monolithic capacitors（footprint 0603）prices<RMB ￥0.028
0.1U Monolithic（footprint 0603）prices<RMB ￥0.005

	System clock <=10MHz	System clock>10MHz
C?	104(0.1uF)	103(0.01uF)

7 Clock、Reset and Power management

7.1 System clock control

The system clock controller provides a clock source for the CPU of the single chip microcomputer and all peripheral systems. The system clock has three clock sources to choose from: an internal high-precision IRC of 24 MHz, an internal IRC of 32 k Hz (large error), an external crystal oscillator, or an external clock signal. Each clock source can be individually enabled and turned off by a program, and clock division is internally provided to achieve the purpose of reducing power consumption.

When the microcontroller enters power-down mode, the clock controller will shut down all clock sources.

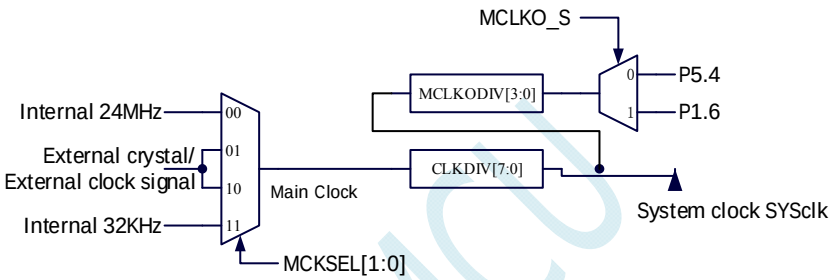

System Clock Structure

Correlation register

Symbol	Description	addr	Bit addr and symbol								Res value
			B7	B6	B5	B4	B3	B2	B1	B0	
CKSEL	Clock selection register	FE00H	MCLKODIV[3:0]				MCLKO_S	-	MCKSEL[1:0]		0000,0000
CLKDIV	Clock frequency division register	FE01H									0000,0100
IRC24MCR	Internal 24M oscillator control register	FE02H	ENIRC24M	-	-	-	-	-	-	IRC24MST	1xxx,xxx0
XOSCCR	External oscillator control register	FE03H	ENXOSC	XITYPE	-	-	-	-	-	XOSCST	00xx,xxx0
IRC32KCR	Internal 32K oscillator control register	FE04H	ENIRC32K	-	-	-	-	-	-	IRC32KST	0xxx,xxx0

CKSEL(System clock select register)

Symbol	address	B7	B6	B5	B4	B3	B2	B1	B0
CKSEL	FE00H	MCLKODIV[3:0]				MCLKO_S	MCKSEL[1:0]		

MCLKODIV[3:0]：Frequency division coefficient of system clock output

(**Note: the clock source for the system clock division output is the system clock after the main clock MCLK is divided by CLKDIV**)

MCLKODIV[3:0]	System clock frequency divider frequency

0000	No output
0001	SYSClk/1
001x	SYSClk /2
010x	SYSClk /4
011x	SYSClk /8
100x	SYSClk /16
101x	SYSClk /32
110x	SYSClk /64
111x	SYSClk /128

MCLKO_S：System clock output pin selection

0：System clock frequency division output to P5.4

1：System clock frequency division output to P1.6

MCKSEL[1:0]：Main clock source selection

MCKSEL[1:0]	Main clock source
00	Internal 24MHz high precision IRC
01	External crystal oscillator or External input clock signal
10	
11	Internal 32KHz low speed IRC

CLKDIV(Clock divider register)

Symbol	address	B7	B6	B5	B4	B3	B2	B1	B0
CLKDIV	FE01H								

CLKDIV：Main clock division factor. The system clock SYSLK is a clock signal obtained by dividing the main clock MCLK.

CLKDIV	System clock frequency
0	MCLK/1
1	MCLK/1
2	MCLK/2
3	MCLK/3
…	…
x	MCLK/x
…	…
255	MCLK/255

IRC24MCR(Internal 24m high precision IRC control register)

Symbol	address	B7	B6	B5	B4	B3	B2	B1	B0
IRC24MCR	FE02H	ENIRC24M	-	-	-	-	-	-	IRC24MST

ENIRC24M：Internal 24m high precision IRC enable bit

0: close the internal 24m high precision IRC

1: enable internal 24m high precision IRC

IRC 24 MST: internal 24m high precision IRC frequency stability flag bit. (read - only bit)

When the internal 24m IRC is enabled from the stop state, it must be some time before the oscillator frequency can be stabilized. when the oscillator frequency is stabilized, the clock controller will automatically set IRC 24 MST flag position 1. So when the user program needs to switch the clock to IRC using the internal 24m, must first set the en IRC 24 m = 1 enable oscillator, and then always query the oscillator stability flag IRC 24 MST, until the flag bit becomes 1, to switch the clock source.

XOSCCR(External oscillator control register)

Symbol	address	B7	B6	B5	B4	B3	B2	B1	B0
XOSCCR	FE03H	ENXOSC	XITYPE	-	-	-	-	-	XOSCST

ENXOSC：External crystal oscillator enable bit

0: turn off the external crystal oscillator

1: enable external crystal oscillator

Xi type: external clock source type

0: the external clock source is an external clock signal (or active crystal oscillator). The signal source only needs to be connected to XTALI (p 1.7) of the single chip microcomputer

1: the external clock source is a crystal oscillator. The signal source is connected with XTALI (p 1.7) and XTALO (p 1.6) of the singlechip

XOS CST: external crystal oscillator frequency stability flag bit. (read - only bit)

When the external crystal oscillator is enabled from the stop state, it must take a period of time for the oscillator frequency to stabilize. when the oscillator frequency stabilizes, the clock controller will automatically set XOSCST flag position 1. So when the user program needs to switch the clock to use the external crystal oscillator, must first set ENSOSC = 1 enable oscillator, and then always query the oscillator stability flag XOSCST, until the flag bit becomes 1, to switch the clock source.

IRC32KCR(Internal 32k Hz low speed IRC control register)

Symbol	address	B7	B6	B5	B4	B3	B2	B1	B0
IRC32KCR	FE04H	ENIRC32K	-	-	-	-	-	-	IRC32KST

En IRC 32k: internal 32k low speed IRC enable bit

0: turn off the internal 32k low speed IRC

1: enable internal 32k low speed IRC

Irc 32k ST: internal 32k low speed IRC frequency stability flag bit. (read - only bit)

When the internal 32k low-speed IRC is enabled from the stop state, it must take a period of time for the oscillator frequency to stabilize. when the oscillator frequency stabilizes, the clock controller will automatically mark the IRC 32k ST position 1. So when the user program needs to switch the clock to use the internal 32 k low speed IRC, must first set the en IRC 32k = 1 enable oscillator, and then always query the oscillator stability flag IRC 32k ST, until the flag bit becomes 1, to switch the clock source.

7.2 System reset

The reset of STC8 series singlechip is divided into two kinds: hardware reset and software reset.

- When the hardware is reset, the values of all registers are reset to the initial values, and all hardware options are re-read.At the same time according to the hardware options set by the power-on wait time

to power up wait.Hardware reset mainly includes:

- Power-on reset
- Low pressure reset
- Reduction of foot
- Watchdog reset

When the software is reset, the value of all the registers will be reset to the initial value except for the register associated with the clock, and the software reset will not re-read all the hardware options.Software reset mainly includes:

The reset triggered by writing IAP_CONTR 's SWRST

Correlation register

Symbol	description	address	Bit address and symbol								reset value
			B7	B6	B5	B4	B3	B2	B1	B0	
WDT_CONTR	Watchdog control register	C1H	WDT_FLAG	-	EN_WDT	CLR_WDT	IDL_WDT	WDT_PS[2:0]			0x00,0000
IAP_CONTR	IAP control register	C7H	IAPEN	SWBS	SWRST	CMD_FAIL	-	IAP_WT[2:0]			0000,x000
RSTCFG	Reset configuration register	FFH	-Watchdog control register	ENLVR	-	P54RST	-	-	LVDS[1:0]		0000,0000

WDT_CONTR(Watchdog control register)

Symbol	address	B7	B6	B5	B4	B3	B2	B1	B0
WDT_CONTR	C1H	WDT_FLAG	-	EN_WDT	CLR_WDT	IDL_WDT	WDT_PS[2:0]		

WDTFLAG: watchdog overflow sign
Watchdog overflow occurs, the hardware automatically will this position 1, the need for software clearance.
ENWD: watchdog enable
0: no effect on single Chip Microcomputer
1: start watchdog timer
CLRWDTT: watchdog timer zero
0: no effect on single Chip Microcomputer
1 : Clear watchdog timer and reset this bit automatically
Watchdog control bit in IDL_WDT:IDLE mode
Watchdog stop counting in 0:IDLE mode
Watchdog continues counting when in 1:IDLE mode
WDT_PS [2:0]: watchdog timer clock frequency division coefficient WDTFLAG: watchdog overflow sign
Watchdog overflow occurs, the hardware automatically will this position 1, the need for software clearance.
Enwd: watchdog enable
0: no effect on single Chip Microcomputer
1: start watchdog timer
CLRWDTT: watchdog timer zero
0: no effect on single Chip Microcomputer
1 : Clear watchdog timer and reset this bit automatically
Watchdog control bit in IDL_WDT:IDLE mode

Watchdog stop counting in 0:IDLE mode

Watchdog continues counting when in 1:IDLE mode

WDT_PS [2:0]: watchdog timer clock frequency division coefficient

WDT_PS[2:0]	division factor	The overflow time of 12M in the main frequency	The overflow time of 20M in the main frequency
000	2	≈ 65.5 MS	≈ 39.3 MS
001	4	≈ 131 MS	≈ 78.6 MS
010	8	≈ 262 MS	≈ 157 MS
011	16	≈ 524 MS	≈ 315 MS
100	32	≈ 1.05 S	≈ 629 MS
101	64	≈ 2.10 S	≈ 1.26 S
110	128	≈ 4.20 S	≈ 2.52 S
111	256	≈ 8.39 S	≈ 5.03 S

The formula for calculating the overflow time of the watchdog is as follows:

$$\text{Overflow time of watchdog timer} = \frac{12 \times 32768 \times 2^{(WDT_PS+1)}}{SYSclk}$$

IAP_CONTR(IAP control register)

Symbol	address	B7	B6	B5	B4	B3	B2	B1	B0
IAP_CONTR	C7H	IAPEN	SWBS	SWRST	CMD_FAIL	-	IAP_CMD[2:0]		

SWBS: software reset startup selection

0: after the software is reset, execute the code from the user program area.The data in the user data area remains the same.

1: after the software reset, the code is executed from the system ISP area.The data in the user data area is initialized.

SWRST：he formula for calculating the spillover time of the watchdog is as followsThe formula for calculating the spillover time of the watchdog is as followsThe formula for calculating the spillover time of the watchdog is as follows

0：No effect on single Chip Microcomputer

1：Trigger software reset

RSTCFG(Reset configuration register)

Symbol	address	B7	B6	B5	B4	B3	B2	B1	B0
RSTCFG	FFH	-	ENLVR	-	P54RST	-	-	LVDS[1:0]	

ENLVR：Low voltage reset control bit

0: low-voltage reset is prohibited.Low voltage interruptions occur when the system detects a low voltage event

1: enable low pressure reset.Automatic reset when a low voltage event is detected by the system

RST:Pin function selection

SWBS: software reset startup selection

0: after the software is reset, execute the code from the user program area.The data in the user data area remains the same.

1: after the software reset, the code is executed from the system ISP area.The data in the user data area is initialized.

0：RST Pin used as ordinary I / O port(P54)

1：RST Pin used as reset pin

LVDS[1:0]：Low voltage detection threshold voltage setting

LVDS[1:0]	Threshold voltage of low voltage detection
00	2.2V
01	2.4V
10	2.7V
11	3.0V

7.3 System power management

Symbol	description	address	Bit address and symbol								reset value
			B7	B6	B5	B4	B3	B2	B1	B0	
PCON	Power Control Register	87H	SMOD	SMOD0	LVDF	POF	GF1	GF0	PD	IDL	0011,0000
VOCTRL	Voltage control register	BBH	SCC	-	-	-	-	-	0	0	0xxx,xx00

PCON(power control register)

Symbol	address	B7	B6	B5	B4	B3	B2	B1	B0
PCON	87H	SMOD	SMOD0	LVDF	POF	GF1	GF0	PD	IDL

LVDF：Low-voltage detection mark.When the system detects the low voltage event, the hardware automatically takes this position 1 and requests the CPU interrupt.This bit requires user software clearance.

POF：Power on mark bit.When the hardware automatically places this position 1.

PD：Power-down mode control bit

0：No effect

1：Single-chip microcomputer into power-off mode CPU and all peripherals are stopped working.The hardware is automatically cleared after wake-up.

(External pins that wake CPU from power off mode include：INT0/P3.2、INT1/P3.3、INT2/P3.6、INT3/P3.7、INT4/P3.0、T0/P3.4、T1/P3.5、T2/P1.2、T3/P0.4、T4/P0.6、CCP0/P1.7、CCP1/P1.6、CCP2/P1.5 、 CCP4/P1.4 、 CCP0_2/P2.3 、 CCP1_2/P2.4 、 CCP2_2/P2.5 、 CCP3_2/P2.6 、CCP0_3/P7.0、CCP1_3/P7.1、CCP2_3/P7.2、CCP3_3/P7.3、CCP0_4/P3.3、CCP1_4/P3.2、CCP2_4/P3.1、CCP3_4/P3.0、RxD/P3.0、RxD_2/P3.6、RxD_3/P1.6、RxD_4/P4.3、RxD2/P1.0、RxD2_2/P4.0、RxD3/P0.0、RxD3_2/P5.0、RxD4/P0.2、RxD4_2/P5.2，There are also power - down wake - up timers , low - voltage interrupts , and comparator interrupts that also wake the CPU from power - down mode .)

IDL：IDLE(idle)Mode control bit

0：No effect

1：Microcontroller enters IDLE mode, other peripherals are still running,when CPU stops working.Automatic hardware clearance after wake-up

VOCTRL(Voltage control register)

Symbol	address	B7	B6	B5	B4	B3	B2	B1	B0
VOCTRL	BBH	SCC						0	0

SCC：Static current control bit

0：The static current control circuit is selected for static current control, and the static current is about 1.5uA.

1：Select the external static holding current control circuit, select this mode when the lower power consumption. The static current under the mode of STC8A8K series is generally less than 0.15uA; the static current of STC8F2K series is generally below 0.1uA. Note: this mode in power down mode, the VCC pin voltage can have greater volatility, or on MCU the kernel may have adverse effects.

[B1:B0]：Internal test bit, it must be written to 0

7.4 Sample program

7.4.1 Select system clock source

Assembly code

```
P_SW2       DATA    0BAH
CKSEL       EQU     0FE00H
CLKDIV      EQU     0FE01H
IRC24MCR    EQU     0FE02H
XOSCCR      EQU     0FE03H
IRC32KCR    EQU     0FE04H

            ORG     0000H
            LJMP    MAIN

            ORG     0100H
MAIN:
            MOV     SP,#3FH

            MOV     P_SW2,#80H
            MOV     A,#00H              ; Select the internal IRC (default)
            MOV     DPTR,#CKSEL
            MOVX    @DPTR,A
            MOV     P_SW2,#00H

;           MOV     P_SW2,#80H
;           MOV     A,#0C0H             ; Start the external oscillator
;           MOV     DPTR,#XOSCCR
;           MOVX    @DPTR,A
;           MOVX    A,@DPTR
;           JNB     ACC.0,$-1           ; Waiting for the stability of the clock
;           CLR     A                   ; Clock without frequency division
;           MOV     DPTR,#CLKDIV
            MOVX    @DPTR,A
```

```
;           MOV     A,#01H          ; Selection of external oscillator
;           MOV     DPTR,#CKSEL
;           MOVX    @DPTR,A
;           MOV     P_SW2,#00H

;           MOV     P_SW2,#80H
;           MOV     A,#80H          ; Start the internal 32K IRC
;           MOV     DPTR,#IRC32KCR
;           MOVX    @DPTR,A
;           MOVX    A,@DPTR
;           JNB     ACC.0,$-1       ; Waiting for the stability of the clock
;           CLR     A               ; Clock without frequency division
;           MOV     DPTR,#CLKDIV
;           MOVX    @DPTR,A
;           MOV     A,#03H          ; Select the internal 32K
;           MOV     DPTR,#CKSEL
;           MOVX    @DPTR,A
;           MOV     P_SW2,#00H

            JMP     $

    END
```

C code

```
#include "reg51.h"
#include "intrins.h"

#define     CKSEL       (*(unsigned char volatile xdata *)0xfe00)
#define     CLKDIV      (*(unsigned char volatile xdata *)0xfe01)
#define     IRC24MCR    (*(unsigned char volatile xdata *)0xfe02)
#define     XOSCCR      (*(unsigned char volatile xdata *)0xfe03)
#define     IRC32KCR    (*(unsigned char volatile xdata *)0xfe04)

sfr         P_SW2       =   0xba;

void main()
{
    P_SW2 = 0x80;
    CKSEL = 0x00;               // Select the internal IRC (default)
    P_SW2 = 0x00;

/*
    P_SW2 = 0x80;
    XOSCCR = 0xc0;              // Start the external oscillator
    while (!(XOSCCR & 1));      // Waiting for the stability of the clock
    CLKDIV = 0x00;              // Clock without frequency division
    CKSEL = 0x01;               // Selection of external oscillator
    P_SW2 = 0x00;
*/

/*
    P_SW2 = 0x80;
    IRC32KCR = 0x80;            // Start the internal 32K IRC
    while (!(IRC32KCR & 1));    // Waiting for the stability of the clock
    CLKDIV = 0x00;              // Clock without frequency division
```

```
    CKSEL = 0x03;                    // Select the internal 32K
    P_SW2 = 0x00;
*/
    while (1);
}
```

7.4.2 Master clock frequency division output

Assembly code

```
P_SW2       DATA    0BAH
CKSEL       EQU     0FE00H
CLKDIV      EQU     0FE01H

            ORG     0000H
            LJMP    MAIN

            ORG     0100H
MAIN:
            MOV     SP,#3FH

            MOV     P_SW2,#80H
;           MOV     A,#10H              ; The master clock output to the P5.4 port
;           MOV     A,#20H              ; The 2 frequency division output of the master clock to the P5.4 port
            MOV     A,#40H              ; The 4 frequency division output of the master clock to the P5.4 port
            MOV     A,#48H              ; The 4 frequency division output of the master clock to the P1.6 por
            MOV     DPTR,#CKSEL
            MOVX    @DPTR,A
            MOV     P_SW2,#00H

            JMP     $

    END
```

C code

```
#include "reg51.h"
#include "intrins.h"

#define   CKSEL     (*(unsigned char volatile xdata *)0xfe00)
#define   CLKDIV    (*(unsigned char volatile xdata *)0xfe01)

sfr       P_SW2     =   0xba;

void main()
{
    P_SW2 = 0x80;
//  CKSEL = 0x10;                   // The master clock output to the P5.4 port
//  CKSEL = 0x20;                   // The 2 frequency division output of the master clock to the P5.4 port

    CKSEL = 0x40;                   // The 4 frequency division output of the master clock to the P5.4 port
//  CKSEL = 0x48;                   // The 4 frequency division output of the master clock to the P1.6 port
    P_SW2 = 0x00;

    while (1);
}
```

7.4.3 Watchdog timer application

Assembly code

```
; The test frequency is 11.0592MHz

WDT_CONTR   DATA    0C1H

            ORG     0000H
            LJMP    MAIN

            ORG     0100H
MAIN:
            MOV     SP,#3FH

;           MOV     WDT_CONTR,#23H      ; Make a watchdog, the overflow time is about 0.5s
            MOV     WDT_CONTR,#24H      ;Make a watchdog, the overflow time is about 1s
;           MOV     WDT_CONTR,#27H      ; Make a watchdog, the overflow time is about 8s
            CLR     P3.2                ; Test port
LOOP:
;           ORL     WDT_CONTR,#10H      ; Clear watchdog, otherwise the system reset
            JMP     LOOP

      END
```

C code

```
#include "reg51.h"
#include "intrins.h"

// The test frequency is 11.0592MHz

sfr     WDT_CONTR   =   0xc1;
sbit    P32         =   P3^2;

void main()
{
//    WDT_CONTR = 0x23;         // Make a watchdog, the overflow time is about 0.5s
      WDT_CONTR = 0x24;         // Make a watchdog, the overflow time is about 1s
//    WDT_CONTR = 0x27;         // Make a watchdog, the overflow time is about 8s
      P32 = 0;                  // Test port

      while (1)
      {
//          WDT_CONTR |= 0x10;  // Clear watchdog, otherwise the system reset
      }
}
```

7.4.4 Soft reset to implement custom Downloads

Assembly code

```
; The test frequency is 11.0592MHz

IAP_CONTR   DATA    0C7H
```

```
                ORG     0000H
                LJMP    MAIN

                ORG     0100H
MAIN:
                MOV     SP,#3FH

                SETB    P3.2
                SETB    P3.3
LOOP:
                JB      P3.2,LOOP
                JB      P3.3,LOOP
                MOV     IAP_CONTR,#60H          ; Check P3.2 and P3.3 at the same time for 0 to reset ISP
                JMP     $

        END
```

C code

```
#include "reg51.h"
#include "intrins.h"

// The test frequency is 11.0592MHz

sfr     IAP_CONTR   =   0xc7;
sbit    P32         =   P3^2;
sbit    P33         =   P3^3;

void main()
{
        P32 = 1;                        // Test port
        P33 = 1;                        // Test port

        while (1)
        {
                if (!P32 && !P33)
                {
                        IAP_CONTR |= 0x60;      // Check P3.2 and P3.3 at the same time for 0 to reset ISP
                }
        }
}
```

7.4.5 Low voltage detection

assembly code

```
RSTCFG      DATA    0FFH
ENLVR       EQU     40H             ;RSTCFG.6
LVD2V2      EQU     00H             ;LVD@2.2V
LVD2V4      EQU     01H             ;LVD@2.4V
LVD2V7      EQU     02H             ;LVD@2.7V
LVD3V0      EQU     03H             ;LVD@3.0V
ELVD        BIT     IE.6
LVDF        EQU     20H             ;PCON.5

            ORG     0000H
            LJMP    MAIN
```

```
                ORG     0033H
                LJMP    LVDISR

                ORG     0100H
LVDISR:
                ANL     PCON,#NOT LVDF          ; Clear interruption sign
                CPL     P3.2                    ; Test port
        RETI
MAIN:
                MOV     SP,#3FH

                ANL     PCON,#NOT LVDF          ; Need to clear the LVDF logo after power-on
;               MOV     RSTCFG,#ENLVR | LVD3V0  ; Enables low voltage reset at 3.0V without LVD interrupt
                MOV     RSTCFG,#LVD3V0          ; Low voltage interrupt when 3.0V is enabled
                SETB    ELVD                    ; Enable LVD interrupt
                SETB    EA
                JMP     $

        END
```

C code

```
#include "reg51.h"
#include "intrins.h"

sfr     RSTCFG      =   0xff;
#define ENLVR           0x40    //RSTCFG.6
#define LVD2V2          0x00    //LVD@2.2V
#define LVD2V4          0x01    //LVD@2.4V
#define LVD2V7          0x02    //LVD@2.7V
#define LVD3V0          0x03    //LVD@3.0V
sbit    ELVD        =   IE^6;
#define LVDF            0x20    //PCON.5
sbit    P32         =   P3^2;

void Lvd_Isr() interrupt 6
{
        PCON &= ~LVDF;              // Clear interruption sign
        P32 = ~P32;                 // Test port
}

void main()
{
        PCON &= ~LVDF;              // Test port
//      RSTCFG = ENLVR | LVD3V0;    // Enables low voltage reset at 3.0V without LVD interrupt
        RSTCFG = LVD3V0;            // Low voltage interrupt when 3.0V is enabled
        ELVD = 1;                   // Enable LVD interrupt
        EA = 1;

        while (1);
}
```

7.4.6 Power saving mode

assembly code

```
VOCTRL      DATA    0BBH
IDL         EQU     01H             ;PCON.0
PD          EQU     02H             ;PCON.1

            ORG     0000H
            LJMP    MAIN
            ORG     0003H
            LJMP    INT0ISR

            ORG     0100H
INT0ISR:
            CPL     P3.4            ; Test port
    RETI
MAIN:
            MOV     SP,#3FH

            MOV     VOCTRL,#00H
; When the power down mode is used, the internal SCC module is used, and the power consumption is about 1.5uA
;           MOV     VOCTRL,#80H
; When the power down mode is used, the external SCC module is used, and the power consumption is abou 0.15uA
            SETB    EX0             ; Enable INT0 interruption to wake up MCU
            SETB    EA
    NOP
    NOP
;           MOV     PCON,#IDL       ; MCU enters the IDLE mode
            MOV     PCON,#PD        ; MCU enters the power down mode
    NOP
    NOP
            CLR     P3.5            ; Test port
            JMP     $

    END
```

C code

```
#include "reg51.h"
#include "intrins.h"

sfr     VOCTRL  =   0xbb;
#define IDL         0x01    //PCON.0
#define PD          0x02    //PCON.1
sbit    P34     =   P3^4;
sbit    P35     =   P3^5;

void INT0_Isr() interrupt 0
{
    P34 = ~P34;             // Test port
}

void main()
{
    VOCTRL = 0x00;
//When the power down mode is used, the internal SCC module is used, and the power consumption is about 1.5uA
//      VOCTRL = 0x80;
// When the power down mode is used, the external SCC module is used, and the power consumption is abou 0.15uA
```

```
    EX0 = 1;                    // Enable INT0 interruption to wake up MCU
    EA = 1;
    _nop_();
    _nop_();
    PCON = IDL;                 // MCU enters the IDLE mode
//  PCON = PD;                  // MCU enters the power down mode
    _nop_();
    _nop_();
    P35 = 0;

    while (1);
}
```

7.4.7 Wake-up MCU with INT0/INT1/INT2/INT3/INT4 interrupt

assembly code

```
INTCLKO     DATA    8FH
EX2         EQU     10H
EX3         EQU     20H
EX4         EQU     40H

            ORG     0000H
            LJMP    MAIN

            ORG     0003H
            LJMP    INT0ISR
            ORG     0013H
            LJMP    INT1ISR
            ORG     0053H
            LJMP    INT2ISR
            ORG     005BH
            LJMP    INT3ISR
            ORG     0083H
            LJMP    INT4ISR

            ORG     0100H
INT0ISR:
            CPL     P1.0            ; Test port
    RETI
INT1ISR:
            CPL     P1.0            ; Test port
    RETI
INT2ISR:
            CPL     P1.0            ; Test port
    RETI
INT3ISR:
            CPL     P1.0            ; Test port
    RETI
INT4ISR:
            CPL     P1.0            ; Test port
    RETI
```

```
MAIN:
            MOV     SP,#3FH

            CLR     IT0             ; Enable INT0 rising edge and falling edge interruption
;           SETB    IT0             ; Enable INT0 falling edge interruptio
            SETB    EX0             ; Enable INT0 interruption

            CLR     IT1             ; Enable INT1 rising edge and falling edge interruption
;           SETB    IT1             ; Enable INT1 falling edge interruptio
            SETB    EX1             ; Enable INT0 interruption

            MOV     INTCLKO,#EX2    ; Enable INT2 falling edge interruptio
            ORL     INTCLKO,#EX3    ; Enable INT3 falling edge interruptio
            ORL     INTCLKO,#EX4    ; Enable INT4 falling edge interruptio

            SETB    EA

            MOV     PCON,#02H       ; MCU enters the power down mode
            NOP             ;Enter interruption service program immediately after power down wake-up
NOP
LOOP:
            CPL     P1.1
            JMP     LOOP

    END
```

C code

```
#include "reg51.h"
#include "intrins.h"

sfr     INTCLKO     =   0x8f;
#define EX2             0x10
#define EX3             0x20
#define EX4             0x40

sbit    P10         =   P1^0;
sbit    P11         =   P1^1;

void INT0_Isr() interrupt 0
{
    P10 = !P10;                 // Test port
}

void INT1_Isr() interrupt 2
{
    P10 = !P10;                 // Test port
}

void INT2_Isr() interrupt 10
{
    P10 = !P10;                 // Test port
}

void INT3_Isr() interrupt 11
{
    P10 = !P10;                 // Test port
```

```
}

void INT4_Isr() interrupt 16
{
    P10 = !P10;                     // Test port
}

void main()
{
    IT0 = 0;                        // Enable INT0 rising edge and falling edge interruption
//  IT0 = 1;                        // Enable INT0 falling edge interruption
    EX0 = 1;                        // Enable INT0 interruption

    IT1 = 0;                        // Enable INT1 rising edge and falling edge interruption
//  IT1 = 1;                        // Enable INT1 falling edge interruption
    EX1 = 1;                        // Enable INT0 interruption

    INTCLKO = EX2;                  //Enable INT2 falling edge interruptio
    INTCLKO |= EX3;                 //Enable INT3 falling edge interruptio
    INTCLKO |= EX4;                 //Enable INT4 falling edge interruptio

    EA = 1;

    PCON = 0x02;                    // MCU enters the power down mode
    _nop_();                        // Enter interruption service program immediately after power down wake-up
    _nop_();

    while (1)
    {
        P11 = ~P11;
    }
}
```

7.4.8 Wake-up MCU with T0/T1/T2/T3/T4 interrupts

assembly code

```
; The test frequency is 11.0592MHz

T2L         DATA    0D7H
T2H         DATA    0D6H
T3L         DATA    0D5H
T3H         DATA    0D4H
T4L         DATA    0D3H
T4H         DATA    0D2H
T4T3M       DATA    0D1H
AUXR        DATA    8EH
IE2         DATA    0AFH
ET2         EQU     04H
ET3         EQU     20H
ET4         EQU     40H
AUXINTIF    DATA    0EFH
T2IF        EQU     01H
T3IF        EQU     02H
T4IF        EQU     04H
```

```
            ORG     0000H
            LJMP    MAIN
            ORG     000BH
            LJMP    TM0ISR
            ORG     001BH
            LJMP    TM1ISR
            ORG     0063H
            LJMP    TM2ISR
            ORG     009BH
            LJMP    TM3ISR
            ORG     00A3H
            LJMP    TM4ISR

            ORG     0100H
TM0ISR:
            CPL     P1.0                ; Test port
    RETI
TM1ISR:
            CPL     P1.0                ; Test port
    RETI
TM2ISR:
            CPL     P1.0                ; Test port
            ANL     AUXINTIF,#NOT T2IF  ; Clear interruption sign
    RETI
TM3ISR:
            CPL     P1.0                ; Test port
            ANL     AUXINTIF,#NOT T3IF  ; Clear interruption sign
    RETI
TM4ISR:
            CPL     P1.0                ; Test port
            ANL     AUXINTIF,#NOT T4IF  ; Clear interruption sign
    RETI

MAIN:
            MOV     SP,#3FH

            MOV     TMOD,#00H
            MOV     TL0,#66H            ;65536-11.0592M/12/1000
            MOV     TH0,#0FCH
            SETB    TR0                 ; Start timer
            SETB    ET0                 ; Enable timer interruption

            MOV     TL1,#66H            ;65536-11.0592M/12/1000
            MOV     TH1,#0FCH
            SETB    TR1                 ; Start timer
            SETB    ET1                 ; Enable timer interruption

            MOV     T2L,#66H            ;65536-11.0592M/12/1000
            MOV     T2H,#0FCH
            MOV     AUXR,#10H           ; Start timer
            MOV     IE2,#ET2            ; Enable timer interruption

            MOV     T3L,#66H            ;65536-11.0592M/12/1000
            MOV     T3H,#0FCH
```

```
                MOV     T4T3M,#08H          ; Start timer
                ORL     IE2,#ET3            ; Enable timer interruption

                MOV     T4L,#66H            ;65536-11.0592M/12/1000
                MOV     T4H,#0FCH
                ORL     T4T3M,#80H          ; Start timer
                ORL     IE2,#ET4            ; Enable timer interruption

                SETB    EA

                MOV     PCON,#02H           ; MCU enters the power down mode
                    NOP
; After the power down, it will not enter the interrupt service program immediately,
;It will wait for the timer overflow to enter the interrupt service program
        NOP
LOOP:
                CPL     P1.1
                JMP     LOOP

        END
```

C code

```
#include "reg51.h"
#include "intrins.h"

// The test frequency is 11.0592MHz

sfr     T2L         =   0xd7;
sfr     T2H         =   0xd6;
sfr     T3L         =   0xd5;
sfr     T3H         =   0xd4;
sfr     T4L         =   0xd3;
sfr     T4H         =   0xd2;
sfr     T4T3M       =   0xd1;
sfr     AUXR        =   0x8e;
sfr     IE2         =   0xaf;
#define ET2             0x04
#define ET3             0x20
#define ET4             0x40
sfr     AUXINTIF    =   0xef;
#define T2IF            0x01
#define T3IF            0x02
#define T4IF            0x04

sbit    P10         =   P1^0;
sbit    P11         =   P1^1;

void TM0_Isr() interrupt 1
{
    P10 = !P10;                     // Test port
}

void TM1_Isr() interrupt 3
{
    P10 = !P10;                     // Test port
}
```

```
void TM2_Isr() interrupt 12
{
        P10 = !P10;                     // Test port
        AUXINTIF &= ~T2IF;              // Clear interruption sign
}

void TM3_Isr() interrupt 19
{
        P10 = !P10;                     // Test port
        AUXINTIF &= ~T3IF;              // Clear interruption sign
}

void TM4_Isr() interrupt 20
{
        P10 = !P10;                     // Test port
        AUXINTIF &= ~T4IF;              // Clear interruption sign
}

void main()
{
        TMOD = 0x00;
        TL0 = 0x66;                     //65536-11.0592M/12/1000
        TH0 = 0xfc;
        TR0 = 1;                        // Start timer
        ET0 = 1;                        // Enable timer interruption

        TL1 = 0x66;                     //65536-11.0592M/12/1000
        TH1 = 0xfc;
        TR1 = 1;                        // Start timer
        ET1 = 1;                        // Enable timer interruption

        T2L = 0x66;                     //65536-11.0592M/12/1000
        T2H = 0xfc;
        AUXR = 0x10;                    // Start timer
        IE2 = ET2;                      // Enable timer interruption

        T3L = 0x66;                     //65536-11.0592M/12/1000
        T3H = 0xfc;
        T4T3M = 0x08;                   // Start timer
        IE2 |= ET3;                     // Enable timer interruption

        T4L = 0x66;                     //65536-11.0592M/12/1000
        T4H = 0xfc;
        T4T3M |= 0x80;                  // Start timer
        IE2 |= ET4;                     // Enable timer interruption

        EA = 1;

        PCON = 0x02;                    // MCU enters the power down mode
        _nop_();
  //After the power fail, it will not enter the interrupt service program immediately,
  // It will wait for the timer overflow to enter the interrupt service program
        _nop_();

        while (1)
```

```
    {
        P11 = ~P11;
    }
}
```

7.4.9 Wake-up MCU with RxD/RxD2/RxD3/RxD4 interrupt

assembly code

```
; The test frequency is 11.0592MHz

IE2         DATA    0AFH
ES2         EQU     01H
ES3         EQU     08H
ES4         EQU     10H

P_SW1       DATA    0A2H
P_SW2       DATA    0BAH


            ORG     0000H
            LJMP    MAIN
            ORG     0023H
            LJMP    UART1ISR
            ORG     0043H
            LJMP    UART2ISR
            ORG     008BH
            LJMP    UART3ISR
            ORG     0093H
            LJMP    UART4ISR

            ORG     0100H
UART1ISR:
    RETI
UART2ISR:
    RETI
UART3ISR:
    RETI
UART4ISR:
    RETI

MAIN:
            MOV     SP,#3FH

            MOV     P_SW1,#00H      ; The falling edge of the RXD/P3.0 can wake up the program
;           MOV     P_SW1,#40H      ; The falling edge of the RXD_2/P3.6 can wake up the program
;           MOV     P_SW1,#80H      ; The falling edge of the RXD_3/P1.6 can wake up the program
;           MOV     P_SW1,#0C0H     ; The falling edge of the RXD_4/P4.3 can wake up the
program

            MOV     P_SW2,#00H      ; The falling edge of the RXD2/P1.0 can wake up the program
;           MOV     P_SW2,#01H      ; The falling edge of the RXD2_2/P4.0 can wake up the program
            MOV     P_SW2,#00H      ; The falling edge of the RXD3/P0.0 can wake up the program
```

```
;               MOV     P_SW2,#02H      ; The falling edge of the RXD3_2/P5.0 can wake up the program

                MOV     P_SW2,#00H      ; The falling edge of the RXD4/P0.2 can wake up the program
;               MOV     P_SW2,#04H      ; The falling edge of the RXD4_2/P5.2 can wake up the program

                SETB    ES              ; Enable the interruption of the serial port
                MOV     IE2,#ES2        ; Enable the interruption of the serial port
                ORL     IE2,#ES3        ; Enable the interruption of the serial port
                ORL     IE2,#ES4        ; Enable the interruption of the serial port
                SETB    EA

                MOV     PCON,#02H       ; MCU enters the power down mode
                NOP                     ; After the power down, it will not enter the
                                        ;interrupt service program
        NOP
LOOP:
                CPL     P1.1
                JMP     LOOP

        END
```

C code

```
#include "reg51.h"
#include "intrins.h"

// The test frequency is 11.0592MHz

sfr     IE2     =   0xaf;
#define ES2         0x01
#define ES3         0x08
#define ES4         0x10

sfr     P_SW1   =   0xa2;
sfr     P_SW2   =   0xba;

sbit    P11     =   P1^1;

void UART1_Isr() interrupt 4
{
}

void UART2_Isr() interrupt 8
{
}

void UART3_Isr() interrupt 17
{
}

void UART4_Isr() interrupt 18
{
}

void main()
{
    P_SW1 = 0x00;           // The falling edge of the RXD/P3.0 can wake up the program
```

```
//      P_SW1 = 0x40;           // The falling edge of the RXD_2/P3.6 can wake up the program
//      P_SW1 = 0x80;           // The falling edge of the RXD_3/P1.6 can wake up the program
//      P_SW1 = 0xc0;           // The falling edge of the RXD_4/P4.3 can wake up the program

        P_SW2 = 0x00;           // The falling edge of the RXD2/P1.0 can wake up the program
//      P_SW2 = 0x01;           / The falling edge of the /RXD2_2/P4.0 can wake up the program

        P_SW2 = 0x00;           // The falling edge of the RXD3/P0.0 can wake up the program
//      P_SW2 = 0x02;           // The falling edge of the RXD3_2/P5.0 can wake up the program

        P_SW2 = 0x00;           // The falling edge of the RXD4/P0.2 can wake up the program
//      P_SW2 = 0x04;           / The falling edge of the /RXD4_2/P5.2 can wake up the program

        ES = 1;                 // Enable the interruption of the serial port
        IE2 = ES2;              // Enable the interruption of the serial port
        IE2 |= ES3;             // Enable the interruption of the serial port
        IE2 |= ES4;             // Enable the interruption of the serial port
        EA = 1;

        PCON = 0x02;            // MCU enters the power down mode
        _nop_();                // After the power fail, it will not enter the interrupt service program
        _nop_();

        while (1)
        {
            P11 = ~P11;
        }
}
```

7.4.10 Wake-up MCU with LVD interrupt

Assembly code

```
RSTCFG      DATA    0FFH
ENLVR       EQU     40H             ;RSTCFG.6
LVD2V2      EQU     00H             ;LVD@2.2V
LVD2V4      EQU     01H             ;LVD@2.4V
LVD2V7      EQU     02H             ;LVD@2.7V
LVD3V0      EQU     03H             ;LVD@3.0V
ELVD        BIT     IE.6
LVDF        EQU     20H             ;PCON.5

            ORG     0000H
            LJMP    MAIN
            ORG     0033H
            LJMP    LVDISR

            ORG     0100H
LVDISR:
            ANL     PCON,#NOT LVDF  ; Clear interruption sign
            CPL     P1.0            ; Test port
    RETI

MAIN:
            MOV     SP,#3FH
```

```
                ANL     PCON,#NOT LVDF      ; Power on needs clear interruption signs
                MOV     RSTCFG,# LVD3V0     ; Set the LVD voltage to 3.0V V
                SETB    ELVD                ; Enable the interruption of LVD
                SETB    EA

                MOV     PCON,#02H           ; MCU enters the power down mode
                NOP                         ; Enter interruption service program
                                            ; immediately after power down wake-up
        NOP
LOOP:
                CPL     P1.1
                JMP     LOOP

        END
```

C code

```
#include "reg51.h"
#include "intrins.h"

sfr     RSTCFG      =   0xff;
#define ENLVR           0x40    //RSTCFG.6
#define LVD2V2          0x00    //LVD@2.2V
#define LVD2V4          0x01    //LVD@2.4V
#define LVD2V7          0x02    //LVD@2.7V
#define LVD3V0          0x03    //LVD@3.0V
sbit    ELVD        =   IE^6;
#define LVDF            0x20    //PCON.5

sbit    P10         =   P1^0;
sbit    P11         =   P1^1;

void LVD_Isr() interrupt 6
{
    PCON &= ~LVDF;              // Clear interruption sign
    P10 = !P10;                 // Test port
}

void main()
{
    PCON &= ~LVDF;              // Power on needs clear interruption signs
    RSTCFG = LVD3V0;            // Set the LVD voltage to 3.0V
    ELVD = 1;                   // Enable the interruption of LVD
    EA = 1;

    PCON = 0x02;                // MCU enters the power down mode
    _nop_();                    // Enter interruption service program immediately after power down wake-up
    _nop_();

    while (1)
    {
        P11 = ~P11;
    }
}
```

7.4.11 Wake-up MCU with CCP0/CCP1/CCP2/CCP3 interrupt

assembly code

```
; The test frequency is 11.0592MHz

CCON        DATA    0D8H
CF          BIT     CCON.7
CR          BIT     CCON.6
CCF3        BIT     CCON.3
CCF2        BIT     CCON.2
CCF1        BIT     CCON.1
CCF0        BIT     CCON.0
CMOD        DATA    0D9H
CL          DATA    0E9H
CH          DATA    0F9H
CCAPM0      DATA    0DAH
CCAP0L      DATA    0EAH
CCAP0H      DATA    0FAH
PCA_PWM0    DATA    0F2H
CCAPM1      DATA    0DBH
CCAP1L      DATA    0EBH
CCAP1H      DATA    0FBH
PCA_PWM1    DATA    0F3H
CCAPM2      DATA    0DCH
CCAP2L      DATA    0ECH
CCAP2H      DATA    0FCH
PCA_PWM2    DATA    0F4H
CCAPM3      DATA    0DDH
CCAP3L      DATA    0EDH
CCAP3H      DATA    0FDH
PCA_PWM3    DATA    0F5H

P_SW1       DATA    0A2H

            ORG     0000H
            LJMP    MAIN
            ORG     003BH
            LJMP    PCAISR

            ORG     0100H
PCAISR:
            ANL     CCON,#NOT 8FH       ; Clear interruption sign
            CPL     P1.0                ; Test port
      RETI

MAIN:
            MOV     SP,#3FH

            MOV     P_SW1,#00H      ; CCP0/P1.7, CCP1/P1.6, CCP2/P1.5,CCP3/P1.4
;           MOV     P_SW1,#10H      ; CCP0_2/P2.3, CCP1_2/P2.4, CCP2_2/P2.5,CCP3_2/P2.6
;           MOV     P_SW1,#20H      ; CCP0_3/P7.0, CCP1_3/P7.1, CCP2_3/P7.2,CCP3_3/P7.3
;           MOV     P_SW1,#30H      ; CCP0_4/P3.3, CCP1_4/P3.2, CCP2_4/P3.1,CCP3_4/P3.0

            MOV     CCON,#00H
            MOV     CMOD,#08H           ; The PCA clock is a system clock
            MOV     CCAPM0,#31H         ; Enable the edge of wake-up function of the CCP0 port
```

```
            MOV     CCAPM1,#31H     ; Enable the edge of wake-up function of the CCP1 port
            MOV     CCAPM2,#31H     ; Enable the edge of wake-up function of the CCP2 port
            MOV     CCAPM3,#31H     ; Enable the edge of wake-up function of the CCP3 port
            SETB    CR              ; Start the PCA timer
            SETB    EA

            MOV     PCON,#02H       ; MCU enters the power down mode
            NOP                     ; Enter interruption service program
                                    ; immediately after power down wake-up

    NOP

LOOP:
            CPL     P1.1
            JMP     LOOP

    END
```

C code

```
#include "reg51.h"
#include "intrins.h"

// The test frequency is 11.0592MHz

sfr     CCON        =   0xd8;
sbit    CF          =   CCON^7;
sbit    CR          =   CCON^6;
sbit    CCF3        =   CCON^3;
sbit    CCF2        =   CCON^2;
sbit    CCF1        =   CCON^1;
sbit    CCF0        =   CCON^0;
sfr     CMOD        =   0xd9;
sfr     CL          =   0xe9;
sfr     CH          =   0xf9;
sfr     CCAPM0      =   0xda;
sfr     CCAP0L      =   0xea;
sfr     CCAP0H      =   0xfa;
sfr     PCA_PWM0    =   0xf2;
sfr     CCAPM1      =   0xdb;
sfr     CCAP1L      =   0xeb;
sfr     CCAP1H      =   0xfb;
sfr     PCA_PWM1    =   0xf3;
sfr     CCAPM2      =   0xdc;
sfr     CCAP2L      =   0xec;
sfr     CCAP2H      =   0xfc;
sfr     PCA_PWM2    =   0xf4;
sfr     CCAPM3      =   0xdd;
sfr     CCAP3L      =   0xed;
sfr     CCAP3H      =   0xfd;
sfr     PCA_PWM3    =   0xf5;

sfr     P_SW1       =   0xa2;

sbit    P10         =   P1^0;
sbit    P11         =   P1^1;
```

```
void PCA_Isr() interrupt 7
{
    CCON &= ~0x8f;              // Clear interruption sign
    P10 = !P10;                 // Test port
}

void main()
{
    P_SW1 = 0x00;               //CCP0/P1.7, CCP1/P1.6, CCP2/P1.5,CCP3/P1.4
//  P_SW1 = 0x10;               //CCP0_2/P2.3, CCP1_2/P2.4, CCP2_2/P2.5,CCP3_2/P2.6
//  P_SW1 = 0x20;               //CCP0_3/P7.0, CCP1_3/P7.1, CCP2_3/P7.2,CCP3_3/P7.3
//  P_SW1 = 0x30;               //CCP0_4/P3.3, CCP1_4/P3.2, CCP2_4/P3.1,CCP3_4/P3.0

    CCON = 0x00;
    CMOD = 0x08;                // The PCA clock is a system clock
    CCAPM0 = 0x31;              // Enable the edge of wake-up function of the CCP0 port
    CCAPM1 = 0x31;              // Enable the edge of wake-up function of the CCP1 port
    CCAPM2 = 0x31;              // Enable the edge of wake-up function of the CCP2 port
    CCAPM3 = 0x31;              // Enable the edge of wake-up function of the CCP3 port

    CR = 1;                     // Start the PCA timer
    EA = 1;

    PCON = 0x02;                // MCU enters the power down mode
   _nop_();                     // Enter interruption service program immediately after power down wake-up

    _nop_();

    while (1)
    {
        P11 = ~P11;
    }
}
```

7.4.12 CMP interrupt wake-up MCU

assembly code

```
CMPCR1      DATA    0E6H
CMPCR2      DATA    0E7H

            ORG     0000H
            LJMP    MAIN
            ORG     00ABH
            LJMP    CMPISR

            ORG     0100H
CMPISR:
            ANL     CMPCR1,#NOT 40H     ; Clear interruption sign
            CPL     P1.0                ; Test port
    RETI

MAIN:
            MOV     SP,#3FH
```

```
        MOV     CMPCR2,#00H
        MOV     CMPCR1,#80H         ; Enable comparator module
        ORL     CMPCR1,#30H         ; Enable the edge of the comparator interruption
        ANL     CMPCR1,#NOT 08H     ; P3.6 is the CMP+ input port
        ORL     CMPCR1,#04H         ;P3.7 is the CMP- input port
        ORL     CMPCR1,#02H         ; Enable comparator output
        SETB    EA

        MOV     PCON,#02H           ; MCU enters the power down mode
        NOP                         ; Enter interruption service program
                                   ; immediately after power down wake-up

    NOP

LOOP:
        CPL     P1.1
        JMP     LOOP

    END
```

C code

```
#include "reg51.h"
#include "intrins.h"

sfr     CMPCR1      =   0xe6;
sfr     CMPCR2      =   0xe7;

sbit    P10         =   P1^0;
sbit    P11         =   P1^1;

void CMP_Isr() interrupt 21
{
    CMPCR1 &= ~0x40;            // Clear interruption sign
    P10 = !P10;                 // Test port
}

void main()
{
    CMPCR2 = 0x00;
    CMPCR1 = 0x80;              // Enable comparator module
    CMPCR1 |= 0x30;             // Enable the edge of the comparator interruption
    CMPCR1 &= ~0x08;            // P3.6 is the CMP+ input port
    CMPCR1 |= 0x04;             //P3.7 is the CMP- input port
    CMPCR1 |= 0x02;             // Enable comparator output
    EA = 1;

    PCON = 0x02;                // MCU enters the power down mode
    _nop_();                    // Enter interruption service program immediately after power down wake-up
    _nop_();

    while (1)
    {
        P11 = ~P11;
```

```
    }
}
```

7.4.13 Using LVD function to detect working Voltage(cell voltage)

If you need to use the LVD function to detect the battery voltage, you need to remove the low-voltage reset feature from the ISP download, as shown in the following figure "allow low-voltage reset (no low-voltage interruptions)" hardware options need to be removed

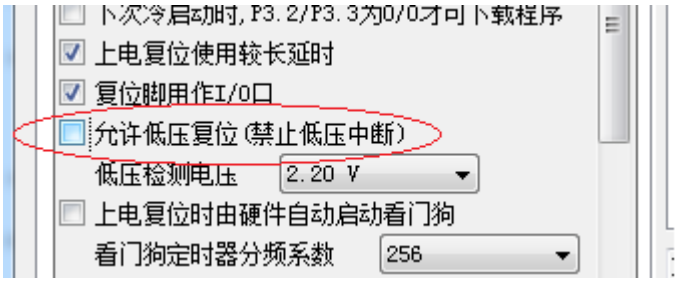

assembly code

```
RSTCFG      DATA    0FFH
LVD2V2      EQU     00H             ;LVD@2.2V
LVD2V4      EQU     01H             ;LVD@2.4V
LVD2V7      EQU     02H             ;LVD@2.7V
LVD3V0      EQU     03H             ;LVD@3.0V
LVDF        EQU     20H             ;PCON.5

            ORG     0000H
            JMP     MAIN

            ORG     0100H
MAIN:
            ANL     PCON,#NOT LVDF
            MOV     RSTCFG,#LVD3V0
LOOP:
            MOV     B,#0FH

            MOV     RSTCFG,#LVD3V0
            CALL    DELAY
            ANL     PCON,#NOT LVDF
            CALL    DELAY
            MOV     A,PCON
            ANL     A,#LVDF
            JZ      SKIP
            MOV     A,B
            CLR     C
            RRC     A
            MOV     B,A

            MOV     RSTCFG,#LVD2V7
            CALL    DELAY
            ANL     PCON,#NOT LVDF
            CALL    DELAY
            MOV     A,PCON
            ANL     A,#LVDF
            JZ      SKIP
```

```
        MOV     A,B
        CLR     C
        RRC     A
        MOV     B,A

        MOV     RSTCFG,#LVD2V4
        CALL    DELAY
        ANL     PCON,#NOT LVDF
        CALL    DELAY
        MOV     A,PCON
        ANL     A,#LVDF
        JZ      SKIP
        MOV     A,B
        CLR     C
        RRC     A
        MOV     B,A

        MOV     RSTCFG,#LVD2V2
        CALL    DELAY
        ANL     PCON,#NOT LVDF
        CALL    DELAY
        MOV     A,PCON
        ANL     A,#LVDF
        JZ      SKIP
        MOV     A,B
        CLR     C
        RRC     A
        MOV     B,A

SKIP:
        MOV     A,B
        CPL     A
        MOV     P2,A            ;P2.3~P2.0 display the battery power
        JMP     LOOP

DELAY:
        MOV     R0,#100
NEXT:
    NOP
    NOP
    NOP
    NOP
        DJNZ    R0,NEXT
    RET

    END
```

C code

```
#include "reg51.h"
#include "intrins.h"

#define FOSC        24000000UL
#define T1MS        (65536 - FOSC/4/100)
```

```
sfr     RSTCFG      =   0xff;
#define LVD2V2          0x00    //LVD@2.2V
#define LVD2V4          0x01    //LVD@2.4V
#define LVD2V7          0x02    //LVD@2.7V
#define LVD3V0          0x03    //LVD@3.0V

#define LVDF            0x20    //PCON.5

void delay()
{
    int i;

    for (i=0; i<100; i++)
    {
        _nop_();
        _nop_();
        _nop_();
        _nop_();
    }
}

void main()
{
    unsigned char power;

    PCON &= ~LVDF;
    RSTCFG = LVD3V0;

    while (1)
    {
        power = 0x0f;

        RSTCFG = LVD3V0;
        delay();
        PCON &= ~LVDF;
        delay();
        if (PCON & LVDF)
        {
            power >>= 1;

            RSTCFG = LVD2V7;
            delay();
            PCON &= ~LVDF;
            delay();
            if (PCON & LVDF)
            {
                power >>= 1;

                RSTCFG = LVD2V4;
                delay();
                PCON &= ~LVDF;
                delay();
                if (PCON & LVDF)
                {
                    power >>= 1;
```

```
                    RSTCFG = LVD2V2;
                    delay();
                    PCON &= ~LVDF;
                    delay();
                    if (PCON & LVDF)
                    {
                        power >>= 1;
                    }
                }
            }
        }

        RSTCFG = LVD3V0;
        P2 = ~power;                    //P2.3~P2.0 display the battery power
    }
}
```

STC MCU

8 Memory

STC8 Series MCU's program memory and data memory are individually addressable. Because no bus that accesses external program memory is provided, all program memory of all MCU is Flash memory on chip, and external program memory can not be accessed.

The STC8 series single chip microcomputer has integrated the large capacity data memory (STC8A8K64S4A12) inside the STC8A8K64S4A12 series single chip microcomputer with 8192 256-byte data memory and 4096 256-byte data memory inside the STC8A4K64S2A12 series single chip microcomputer. There are 2048 256words inside the STC8A8F2K64S4 series single chip microcomputer.STC8F2K64S2 Series single Chip Microcomputer with 2048 256bytes of data memory. The data memory of STC8 Series single Chip Microcomputer is physically and logically divided into two parts: STC8F2K64S2 series single-chip microcomputer and STC8F2K64S2 series single chip microcomputer. For two address spaces: internal RAM(256 bytes) and internal extension RAM.The high 128-byte data memory of the internal RAM overlaps with the special function register (SFRs) address, which is distinguished by different addressing methods in practical use.In addition, STC8 series microcontroller with 40 or more pins can also access the 64KB external data memory which is extended out of chip.

8.1 Program Memory

Program memory is used to store user programs, data, tables and other information. STC8 series monolithic integrated 64K bytes of Flash program memory.

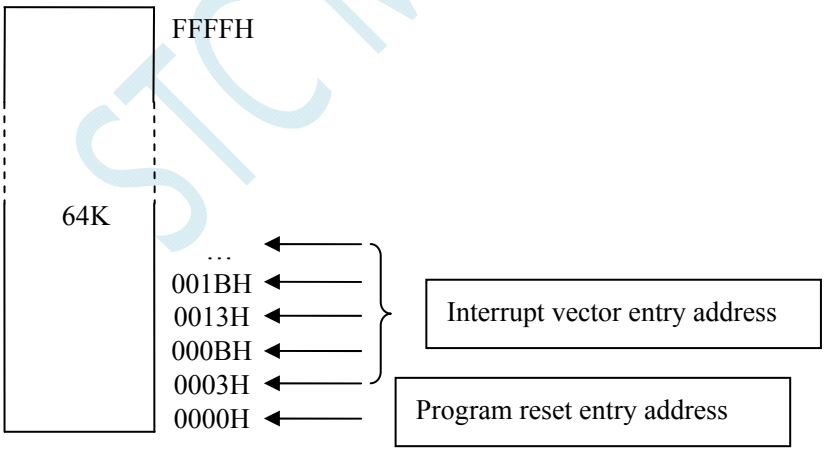

After reset, the program counter (PC) is 0000H, and the program is executed from 0000H unit.In addition, the entry address of the interrupt service program (also called interrupt vector) is also located in the program memory unit.In the program memory, each interrupt has a fixed entry address. When the interrupt occurs and is responded to, the MCU will automatically ju。mp to the corresponding interrupt entry address to execute the program.The entry address of the interrupt service program is 0003H, the entry address of the timer / counter 0 / TIMER0) interrupt service program is 000BH, and the external interrupt service program's entry address is 000BH. The entry address of interrupt service program is 0013H, and the entry address of interrupt service program of timer / counter 1 / timer is 001BH et al.For more entry addresses (interrupt vectors) for interrupt service programs, please refer to the interrupt introduction section.

Because the interval between adjacent interrupt entry addresses is only 8 bytes, it is generally impossible to save a complete interrupt service program, so an unconditional transfer instruction is stored in the address area of the

interrupt response.Points to the space where the interrupt service program is actually stored to execute.

STC8 series microcontroller contains Flash data memory.The data is read / written in bytes and erased with 512-byte as the page unit. It can be written more than 100000 times by programming repeatedly online, which improves the flexibility and convenience of use.

8.2 Data Memory

The interior-integrated RAM of the column microcontroller can be used to store intermediate results and process data of program execution. STC8A8K64S4A12 series and STC8F2K64S4 series internal integrated RAM have the following differences:

the series of chip	Internal direct access RAM (DATA)	Internal direct access RAM (IDATA)	Internal expansion RAM (XDATA)
the series of STC8A8K64S4A12	128 byte	128 byte	8192 byte
the series of STC8A4K64S2A12	128 byte	128 byte	4096 byte
the series of STC8F2K64S4	128 byte	128 byte	2048 byte
the series of STC8F2K64S2	128 byte	128 byte	2048 byte

In addition, the STC8 series microcontroller with 40 or more pins can also access the 64KB external data memory which is extended out of chip.

8.2.1 Internal RAM

The internal RAM is 256-byte and can be divided into two parts: low 128-byte RAM and high 128-byte RAM.The 128-byte data memory is compatible with the traditional 8051 and can be addressed either directly or indirectly.The high 128-byte RAM (extended in 8052) shares the same logical address as the special function register area, using 80H / FFH, but is physically independent and is distinguished by different addressing methods.High 128byte RAM can only be addressed indirectly, and special function register area can only be addressed directly.

The structure of the internal RAM is shown in the following figure:

STC MCU

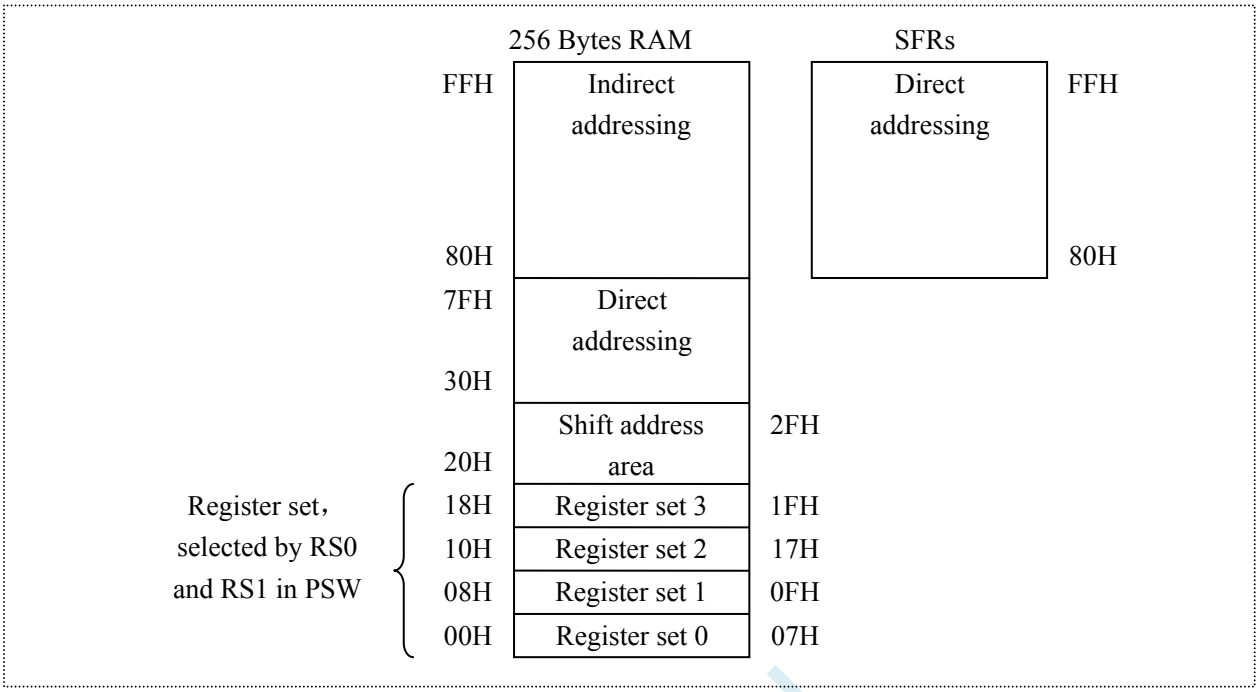

A 128-byte low RAM is also known as a general RAM zone.The general RAM area can be divided into working register area, bit-addressable area, user RAM area and stack area.The address of the working register group is divided into four groups from the 32 byte unit of 00H~1FH. Each group is called a register group. Each group contains eight 8-bit working registers, all of which are numbered R0 ~ R7, but belong to different physical spaces.By using the working register group, it is possible to improve the operation speed. R0 / R7 is a common register, and four groups are provided because the first group is often not enough.RS1 and RS in the PSW register of program status word The set of working registers currently used is determined by the 0-0 combination, as described below in the PSW register.

PSW(program status register)

Symbol	address	B7	B6	B5	B4	B3	B2	B1	B0
PSW	D0H	CY	AC	F0	**RS1**	**RS0**	OV	-	P

RS1，RS0：Working register selection bit

RS1	RS0	Work register group(R0~R7)
0	0	The Zeroth groups(00H～07H)
0	1	The first group(08H～0FH)
1	0	The second group(10H～17H)
1	1	The third group(18H～1FH)

The address of the addressable region is 16 byte units from 20H ~ 2FH. The 20H ~ 2FH 2FH unit can be accessed by bytes as ordinary RAM cells, or by any single bit in the unit. The address range of logical bit address is 00H / 7FH.The bit-address range is 00HN7FH, and the internal RAM address is 128-byte low, so the address is the same as the other. In fact, the two addresses are essentially different; the bit-address refers to a bit, and the byte address points to a byte unit.Use different instructions in a program Distinguish.

The 30H~FFH unit in the internal RAM is the user RAM and stack area.An 8-bit stack pointer is used to point to the stack area.After reset, the stack pointer SP is 07H, pointing to R7 in the working register group 0. Therefore,

the user initialization program should set the initial value to SP, which is suitable for the unit after 80H.

The stack pointer is an 8-bit special register.It indicates where the top of the stack is in the internal RAM block.After the system reset, the SP initialization bit 07H makes the stack actually start from 08H unit, considering that the 08H~1FH unit belongs to the working register group 1 / 3 respectively, if these areas are used in the program design,It is better to change the SP value to 80H or greater. The stack of STC8 series microcontroller is grown up, that is, the content of SP increaAMses after the data is pressed onto the stack.

8.2.2 Internal extended RAM

STC8 series microcontroller chip in addition to the integration of 256-byte internal RAM, but also integrated the internal expansion RAM.The method of accessing the internal extended RAM is the same as that of the traditional 8051 single chip computer to access the external extended RAM, but it does not affect the P0 port (data bus and high 8-bit address bus / P2 port), as well as the signals on the ports such as RDWR and ALE.

in assembly language , t internal extend RAM is accessed by a move X instruction

```
MOVX    A,@DPTR
MOVX    @DPTR,A
MOVX    A,@Ri
MOVX    @Ri,A
```

In C, xdata/pdata can be used to declare the storage type.Such as:

```
unsigned char xdata i;
unsigned int pdata j;
```

After subscribing to the variable of type pdata in C language, the compiler automatically allocates the variable to the 0000H~00FFH area of XDATA and accesses it by using MOVX 0000H~00FFH Riga and MOVX A@Ri.

Whether the RAM can be accessed is controlled by the EXTRAM bit in the auxiliary register AUXR.

AUXR(auxiliary register)

Symbol	address	B7	B6	B5	B4	B3	B2	B1	B0
AUXR	8EH	T0x12	T1x12	UART_M0x6	T2R	T2_C/T	T2x12	**EXTRAM**	S1ST2

EXTRAM：Extended RAM access control

0：Access the internal extension RAM.When the access address exceeds the address of the internal extension RAM, the system automatically switches to the external extension RAM

1：Access to the external extension RAM, the internal extension RAM is disabled.Extended RAM access control

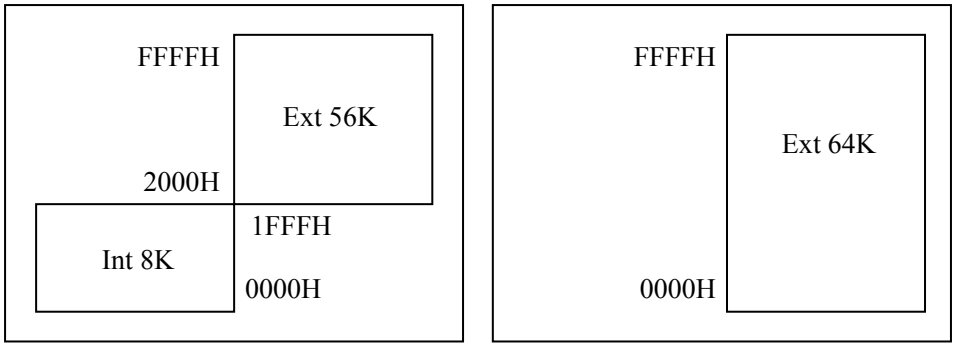

EXTRAM=0 EXTRAM=1

STC8F8K64S4A12/ STC8A8K64S4A12 series

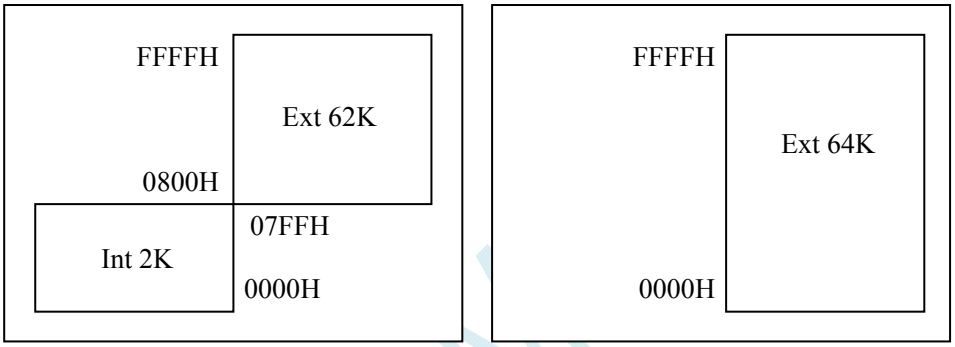

EXTRAM=0 EXTRAM=1

STC8F2K64S4 series

8.2.3 External extended RAM

The STC8 series microcontroller with 40 or more pins has the ability to extend the 64KB external data memory.During access to external data memory, the WR / RDr / ale signal must be effective. STC8 series single chip computers have added a special function register, bus SPEEDwhich controls the speed of the external 64K byte data bus. The description is as follows:

BUS_SPEED(Bus speed control register)

Symbol	address	B7	B6	B5	B4	B3	B2	B1	B0
BUS_SPEED	A1H	RW_S[1:0]						SPEED[1:0]	

RW_S[1:0]：RD/WR Control line selection bit

00：P4.4 is RD，P4.3 is WR

01：P3.7 is RD，P3.6 is WR

10：P4.2 is RD，P4.0 is WR

11：stay

SPEED[1:0]：Bus read-write speed control(Time of preparation and retention of control signals and data signals when reading and writing data)

00：1 clock
01：2 clock
10：4 clock
11：8 clock

8.3 Special Parameters in Memory

Some special parameters related to the chip are stored in the data memory and program memory of STC8 series single chip microcomputer, including the frequency of the global unique ID number 32K shutdown wake-up timer, the internal Bandgap voltage value and the IRC parameter.

The location of these parameters in the program memory ROM is as follows:

Parameter name	Save address				Parameter description
	STC8A8K16S4A12 STC8A4K16S4A12 STC8F2K16S4 STC8F2K16S2	STC8A8K32S4A12 STC8A4K32S4A12 STC8F2K32S4 STC8F2K32S2	STC8A8K60S4A12 STC8A4K60S4A12 STC8F2K60S4 STC8F2K60S2	STC8A8K64S4A12 STC8A4K64S4A12 STC8F2K64S4 STC8F2K64S2	
The only ID in the world	3FF9H~3FFFH	7FF9H~7FFFH	0EFF9H~0EFFFH	0FDF9H~0FDFFH	7byte
Bandgap voltage value	3FF7H~3FF8H	7FF7H~7FF8H	0EFF7H~0EFF8H	0FDF7H~0FDF8H	Voltage unit is mv
The frequency of 32K power down wake-up timer	3FF5H~3FF6H	7FF5H~7FF6H	0EFF5H~0EFF6H	0FDF5H~0FDF6H	Unit Hz
IRC parameters of 22.1184MHz	3FF4H	7FF4H	0EFF4H	0FDF4H	—
IRC parameters of 24MHz	3FF3H	7FF3H	0EFF3H	0FDF3H	—

The storage addresses of these parameters in the data memory RAM are as follows：

Parameter name	Save address	Parameter description
Bandgap voltage value	idata：0EFH~0F0H	Voltage unit is mv， high bytes aie in the front
The only ID in the world	idata：0F1H~0F7H	7byte
The frequency of 32K power down wake-up timer	idata：0F8H~0F9H	Unit Hz，high bytes aie in the front
IRC parameters of 22.1184MHz	idata：0FAH	—
IRC parameters of 24MHz	idata：0FBH	—

Special Explanation

1. Since the parameters in RAM may be modified, it is generally not recommended for users to use them, especially when they use ID numbers to encrypt, which is strongly recommended to read ID data in ROM.

Because STC8A8K64S4A10, STC8A4K64S2A10, STC8F2K64S4 and STC8F2K64S2, four types of EEPROM users can set their own size, it is possible to set the ROM space where important parameters are stored to EEPROM and artificially erase or modify important parameters.So use these 4 models for ID number encryption may need to consider this issue.

2. By default, the program memory has only global unique ID number data, while the Bandgap voltage value of 32K power-off timer frequency and IRC parameters are not available, you need to select the options shown in the following figure when downloading ISP.1. Since the parameters in RAM may be modified, it is generally not recommended for users to use them, especially when they use ID numbers to encrypt, which is strongly recommended to read ID data in ROM.

Because STC8A8K64S4A10, STC8A4K64S2A10, STC8F2K64S4 and STC8F2K64S2, four types of EEPROM users can set their own size, it is possible to set the ROM space where important parameters are stored to EEPROM and artificially erase or modify important parameters.So use these 4 models for ID number encryption may need to consider this issue.

3. By default, the program memory has only global unique ID number data, while the Bandgap voltage value of 32K power-off timer frequency and IRC parameters are not available, you need to select the options shown in the following figure when downloading ISP.

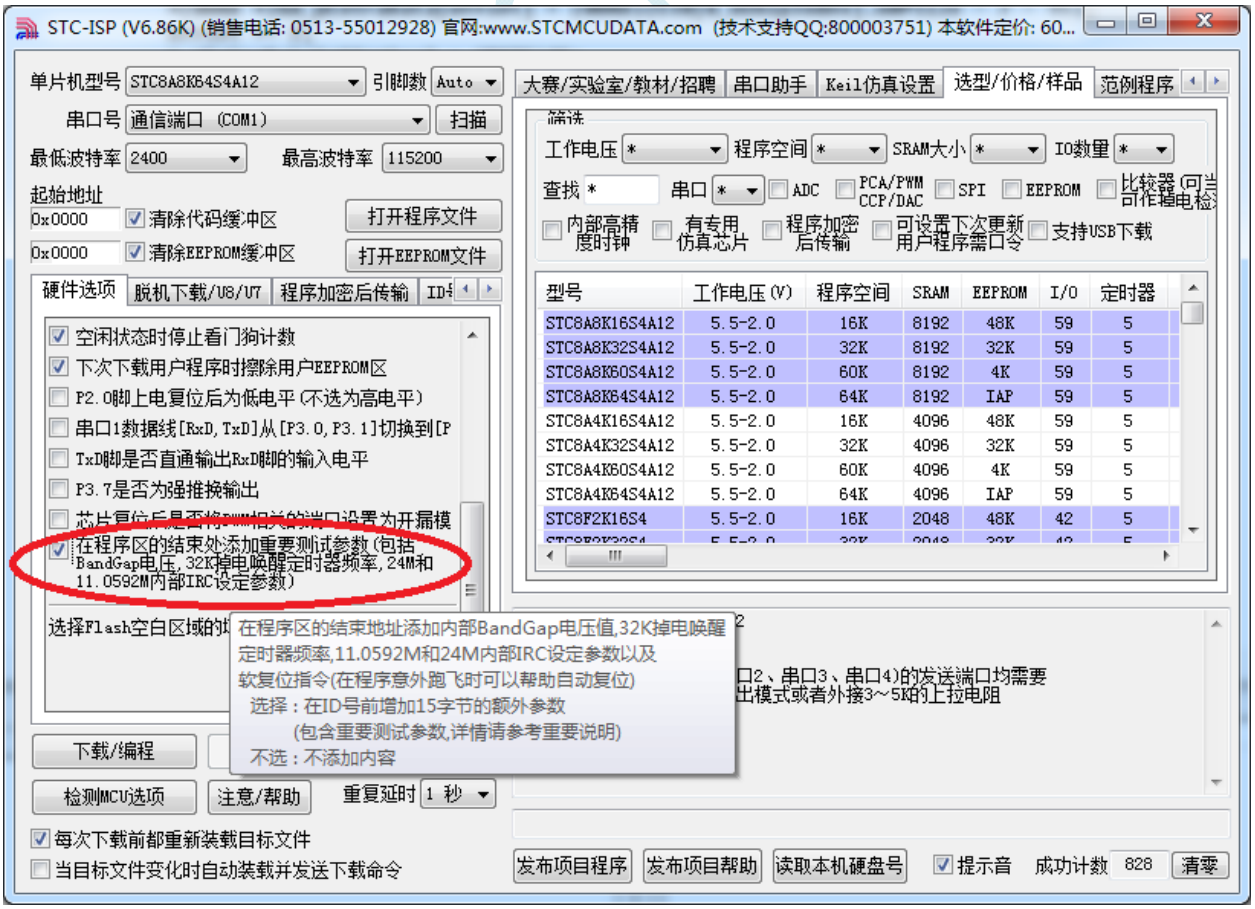

8.3.1 Read the Bandgap voltage (Read from ROM)

assembly code

```
AUXR        DATA    8EH
BGV         EQU     0FDF7H          ;STC8A8K64S4A10
;BGV        EQU     0EFF7H          ;STC8A8K60S4A10
;BGV        EQU     07FF7H          ;STC8A8K32S4A10
;BGV        EQU     03FF7H          ;STC8A8K16S4A10

BUSY        BIT     20H.0

            ORG     0000H
            LJMP    MAIN
            ORG     0023H
            LJMP    UART_ISR

            ORG     0100H

UART_ISR:
            JNB     TI,CHKRI
            CLR     TI
            CLR     BUSY
CHKRI:
            JNB     RI,UARTISR_EXIT
            CLR     RI
UARTISR_EXIT:
    RETI

UART_INIT:
            MOV     SCON,#50H
            MOV     TMOD,#00H
            MOV     TL1,#0E8H       ;65536-11059200/115200/4=0FFE8H
            MOV     TH1,#0FFH
            SETB    TR1
            MOV     AUXR,#40H
            CLR     BUSY
    RET

UART_SEND:
            JB      BUSY,$
            SETB    BUSY
            MOV     SBUF,A
    RET

MAIN:
            MOV     SP,#3FH

            LCALL   UART_INIT
            SETB    ES
            SETB    EA

            MOV     DPTR,#BGV
```

```
                CLR     A
                MOVC    A,@A+DPTR           ;// Read the high byte of the Bandgap voltage
                LCALL   UART_SEND
                MOV     A,#1
                MOVC    A,@A+DPTR           ;// Read the low byte of the Bandgap voltage
                LCALL   UART_SEND

LOOP:
                JMP     LOOP

        END
```

C code

```
#include "reg51.h"
#include "intrins.h"

#define     FOSC            11059200UL
#define     BRT             (65536 - FOSC / 115200 / 4)

sfr         AUXR        =   0x8e;

bit         busy;
int         *BGV;

void UartIsr() interrupt 4
{
        if (TI)
        {
                TI = 0;
                busy = 0;
        }
        if (RI)
        {
                RI = 0;
        }
}

void UartInit()
{
        SCON = 0x50;
        TMOD = 0x00;
        TL1 = BRT;
        TH1 = BRT >> 8;
        TR1 = 1;
        AUXR = 0x40;
        busy = 0;
}

void UARTsend(char dat)
{
        while (busy);
        busy = 1;
        SBUF = dat;
}
```

```
void main()
{
    BGV = (int code *)0xfdf7;       // STC8A8K64S4A10
//  BGV = (int code *)0xeff7;       // STC8A8K60S4A10
//  BGV = (int code *)0x7ff7;       // STC8A8K32S4A10
//  BGV = (int code *)0x3ff7;       // STC8A8K16S4A10
    UartInit();
    ES = 1;
    EA = 1;
    UARTsend(*BGV >> 8);            // Read the high byte of the Bandgap voltage
    UARTsend(*BGV);                 // Read the low byte of the Bandgap voltage

    while (1);
}
```

8.3.2 Read the Bandgap voltage (Read from RAM)

assembly code

```
AUXR        DATA    8EH
BGV         DATA    0EFH

BUSY        BIT     20H.0

            ORG     0000H
            LJMP    MAIN
            ORG     0023H
            LJMP    UART_ISR

            ORG     0100H

UART_ISR:
            JNB     TI,CHKRI
            CLR     TI
            CLR     BUSY
CHKRI:
            JNB     RI,UARTISR_EXIT
            CLR     RI
UARTISR_EXIT:
    RETI

UART_INIT:
            MOV     SCON,#50H
            MOV     TMOD,#00H
            MOV     TL1,#0E8H           ;65536-11059200/115200/4=0FFE8H
            MOV     TH1,#0FFH
            SETB    TR1
            MOV     AUXR,#40H
            CLR     BUSY
    RET

UART_SEND:
```

```
                JB      BUSY,$
                SETB    BUSY
                MOV     SBUF,A
        RET

MAIN:
                MOV     SP,#3FH

                LCALL   UART_INIT
                SETB    ES
                SETB    EA

                MOV     R0,#BGV
                MOV     A,@R0           ;// Read the high byte of the Bandgap voltage
                LCALL   UART_SEND
                INC     R0
                MOV     A,@R0           ; //ad the low byte of the Bandgap voltage
                LCALL   UART_SEND

LOOP:
                JMP     LOOP

        END
```

C code

```
#include "reg51.h"
#include "intrins.h"

#define     FOSC        11059200UL
#define     BRT         (65536 - FOSC / 115200 / 4)

sfr         AUXR    =   0x8e;

bit         busy;
int         *BGV;

void UartIsr() interrupt 4
{
    if (TI)
    {
        TI = 0;
        busy = 0;
    }
    if (RI)
    {
        RI = 0;
    }
}

void UartInit()
{
    SCON = 0x50;
    TMOD = 0x00;
    TL1 = BRT;
```

```
    TH1 = BRT >> 8;
    TR1 = 1;
    AUXR = 0x40;
    busy = 0;
}

void UARTsend(char dat)
{
    while (busy);
    busy = 1;
    SBUF = dat;
}

void main()
{
    BGV = (int idata *)0xef;
    UartInit();
    ES = 1;
    EA = 1;
    UARTsend(*BGV >> 8);        // Read the high byte of the Bandgap voltage
    UARTsend(*BGV);             // Read the low byte of the Bandgap voltage

    while (1);
}
```

8.3.3 Read the global unique ID number (Read from ROM)

assembly code

```
AUXR        DATA    8EH
ID          EQU     0FDF9H          ; STC8A8K64S4A10
;ID         EQU     0EFF9H          ; STC8A8K60S4A10
;ID         EQU     07FF9H          ; STC8A8K32S4A10
;ID         EQU     03FF9H          ; STC8A8K16S4A10

BUSY        BIT     20H.0

            ORG     0000H
            LJMP    MAIN
            ORG     0023H
            LJMP    UART_ISR

            ORG     0100H

UART_ISR:
            JNB     TI,CHKRI
            CLR     TI
            CLR     BUSY
CHKRI:
            JNB     RI,UARTISR_EXIT
            CLR     RI
UARTISR_EXIT:
```

```
        RETI

UART_INIT:
                MOV     SCON,#50H
                MOV     TMOD,#00H
                MOV     TL1,#0E8H               ;65536-11059200/115200/4=0FFE8H
                MOV     TH1,#0FFH
                SETB    TR1
                MOV     AUXR,#40H
                CLR     BUSY
        RET

UART_SEND:
                JB      BUSY,$
                SETB    BUSY
                MOV     SBUF,A
        RET

MAIN:
                MOV     SP,#3FH

                LCALL   UART_INIT
                SETB    ES
                SETB    EA

                MOV     DPTR,#ID
                MOV     R1,#7
NEXT:           CLR     A
                MOVC    A,@A+DPTR
                LCALL   UART_SEND
                INC     DPTR
                DJNZ    R1,NEXT

LOOP:
                JMP     LOOP

        END
```

C code

```
#include "reg51.h"
#include "intrins.h"

#define     FOSC            11059200UL
#define     BRT             (65536 - FOSC / 115200 / 4)

sfr         AUXR        =   0x8e;

bit         busy;
char        *ID;

void UartIsr() interrupt 4
{
    if (TI)
    {
        TI = 0;
```

```
            busy = 0;
        }
        if (RI)
        {
            RI = 0;
        }
}

void UartInit()
{
        SCON = 0x50;
        TMOD = 0x00;
        TL1 = BRT;
        TH1 = BRT >> 8;
        TR1 = 1;
        AUXR = 0x40;
        busy = 0;
}

void UARTsend(char dat)
{
        while (busy);
        busy = 1;
        SBUF = dat;
}

void main()
{
        char i;

        ID = (char code *)0xfdf9;          // STC8A8K64S4A10
//      ID = (char code *)0xeff9;          // STC8A8K60S4A10
//      ID = (char code *)0x7ff9;          // STC8A8K32S4A10
//      ID = (char code *)0x3ff9;          // STC8A8K16S4A10
        UartInit();
        ES = 1;
        EA = 1;

        for (i=0; i<7; i++)
        {
            UARTsend(ID[i]);
        }

        while (1);
}
```

8.3.4 Read the global unique ID number (Read from RAM)

assembly code

```
AUXR        DATA        8EH
ID          DATA        0F1H
```

```
BUSY        BIT     20H.0

            ORG     0000H
            LJMP    MAIN
            ORG     0023H
            LJMP    UART_ISR

            ORG     0100H

UART_ISR:
            JNB     TI,CHKRI
            CLR     TI
            CLR     BUSY
CHKRI:
            JNB     RI,UARTISR_EXIT
            CLR     RI
UARTISR_EXIT:
    RETI

UART_INIT:
            MOV     SCON,#50H
            MOV     TMOD,#00H
            MOV     TL1,#0E8H           ;65536-11059200/115200/4=0FFE8H
            MOV     TH1,#0FFH
            SETB    TR1
            MOV     AUXR,#40H
            CLR     BUSY
    RET

UART_SEND:
            JB      BUSY,$
            SETB    BUSY
            MOV     SBUF,A
    RET

MAIN:
            MOV     SP,#3FH

            LCALL   UART_INIT
            SETB    ES
            SETB    EA

            MOV     R0,#ID
            MOV     R1,#7
NEXT:       MOV     A,@R0
            LCALL   UART_SEND
            INC     R0
            DJNZ    R1,NEXT

LOOP:
            JMP     LOOP

    END
```

C code

```
#include "reg51.h"
#include "intrins.h"

#define     FOSC            11059200UL
#define     BRT             (65536 - FOSC / 115200 / 4)

sfr         AUXR        =   0x8e;

bit         busy;
char        *ID;

void UartIsr() interrupt 4
{
    if (TI)
    {
        TI = 0;
        busy = 0;
    }
    if (RI)
    {
        RI = 0;
    }
}

void UartInit()
{
    SCON = 0x50;
    TMOD = 0x00;
    TL1 = BRT;
    TH1 = BRT >> 8;
    TR1 = 1;
    AUXR = 0x40;
    busy = 0;
}

void UARTsend(char dat)
{
    while (busy);
    busy = 1;
    SBUF = dat;
}

void main()
{
    char i;

    ID = (char idata *)0xf1;
    UartInit();
    ES = 1;
    EA = 1;
```

STC MCU

```
    for (i=0; i<7; i++)
    {
        UARTsend(ID[i]);
    }

    while (1);
}
```

8.3.5 Read the frequency of the 32K power down wake-up timer (Read from ROM)

assembly code

```
AUXR        DATA    8EH
F32K        EQU     0FDF5H          ; STC8A8K64S4A10
;F32K       EQU     0EFF5H          ; STC8A8K60S4A10
;F32K       EQU     07FF5H          ; STC8A8K32S4A10
;F32K       EQU     03FF5H          ; STC8A8K16S4A10

BUSY        BIT     20H.0

            ORG     0000H
            LJMP    MAIN
            ORG     0023H
            LJMP    UART_ISR

            ORG     0100H

UART_ISR:
            JNB     TI,CHKRI
            CLR     TI
            CLR     BUSY
CHKRI:
            JNB     RI,UARTISR_EXIT
            CLR     RI
UARTISR_EXIT:
    RETI

UART_INIT:
            MOV     SCON,#50H
            MOV     TMOD,#00H
            MOV     TL1,#0E8H       ;65536-11059200/115200/4=0FFE8H
            MOV     TH1,#0FFH
            SETB    TR1
            MOV     AUXR,#40H
            CLR     BUSY
    RET

UART_SEND:
            JB      BUSY,$
            SETB    BUSY
            MOV     SBUF,A
    RET
```

```
MAIN:
        MOV     SP,#3FH

        LCALL   UART_INIT
        SETB    ES
        SETB    EA

        MOV     DPTR,#F32K
        CLR     A
        MOVC    A,@A+DPTR       ; Reading high bytes of the 32K frequency
        LCALL   UART_SEND
        INC     DPTR
        CLR     A
        MOVC    A,@A+DPTR       ; Reading lowh bytes of the 32K frequency
        LCALL   UART_SEND

LOOP:
        JMP     LOOP

    END
```

C code

```
#include "reg51.h"
#include "intrins.h"

#define     FOSC        11059200UL
#define     BRT         (65536 - FOSC / 115200 / 4)

sfr         AUXR    =   0x8e;

bit         busy;
int         *F32K;

void UartIsr() interrupt 4
{
    if (TI)
    {
        TI = 0;
        busy = 0;
    }
    if (RI)
    {
        RI = 0;
    }
}

void UartInit()
{
    SCON = 0x50;
    TMOD = 0x00;
    TL1 = BRT;
    TH1 = BRT >> 8;
    TR1 = 1;
```

```
    AUXR = 0x40;
    busy = 0;
}

void UARTsend(char dat)
{
    while (busy);
    busy = 1;
    SBUF = dat;
}

void main()
{
    F32K = (int code *)0xfdf5;          // STC8A8K64S4A10
//  F32K = (int code *)0xeff5;          // STC8A8K60S4A10
//  F32K = (int code *)0x7ff5;          // STC8A8K32S4A10
//  F32K = (int code *)0x3ff5;          // STC8A8K16S4A10
    UartInit();
    ES = 1;
    EA = 1;

    UARTsend(*F32K >> 8);               // Reading high bytes of the 32K frequency
    UARTsend(*F32K);                    // Reading low bytes of the 32K frequency

    while (1);
}
```

8.3.6 Read the frequency of the 32K power down wake-up timer (Read from RAM)

assembly code

```
AUXR        DATA    8EH
F32K        DATA    0F8H

BUSY        BIT     20H.0

            ORG     0000H
            LJMP    MAIN
            ORG     0023H
            LJMP    UART_ISR

            ORG     0100H

UART_ISR:
            JNB     TI,CHKRI
            CLR     TI
            CLR     BUSY
CHKRI:
            JNB     RI,UARTISR_EXIT
            CLR     RI
UARTISR_EXIT:
    RETI
```

```
UART_INIT:
            MOV     SCON,#50H
            MOV     TMOD,#00H
            MOV     TL1,#0E8H           ;65536-11059200/115200/4=0FFE8H
            MOV     TH1,#0FFH
            SETB    TR1
            MOV     AUXR,#40H
            CLR     BUSY
    RET

UART_SEND:
            JB      BUSY,$
            SETB    BUSY
            MOV     SBUF,A
    RET

MAIN:
            MOV     SP,#3FH

            LCALL   UART_INIT
            SETB    ES
            SETB    EA

            MOV     R0,#F32K
            MOV     A,@R0               ; Reading high bytes of the 32K frequency
            LCALL   UART_SEND
            INC     R0
            MOV     A,@R0               ; Reading low bytes of the 32K frequency
            LCALL   UART_SEND

LOOP:
            JMP     LOOP

    END
```

C code

```
#include "reg51.h"
#include "intrins.h"

#define     FOSC            11059200UL
#define     BRT             (65536 - FOSC / 115200 / 4)

sfr         AUXR        =   0x8e;

bit         busy;
int         *F32K;

void UartIsr() interrupt 4
{
    if (TI)
    {
        TI = 0;
        busy = 0;
    }
```

```
        if (RI)
        {
                RI = 0;
        }
}

void UartInit()
{
        SCON = 0x50;
        TMOD = 0x00;
        TL1 = BRT;
        TH1 = BRT >> 8;
        TR1 = 1;
        AUXR = 0x40;
        busy = 0;
}

void UARTsend(char dat)
{
        while (busy);
        busy = 1;
        SBUF = dat;
}

void main()
{
        F32K = (int idata *)0xf8;
        UartInit();
        ES = 1;
        EA = 1;

        UARTsend(*F32K >> 8);           //Reading high bytes of the 32K frequency
        UARTsend(*F32K);                // Reading low bytes of the 32K frequency

        while (1);
}
```

8.3.7 Manually set the internal IRC frequency (Read from ROM

assembly code

```
P_SW2       DATA    0BAH
CKSEL       EQU     0FE00H
CLKDIV      EQU     0FE01H

IRCCR       DATA    09FH

IRC22M      EQU     0FDF4H          ; STC8A8K64S4A10
IRC24M      EQU     0FDF3H
;IRC22M     EQU     0EFF4H          ; STC8A8K60S4A10
;IRC24M     EQU     0EFF3H
;IRC22M     EQU     07FF4H          ; STC8A8K32S4A10
;IRC24M     EQU     07FF3H
```

```
;IRC22M     EQU     03FF4H              ; STC8A8K16S4A10
;IRC24M     EQU     03FF3H

            ORG     0000H
            LJMP    MAIN

            ORG     0100H
MAIN:
            MOV     SP,#3FH

;           MOV     DPTR,#IRC22M        ; loading IRC parameters for 22.1184MHz
;           CLR     A
;           MOVC    A,@A+DPTR
;           MOV     IRCCR,A
            MOV     DPTR,#IRC24M        ; loading IRC parameters for 24MHz
            CLR     A
            MOVC    A,@A+DPTR
            MOV     IRCCR,A

            MOV     P_SW2,#80H
            MOV     A,#0                ; Master clock without prescale
            MOV     DPTR,#CLKDIV
            MOVX    @DPTR,A
            MOV     A,#40H              ; Master clock 4 frequency division output to P5.4 port
            MOV     DPTR,#CKSEL
            MOVX    @DPTR,A
            MOV     P_SW2,#00H

            JMP     $

    END
```

C code

```
#include "reg51.h"
#include "intrins.h"

#define     CKSEL       (*(unsigned char volatile xdata *)0xfe00)
#define     CLKDIV      (*(unsigned char volatile xdata *)0xfe01)

sfr         P_SW2       =   0xba;
sfr         IRCCR       =   0x9f;

char        *IRC22M;
char        *IRC24M;

void main()
{
    IRC22M = (char code *)0xfdf4;       // STC8A8K64S4A10
    IRC24M = (char code *) 0xfdf3;
//  IRC22M = (char code *)0xeff4;       // STC8A8K60S4A10
//  IRC24M = (char code *) 0xeff3;
//  IRC22M = (char code *)0x7ff4;       // STC8A8K32S4A10
//  IRC24M = (char code *) 0x7ff3;
//  IRC22M = (char code *)0x3ff4;       // STC8A8K16S4A10
//  IRC24M = (char code *) 0x3ff3;
```

```
//      IRCCR = *IRC22M;            // loading IRC parameters for 22.1184MHz
        IRCCR = *IRC24M;            // loading IRC parameters for 24MHz
        P_SW2 = 0x80;
        CLKDIV = 0;                 // Master clock without prescale
        CKSEL = 0x40;               //Master clock 4 frequency division output to P5.4 por
        P_SW2 = 0x00;

        while (1);
}
```

8.3.8 Manually set the internal IRC frequency(Read from RAM)

assembly code

```
P_SW2       DATA    0BAH
CKSEL       EQU     0FE00H
CLKDIV      EQU     0FE01H

IRCCR       DATA    09FH

IRC22M      DATA    0FAH
IRC24M      DATA    0FBH

            ORG     0000H
            LJMP    MAIN

            ORG     0100H
MAIN:
            MOV     SP,#3FH

;           MOV     R0,#IRC22M          ; loading IRC parameters for 22.1184MHz
;           MOV     IRCCR,@R0
            MOV     R0,#IRC24M          ; loading IRC parameters for 24MHz
            MOV     IRCCR,@R0

            MOV     P_SW2,#80H
            MOV     A,#0                ; Master clock without prescale
            MOV     DPTR,#CLKDIV
            MOVX    @DPTR,A
            MOV     A,#40H              ; Master clock 4 frequency division output to P5.4 port
            MOV     DPTR,#CKSEL
            MOVX    @DPTR,A
            MOV     P_SW2,#00H

            JMP     $

        END
```

C code

```
#include "reg51.h"
#include "intrins.h"

#define     CKSEL       (*(unsigned char volatile xdata *)0xfe00)
#define     CLKDIV      (*(unsigned char volatile xdata *)0xfe01)
```

```
sfr     P_SW2     =    0xba;
sfr     IRCCR     =    0x9f;

char    *IRC22M;
char    *IRC24M;

void main()
{
    IRC22M = (char idata *)0xfa;
    IRC24M = (char idata *) 0xfb;
//  IRCCR = *IRC22M;            // loading IRC parameters for 22.1184MHz
    IRCCR = *IRC24M;            // loading IRC parameters for 24MHz

    P_SW2 = 0x80;
    CLKDIV = 0;                 // Master clock without prescale
    CKSEL = 0x40;               // Master clock 4 frequency division output to P5.4 port
    P_SW2 = 0x00;

    while (1);
}
```

STC MCU

9 Special Function Register

9.1 Series of STC8A8K64S4A12

	0/8	1/9	2/A	3/B	4/C	5/D	6/E	7/F
F8H	P7	CH	CCAP0H	CCAP1H	CCAP2H	CCAP3H	PWMCR	RSTCFG
F0H	B	PWMCFG	PCA_PWM0	PCA_PWM1	PCA_PWM2	PCA_PWM3	PWMIF	PWMFDCR
E8H	P6	CL	CCAP0L	CCAP1L	CCAP2L	CCAP3L	~~IP3H~~	AUXINTIF
E0H	ACC	P7M1	P7M0	DPS	DPL1	DPH1	CMPCR1	CMPCR2
D8H	CCON	CMOD	CCAPM0	CCAPM1	CCAPM2	CCAPM3	ADCCFG	~~IP3~~
D0H	PSW	T4T3M	T4H	T4L	T3H	T3L	T2H	T2L
C8H	P5	P5M1	P5M0	P6M1	P6M0	SPSTAT	SPCTL	SPDAT
C0H	P4	WDT_CONTR	IAP_DATA	IAP_ADDRH	IAP_ADDRL	IAP_CMD	IAP_TRIG	IAP_CONTR
B8H	IP	SADEN	P_SW2	VOCTRL	ADC_CONTR	ADC_RES	ADC_RESL	~~ADC_RESH~~
B0H	P3	P3M1	P3M0	P4M1	P4M0	IP2	IP2H	IPH
A8H	IE	SADDR	WKTCL	WKTCH	S3CON	S3BUF	TA	IE2
A0H	P2	BUS_SPEED	P_SW1	Reserved				Reserved
98H	SCON	SBUF	S2CON	S2BUF	Reserved		Reserved	Reserved
90H	P1	P1M1	P1M0	P0M1	P0M0	P2M1	P2M0	AUXR2
88H	TCON	TMOD	TL0	TL1	TH0	TH1	AUXR	INTCLKO
80H	P0	SP	DPL	DPH	S4CON	S4BUF		PCON

	0/8	1/9	2/A	3/B	4/C	5/D	6/E	7/F
FFF0H	PWMCH	PWMCL	PWMCKS	TADCPH	TADCPL			
FF70H	PWM7T1H	PWM7T1L	PWM7T2H	PWM7T2L	PWM7CR	PWM7HLD		
FF60H	PWM6T1H	PWM6T1L	PWM6T2H	PWM6T2L	PWM6CR	PWM6HLD		
FF50H	PWM5T1H	PWM5T1L	PWM5T2H	PWM5T2L	PWM5CR	PWM5HLD		
FF40H	PWM4T1H	PWM4T1L	PWM4T2H	PWM4T2L	PWM4CR	PWM4HLD		
FF30H	PWM3T1H	PWM3T1L	PWM3T2H	PWM3T2L	PWM3CR	PWM3HLD		
FF20H	PWM2T1H	PWM2T1L	PWM2T2H	PWM2T2L	PWM2CR	PWM2HLD		
FF10H	PWM1T1H	PWM1T1L	PWM1T2H	PWM1T2L	PWM1CR	PWM1HLD		
FF00H	PWM0T1H	PWM0T1L	PWM0T2H	PWM0T2L	PWM0CR	PWM0HLD		
FE80H	I2CCFG	I2CMSCR	I2CMSST	I2CSLCR	I2CSLST	I2CSLADR	I2CTxD	I2CRxD
FE18H	P0NCS	P1NCS	P2NCS	P3NCS	P4NCS	P5NCS	P6NCS	P7NCS
FE10H	P0PU	P1PU	P2PU	P3PU	P4PU	P5PU	P6PU	P7PU
FE00H	CKSEL	CLKDIV	IRC24MCR	XOSCCR	IRC32KCR			

STCMCU

9.2 Series of STC8A4K64S2A12

	0/8	1/9	2/A	3/B	4/C	5/D	6/E	7/F
F8H	P7	CH	CCAP0H	CCAP1H	CCAP2H	CCAP3H	PWMCR	RSTCFG
F0H	B	PWMCFG	PCA_PWM0	PCA_PWM1	PCA_PWM2	PCA_PWM3	PWMIF	PWMFDCR
E8H	P6	CL	CCAP0L	CCAP1L	CCAP2L	CCAP3L	~~IP3H~~	AUXINTIF
E0H	ACC	P7M1	P7M0	DPS	DPL1	DPH1	CMPCR1	CMPCR2
D8H	CCON	CMOD	CCAPM0	CCAPM1	CCAPM2	CCAPM3	ADCCFG	~~IP3~~
D0H	PSW	T4T3M	T4H	T4L	T3H	T3L	T2H	T2L
C8H	P5	P5M1	P5M0	P6M1	P6M0	SPSTAT	SPCTL	SPDAT
C0H	P4	WDT_CONTR	IAP_DATA	IAP_ADDRH	IAP_ADDRL	IAP_CMD	IAP_TRIG	IAP_CONTR
B8H	IP	SADEN	P_SW2	VOCTRL	ADC_CONTR	ADC_RES	ADC_RESL	~~ADC_RESH~~
B0H	P3	P3M1	P3M0	P4M1	P4M0	IP2	IP2H	IPH
A8H	IE	SADDR	WKTCL	WKTCH			TA	IE2
A0H	P2	BUS_SPEED	P_SW1	Reserved				Reserved
98H	SCON	SBUF	S2CON	S2BUF	Reserved		Reserved	Reserved
90H	P1	P1M1	P1M0	P0M1	P0M0	P2M1	P2M0	AUXR2
88H	TCON	TMOD	TL0	TL1	TH0	TH1	AUXR	INTCLKO
80H	P0	SP	DPL	DPH				PCON

	0/8	1/9	2/A	3/B	4/C	5/D	6/E	7/F
FFF0H	PWMCH	PWMCL	PWMCKS	TADCPH	TADCPL			
FF70H	PWM7T1H	PWM7T1L	PWM7T2H	PWM7T2L	PWM7CR	PWM7HLD		
FF60H	PWM6T1H	PWM6T1L	PWM6T2H	PWM6T2L	PWM6CR	PWM6HLD		
FF50H	PWM5T1H	PWM5T1L	PWM5T2H	PWM5T2L	PWM5CR	PWM5HLD		
FF40H	PWM4T1H	PWM4T1L	PWM4T2H	PWM4T2L	PWM4CR	PWM4HLD		
FF30H	PWM3T1H	PWM3T1L	PWM3T2H	PWM3T2L	PWM3CR	PWM3HLD		
FF20H	PWM2T1H	PWM2T1L	PWM2T2H	PWM2T2L	PWM2CR	PWM2HLD		
FF10H	PWM1T1H	PWM1T1L	PWM1T2H	PWM1T2L	PWM1CR	PWM1HLD		
FF00H	PWM0T1H	PWM0T1L	PWM0T2H	PWM0T2L	PWM0CR	PWM0HLD		
FE80H	I2CCFG	I2CMSCR	I2CMSST	I2CSLCR	I2CSLST	I2CSLADR	I2CTxD	I2CRxD
FE18H	P0NCS	P1NCS	P2NCS	P3NCS	P4NCS	P5NCS	P6NCS	P7NCS
FE10H	P0PU	P1PU	P2PU	P3PU	P4PU	P5PU	P6PU	P7PU
FE00H	CKSEL	CLKDIV	IRC24MCR	XOSCCR	IRC32KCR			

9.3 Series of STC8F2K64S4

	0/8	1/9	2/A	3/B	4/C	5/D	6/E	7/F
F8H	P7							RSTCFG
F0H	B	PWMCFG						
E8H	P6						~~IP3H~~	AUXINTIF
E0H	ACC	P7M1	P7M0	DPS	DPL1	DPH1	CMPCR1	CMPCR2
D8H								~~IP3~~
D0H	PSW	T4T3M	T4H	T4L	T3H	T3L	T2H	T2L
C8H	P5	P5M1	P5M0	P6M1	P6M0	SPSTAT	SPCTL	SPDAT
C0H	P4	WDT_CONTR	IAP_DATA	IAP_ADDRH	IAP_ADDRL	IAP_CMD	IAP_TRIG	IAP_CONTR
B8H	IP	SADEN	P_SW2	VOCTRL				
B0H	P3	P3M1	P3M0	P4M1	P4M0	IP2	IP2H	IPH
A8H	IE	SADDR	WKTCL	WKTCH	S3CON	S3BUF	TA	IE2
A0H	P2	BUS_SPEED	P_SW1	Reserved				Reserved
98H	SCON	SBUF	S2CON	S2BUF	Reserved		Reserved	Reserved
90H	P1	P1M1	P1M0	P0M1	P0M0	P2M1	P2M0	AUXR2
88H	TCON	TMOD	TL0	TL1	TH0	TH1	AUXR	INTCLKO
80H	P0	SP	DPL	DPH	S4CON	S4BUF		PCON

	0/8	1/9	2/A	3/B	4/C	5/D	6/E	7/F
FE80H	I2CCFG	I2CMSCR	I2CMSST	I2CSLCR	I2CSLST	I2CSLADR	I2CTxD	I2CRxD
FE18H	P0NCS	P1NCS	P2NCS	P3NCS	P4NCS	P5NCS	P6NCS	P7NCS
FE10H	P0PU	P1PU	P2PU	P3PU	P4PU	P5PU	P6PU	P7PU
FE00H	CKSEL	CLKDIV	IRC24MCR	XOSCCR	IRC32KCR			

STCMCU

9.4 Series of STC8F2K64S2

	0/8	1/9	2/A	3/B	4/C	5/D	6/E	7/F
F8H	P7							RSTCFG
F0H	B	PWMCFG						
E8H	P6						~~IP3H~~	AUXINTIF
E0H	ACC	P7M1	P7M0	DPS	DPL1	DPH1	CMPCR1	CMPCR2
D8H								~~IP3~~
D0H	PSW	T4T3M	T4H	T4L	T3H	T3L	T2H	T2L
C8H	P5	P5M1	P5M0	P6M1	P6M0	SPSTAT	SPCTL	SPDAT
C0H	P4	WDT_CONTR	IAP_DATA	IAP_ADDRH	IAP_ADDRL	IAP_CMD	IAP_TRIG	IAP_CONTR
B8H	IP	SADEN	P_SW2	VOCTRL				
B0H	P3	P3M1	P3M0	P4M1	P4M0	IP2	IP2H	IPH
A8H	IE	SADDR	WKTCL	WKTCH			TA	IE2
A0H	P2	BUS_SPEED	P_SW1	Reserved				Reserved
98H	SCON	SBUF	S2CON	S2BUF	Reserved		Reserved	Reserved
90H	P1	P1M1	P1M0	P0M1	P0M0	P2M1	P2M0	AUXR2
88H	TCON	TMOD	TL0	TL1	TH0	TH1	AUXR	INTCLKO
80H	P0	SP	DPL	DPH				PCON

	0/8	1/9	2/A	3/B	4/C	5/D	6/E	7/F
FE80H	I2CCFG	I2CMSCR	I2CMSST	I2CSLCR	I2CSLST	I2CSLADR	I2CTxD	I2CRxD
FE18H	P0NCS	P1NCS	P2NCS	P3NCS	P4NCS	P5NCS	P6NCS	P7NCS
FE10H	P0PU	P1PU	P2PU	P3PU	P4PU	P5PU	P6PU	P7PU
FE00H	CKSEL	CLKDIV	IRC24MCR	XOSCCR	IRC32KCR			

STCMCU

9.5 List of Special Function Registers

Symbol	description	address	Bit address and symbol								reset value
			B7	B6	B5	B4	B3	B2	B1	B0	
P0	P0 port	80H									1111,1111
SP	Stack pointer	81H									0000,0111
DPL	Data pointer (low byte)	82H									0000,0000
DPH	Data pointer (high byte))	83H									0000,0000
S4CON	Serial port 4 control register	84H	S4SM0	S4ST4	S4SM2	S4REN	S4TB8	S4RB8	S4TI	S4RI	0000,0000
S4BUF	Serial port 4 data register	85H									0000,0000
PCON	Power control register	87H	SMOD	SMOD0	LVDF	POF	GF1	GF0	PD	IDL	0011,0000
TCON	Timer control register	88H	TF1	TR1	TF0	TR0	IE1	IT1	IE0	IT0	0000,0000
TMOD	Timer mode register	89H	GATE	C/T	M1	M0	GATE	C/T	M1	M0	0000,0000
TL0	Timer 0 low 8 bit register	8AH									0000,0000
TL1	Timer 1 low 8 bit register	8BH									0000,0000
TH0	Timer 0 high 8 bit register	8CH									0000,0000
TH1	Timer 1 high 8 bit register	8DH									0000,0000
AUXR	Auxiliary register 1	8EH	T0x12	T1x12	UART_M0x6	T2R	T2_C/T	T2x12	EXTRAM	S1ST2	0000,0001
INTCLKO	Interrupt and clock output control register	8FH	-	EX4	EX3	EX2	-	T2CLKO	T1CLKO	T0CLKO	x000,x000
P1	P1 port	90H									1111,1111
P1M1	P1port configuration register 1	91H									0000,0000
P1M0	P1 port configuration register 0	92H									0000,0000
P0M1	P0 port configuration register 1	93H									0000,0000
P0M0	P0 port configuration register 0	94H									0000,0000
P2M1	P2 port configuration register 1	95H									0000,0000
P2M0	P2 port configuration register 0	96H									0000,0000
AUXR2	Auxiliary register 2	97H	-	-	-	TXLNRX	-	-	-	-	xxxn,xxxx
SCON	Serial port 1 control register	98H	SM0/FE	SM1	SM2	REN	TB8	RB8	TI	RI	0000,0000
SBUF	Serial port 1 data register	99H									0000,0000
S2CON	Serial port 2 control register	9AH	S2SM0	-	S2SM2	S2REN	S2TB8	S2RB8	S2TI	S2RI	0100,0000
S2BUF	Serial port 2 data register	9BH									0000,0000
P2	P2 port	A0H									1111,1111
BUS_SPEED	Bus speed control register	A1H	RW_S[1:0]						SPEED[1:0]		00xx,xx00
P_SW1	Peripheral port switching register 1	A2H	S1_S[1:0]		CCP_S[1:0]		SPI_S[1:0]		0	-	nn00,000x
IE	interrupt enable register	A8H	EA	ELVD	EADC	ES	ET1	EX1	ET0	EX0	0000,0000
SADDR	Serial port 1slave address register	A9H									0000,0000
WKTCL	Power down wake-up timer low byte	AAH									1111,1111
WKTCH	Power down wake-up timer high byte	ABH	WKTEN								0111,1111

STC MCU

S3CON	Serial port 3 control register	ACH	S3SM0	S3ST3	S3SM2	S3REN	S3TB8	S3RB8	S3TI	S3RI	0000,0000
S3BUF	Serial port 3 data register	ADH									0000,0000
TA	DPTR timing control register	AEH									0000,0000
IE2	interrupt enable register2	AFH	~~ECAN~~	ET4	ET3	ES4	ES3	ET2	ESPI	ES2	x000,0000
P3	P3port	B0H									1111,1111
P3M1	P3 port configuration register 1	B1H									n000,0000
P3M0	P3 port configuration register 0	B2H									n000,0000
P4M1	P4 port configuration register 1	B3H									0000,0000
P4M0	P4 port configuration register 0	B4H									0000,0000
IP2	Interrupt priority control register 2	B5H	~~PCAN~~	PI2C	PCMP	PX4	PPWMFD	PPWM	PSPI	PS2	x000,0000
IP2H	High Interrupt priority control register 2	B6H	~~PCANH~~	PI2CH	PCMPH	PX4H	PPWMFDH	PPWMH	PSPIH	PS2H	x000,0000
IPH	High Interrupt priority control register	B7H	PPCAH	PLVDH	PADCH	PSH	PT1H	PX1H	PT0H	PX0H	0000,0000
IP	Interrupt priority control register	B8H	PPCA	PLVD	PADC	PS	PT1	PX1	PT0	PX0	0000,0000
SADEN	Serial port 1slave address shielded registe	B9H									0000,0000
P_SW2	Peripheral port switching register 2	BAH	EAXFR	~~CAN_S~~	I2C_S[1:0]		CMPO_S	S4_S	S3_S	S2_S	0x00,0000
VOCTRL	Voltage control register	BBH	SCC	-	-	-	-	-	0	0	0xxx,xx00
ADC_CONTR	ADC control register	BCH	ADC_POWER	ADC_START	ADC_FLAG	-	ADC_CHS[3:0]				000x,0000
ADC_RES	ADC conversion result high register	BDH									0000,0000
ADC_RESL	ADC conversion result low register	BEH									0000,0000
P4	P4 port	C0H	P4[7:0]								1111,1111
P4	P4 port **Note: there is no P45~P47 in the STC8A series**	C0H	-	-	-	P4[4:0]					1111,1111
WDT_CONTR	Watchdog control register	C1H	WDT_FLAG	-	EN_WDT	CLR_WDT	IDL_WDT	WDT_PS[2:0]			0x00,0000
IAP_DATA	IAP data register	C2H									1111,1111
IAP_ADDRH	IAP high address register	C3H									0000,0000
IAP_ADDRL	IAP low address register	C4H									0000,0000
IAP_CMD	IAP command register	C5H	-	-	-	-	-	-	CMD[1:0]		xxxx,xx00
IAP_TRIG	IAP trigger register	C6H									0000,0000
IAP_CONTR	IAP control register	C7H	IAPEN	SWBS	SWRST	CMD_FAIL	-	IAP_WT[2:0]			0000,x000
P5	P5 port	C8H	-	-							xx11,1111
P5M1	P5 port configuration register 1	C9H	-	-							xx11,1111
P5M0	P5 port configuration register 0	CAH	-	-							xx11,1111
P6M1	P6 port configuration register 1	CBH									0000,0000
P6M0	P6 port configuration register 0	CCH									0000,0000

STC MCU

SPSTAT	SPI state register	CDH	SPIF	WCOL	-	-	-	-	-	-	00xx,xxxx
SPCTL	SPI control register	CEH	SSIG	SPEN	DORD	MSTR	CPOL	CPHA	SPR[1:0]		0000,0100
SPDAT	SPI data register	CFH									0000,0000
PSW	Program status word register	D0H	CY	AC	F0	RS1	RS0	OV	-	P	0000,00x0
T4T3M	Timer 4/3 control register	D1H	T4R	T4_C/T	T4x12	T4CLKO	T3R	T3_C/T	T3x12	T3CLKO	0000,0000
T4H	Timer 4 high byte	D2H									0000,0000
T4L	Timer 4 low byte	D3H									0000,0000
T3H	Timer 3 high byte	D4H									0000,0000
T3L	Timer 3 low byte	D5H									0000,0000
T2H	Timer 2 high byte	D6H									0000,0000
T2L	Timer 2 low byte	D7H									0000,0000
CCON	PCA control register	D8H	CF	CR	-	-	CCF3	CCF2	CCF1	CCF0	00xx,0000
CMOD	PCA mode control register	D9H	CIDL	-	-	-	CPS[2:0]			ECF	0xxx,0000
CCAPM0	PCA module0 mode control register	DAH	-	ECOM0	CCAPP0	CCAPN0	MAT0	TOG0	PWM0	ECCF0	x000,0000
CCAPM1	PCA module1 mode control register	DBH	-	ECOM1	CCAPP1	CCAPN1	MAT1	TOG1	PWM1	ECCF1	x000,0000
CCAPM2	PCA module2 mode control register	DCH	-	ECOM2	CCAPP2	CCAPN2	MAT2	TOG2	PWM2	ECCF2	x000,0000
CCAPM3	PCA module3 mode control register	DDH	-	ECOM3	CCAPP3	CCAPN3	MAT3	TOG3	PWM3	ECCF3	x000,0000
~~IP3~~		~~DFH~~	~~-~~	~~-~~	~~-~~	~~-~~	~~-~~	~~-~~	~~PS4~~	~~PS3~~	~~xxxx,xx00~~
ADCCFG	ADC configuration register	DEH	-	-	RESFMT	-	SPEED[3:0]				xx0x,0000
ACC	Accumulator	E0H									0000,0000
P7M1	P7 port configuration register 1	E1H									0000,0000
P7M0	P7 port configuration register 0	E2H									0000,0000
DPS	pointer selector	E3H	ID1	ID0	TSL	AU1	AU0	-	-	SEL	0000,0xx0
DPL1	Second sets of data pointers(low byte)	E4H									0000,0000
DPH1	Second sets of data pointers high byte)	E5H									0000,0000
CMPCR1	Comparator control register 1	E6H	CMPEN	CMPIF	PIE	NIE	PIS	NIS	CMPOE	CMPRES	0000,0000
CMPCR2	Comparator control register 2	E7H	INVCMPO	DISFLT	LCDTY[5:0]						0000,0000
P6	P6 port	E8H									1111,1111
CL	PCA counter low byte	E9H									0000,0000
CCAP0L	PCA module0 low byte	EAH									0000,0000
CCAP1L	PCA module1 low byte	EBH									0000,0000
CCAP2L	PCA module2 low byte	ECH									0000,0000
CCAP3L	PCA module3 low byte	EDH									0000,0000
~~IP3H~~	~~High interrupt priority control register 3~~	~~EEH~~	~~-~~	~~-~~	~~-~~	~~-~~	~~-~~	~~-~~	~~PS4H~~	~~PS3H~~	~~xxxx,xx00~~
AUXINTIF	Extended external interrupt flag register	EFH	-	INT4IF	INT3IF	INT2IF	-	T4IF	T3IF	T2IF	x000,x000

B	B register	F0H									0000,0000
PWMCFG	Enhanced PWM configuration register	F1H	CBIF	ETADC	-	-	-	-	-	-	00xx,xxxx
PCA_PWM0	PCA0 's PWM mode register	F2H	EBS0[1:0]		XCCAP0H[1:0]		XCCAP0L[1:0]		EPC0H	EPC0L	0000,0000
PCA_PWM1	PCA1 's PWM mode registe	F3H	EBS1[1:0]		XCCAP1H[1:0]		XCCAP1L[1:0]		EPC1H	EPC1L	0000,0000
PCA_PWM2	PCA2 's PWM mode registe	F4H	EBS2[1:0]		XCCAP2H[1:0]		XCCAP2L[1:0]		EPC2H	EPC2L	0000,0000
PCA_PWM3	PCA3 's PWM mode registe	F5H	EBS3[1:0]		XCCAP3H[1:0]		XCCAP3L[1:0]		EPC3H	EPC3L	0000,0000
PWMIF	Enhanced PWM interrupt flag register	F6H	C7IF	C6IF	C5IF	C4IF	C3IF	C2IF	C1IF	C0IF	0000,0000
PWMFDCR	PWM exception detection control register	F7H	INVCMP	INVIO	ENFD	FLTFLIO	EFDI	FDCMP	FDIO	FDIF	0000,0000
P7	P7port	F8H									1111,1111
CH	PCA counter high byte	F9H									0000,0000
CCAP0H	PCA module0 high byte	FAH									0000,0000
CCAP1H	PCA module1 high byte	FBH									0000,0000
CCAP2H	PCA module 2 high byte	FCH									0000,0000
CCAP3H	PCA module 3 high byte	FDH									0000,0000
PWMCR	PWM control register	FEH	ENPWM	ECBI	-	-	-	-	-	-	00xx,xxxx
RSTCFG	Reset configuration register	FFH	-	ENLVR	-	P54RST	-	-	LVDS[1:0]		0000,0000

The following special function registers are expanded SFR and logical address is located in the XDATA area. Before accessing, the P_SW2 (BAH) register's highest position (EAXFR) is placed to 1. Then MOVX A, @DPTR and MOVX @DPTR, A instruction are used to access.

Symbol	Discription	Address	Bit of address and symbol								Reset value
			B7	B6	B5	B4	B3	B2	B1	B0	
PWMCH	PWM counter high byte	FFF0H	-								x000,0000
PWMCL	PWM counter low byte	FFF1H									0000,0000
PWMCKS	PWM clock selection	FFF2H	-	-	-	SELT2	PWM_PS[3:0]				xxx0,0000
TADCPH	触发 ADC count value high byte	FFF3H	-								x000,0000
TADCPL	触发 ADC count value byte	FFF4H									0000,0000
PWM0T1H	PWM0T1 count value high byte	FF00H	-								x000,0000
PWM0T1L	PWM0T1 count value low byte	FF01H									0000,0000
PWM0T2H	PWM0T2 count value high byte	FF02H	-								x000,0000
PWM0T2L	PWM0T2 count value low byte	FF03H									0000,0000
PWM0CR	PWM0 control register	FF04H	ENC0O	C0INI	-	C0_S[1:0]		EC0I	EC0T2SI	EC0T1SI	00x0,0000
PWM0HLD	PWM0 level hold control register	FF05H	-	-	-	-	-	-	HC0H	HC0L	xxxx,xx00
PWM1T1H	PWM1T1 count value high byte	FF10H	-								x000,0000
PWM1T1L	PWM1T1 count value low byte	FF11H									0000,0000
PWM1T2H	PWM1T2 count value high byte	FF12H	-								x000,0000
PWM1T2L	PWM1T2 count value low byte	FF13H									0000,0000
PWM1CR	PWM1 control register	FF14H	ENC1O	C1INI	-	C1_S[1:0]		EC1I	EC1T2SI	EC1T1SI	00x0,0000

PWM1HLD	PWM1 level hold control register	FF15H	-	-	-	-	-	-	HC1H	HC1L	xxxx,xx00
PWM2T1H	PWM2T1 count value high byte	FF20H	-								x000,0000
PWM2T1L	PWM2T1 count value low byte	FF21H									0000,0000
PWM2T2H	PWM2T2 count value high byte	FF22H	-								x000,0000
PWM2T2L	PWM2T2 count value low byte	FF23H									0000,0000
PWM2CR	PWM2 control register	FF24H	ENC2O	C2INI	-	C2_S[1:0]		EC2I	EC2T2SI	EC2T1SI	00x0,0000
PWM2HLD	PWM2 level hold control register	FF25H	-	-	-	-	-	-	HC2H	HC2L	xxxx,xx00
PWM3T1H	PWM3T1 count value high byte	FF30H	-								x000,0000
PWM3T1L	PWM3T1 count value low byte	FF31H									0000,0000
PWM3T2H	PWM3T2 count value high byte	FF32H	-								x000,0000
PWM3T2L	PWM3T2 count value low byte	FF33H									0000,0000
PWM3CR	PWM3 control register	FF34H	ENC3O	C3INI	-	C3_S[1:0]		EC3I	EC3T2SI	EC3T1SI	00x0,0000
PWM3HLD	PWM3 level hold control register	FF35H	-	-	-	-	-	-	HC3H	HC3L	xxxx,xx00
PWM4T1H	PWM4T1 count value high byte	FF40H	-								x000,0000
PWM4T1L	PWM4T1 count value low byte	FF41H									0000,0000
PWM4T2H	PWM4T2 count value high byte	FF42H	-								x000,0000
PWM4T2L	PWM4T2 count value low byte	FF43H									0000,0000
PWM4CR	PWM4 control register	FF44H	ENC4O	C4INI	-	C4_S[1:0]		EC4I	EC4T2SI	EC4T1SI	00x0,0000
PWM4HLD	PWM4 level hold control register	FF45H	-	-	-	-	-	-	HC4H	HC4L	xxxx,xx00
PWM5T1H	PWM5T1 count value high byte	FF50H	-								x000,0000
PWM5T1L	PWM5T1 count value low byte	FF51H									0000,0000
PWM5T2H	PWM5T2 count value high byte	FF52H	-								x000,0000
PWM5T2L	PWM5T2 count value low byte	FF53H									0000,0000
PWM5CR	PWM5 control register	FF54H	ENC5O	C5INI	-	C5_S[1:0]		EC5I	EC5T2SI	EC5T1SI	00x0,0000
PWM5HLD	PWM5 level hold control register	FF55H	-	-	-	-	-	-	HC5H	HC5L	xxxx,xx00
PWM6T1H	PWM6T1 count value high byte	FF60H	-								x000,0000
PWM6T1L	PWM6T1 count value low byte	FF61H									0000,0000
PWM6T2H	PWM6T2 count value high byte	FF62H	-								x000,0000
PWM6T2L	PWM6T2 count value low byte	FF63H									0000,0000
PWM6CR	PWM6 control register	FF64H	ENC6O	C6INI	-	C6_S[1:0]		EC6I	EC6T2SI	EC6T1SI	00x0,0000
PWM6HLD	PWM6 level hold control register	FF65H	-	-	-	-	-	-	HC6H	HC6L	xxxx,xx00
PWM7T1H	PWM7T1 count value high byte	FF70H	-								x000,0000
PWM7T1L	PWM7T1 count value low byte	FF71H									0000,0000
PWM7T2H	PWM7T2 count value high byte	FF72H	-								x000,0000
PWM7T2L	PWM7T2 数值低节	FF73H									0000,0000
PWM7CR	PWM7 control register	FF74H	ENC7O	C7INI	-	C7_S[1:0]		EC7I	EC7T2SI	EC7T1SI	00x0,0000
PWM7HLD	PWM7 level hold	FF75H	-	-	-	-	-	-	HC7H	HC7L	xxxx,xx00

STC MCU

	control register										
I2CCFG	I^2C configuration register	FE80H	ENI2C	MSSL	MSSPEED[6:1]						0000,0000
I2CMSCR	I^2C host control register	FE81H	EMSI	-	-	-	MSCMD[3:0]				0xxx,0000
I2CMSST	I2C host state register	FE82H	MSBUSY	MSIF	-	-	-	-	MSACKI	MSACKO	00xx,xx00
I2CSLCR	I^2C slave control register	FE83H	-	ESTAI	ERXI	ETXI	ESTOI	-	-	SLRST	x000,0xx0
I2CSLST	I^2C slave state register	FE84H	SLBUSY	STAIF	RXIF	TXIF	STOIF	TXING	SLACKI	SLACKO	0000,0000
I2CSLADR	I2C slave address register	FE85H	SLADR[6:0]							MA	0000,0000
I2CTXD	I^2C data transmission register	FE86H									0000,0000
I2CRXD	I^2C data receiving register	FE87H									0000,0000
I2CMSAUX	I2C host auxiliary control register	FE88H	-	-	-	-	-	-	-	WDTA	xxxx,xxx0
P0PU	P0 port pull-up resistance control register	FE10H									0000,0000
P1PU	P1 port pull-up resistance control register	FE11H									0000,0000
P2PU	P2 port pull-up resistance control register	FE12H									0000,0000
P3PU	P3 port pull-up resistance control register	FE13H									0000,0000
P4PU	P4 port pull-up resistance control register	FE14H									0000,0000
P5PU	P5 port pull-up resistance control register	FE15H									0000,0000
P6PU	P6 port pull-up resistance control register	FE16H									0000,0000
P7PU	P7 port pull-up resistance control register	FE17H									0000,0000
P0NCS	P0 port Schmidt trigger control register	FE18H									0000,0000
P1NCS	P1 port Schmidt trigger control register	FE19H									0000,0000
P2NCS	P2 port Schmidt trigger control register	FE1AH									0000,0000
P3NCS	P3 port Schmidt trigger control register	FE1BH									0000,0000
P4NCS	P4 port Schmidt trigger control register	FE1CH									0000,0000
P5NCS	P5 port Schmidt trigger control register	FE1DH									0000,0000
P6NCS	P6 port Schmidt trigger control register	FE1EH									0000,0000
P7NCS	P7 port Schmidt trigger control register	FE1FH									0000,0000

STC MCU

CKSEL	Clock selection register	FE00H	MCLKODIV[3:0]				MCLKO_S	-	MCKSEL[1:0]		0000,0000
CLKDIV	Clock frequency division register	FE01H									0000,0100
IRC24MCR	Internal 24M oscillator control register	FE02H	ENIRC24M	-	-	-	-	-	-	IRC24MST	1xxx,xxx0
XOSCCR	External oscillator control register	FE03H	ENXOSC	XITYPE	-	-	-	-	-	XOSCST	00xx,xxx0
IRC32KCR	Internal 32K oscillator control register	FE04H	ENIRC32K	-	-	-	-	-	-	IRC32KST	0xxx,xxx0

STC MCU

10 I/O Ports

There are not more than 59 I/O ports in STC8 microcontrollers family.There are 4 modes for all GPIOs: quasi bidirectional or weak pull-up mode (standard 8051 output mode), push-pull output / strong pull-up mode, high-impedance input mode (where current can neither flow in nor out), open drain mode. It is easy to configure the I/O mode by software.

10.1 I/O port related registers

Symbol	Description	Address	Bit Address and Symbol								Value after reset
			B7	B6	B5	B4	B3	B2	B1	B0	
P0	Port 0	80H									1111,1111
P1	Port1	90H									1111,1111
P2	Port2	A0H									1111,1111
P3	Port3	B0H									1111,1111
P4	Port4	C0H									1111,1111
P5	Port5	C8H	-	-							xx11,1111
P6	Port6	E8H									1111,1111
P7	Port7	F8H									1111,1111
P0M1	Port 0 mode register 1	93H									0000,0000
P0M0	Port 0 mode register 0	94H									0000,0000
P1M1	Port 1 mode register 1	91H									0000,0000
P1M0	Port 1 mode register 0	92H									0000,0000
P2M1	Port 2 mode register 1	95H									0000,0000
P2M0	Port 2 mode register 0	96H									0000,0000
P3M1	Port 3 mode register 1	B1H									n000,0000
P3M0	Port 3 mode register 0	B2H									n000,0000
P4M1	Port 4 mode register 1	B3H									0000,0000
P4M0	Port 4 mode register 0	B4H									0000,0000
P5M1	Port 5 mode register 1	C9H	-	-							xx11,1111
P5M0	Port 5 mode register 0	CAH	-	-							xx11,1111
P6M1	Port 6 mode register 1	CBH									0000,0000
P6M0	Port 6 mode register 0	CCH									0000,0000
P7M1	Port 7 mode register 1	E1H									0000,0000
P7M0	Port 7 mode register 0	E2H									0000,0000
P0PU	Port 0 register which is control the pull-up resistor	FE10H									0000,0000
P1PU	Port 1 register which is control	FE11H									0000,0000

	the pull-up resistor		
P2PU	Port2 register which is control the pull-up resistor	FE12H	0000,0000
P3PU	Port 3 register which is control the pull-up resistor	FE13H	0000,0000
P4PU	Port 4 register which is control the pull-up resistor	FE14H	0000,0000
P5PU	Port 5 register which is control the pull-up resistor	FE15H	0000,0000
P6PU	Port 6 register which is control the pull-up resistor	FE16H	0000,0000
P7PU	Port 7 register which is control the pull-up resistor	FE17H	0000,0000
P0NCS	Port 0 register which is control the Schmidt trigger	FE18H	0000,0000
P1NCS	Port 1 register which is control the Schmidt trigger	FE19H	0000,0000
P2NCS	Port 2 register which is control the Schmidt trigger	FE1AH	0000,0000
P3NCS	Port 3 register which is control the Schmidt trigger	FE1BH	0000,0000
P4NCS	Port 4 register which is control the Schmidt trigger	FE1CH	0000,0000
P5NCS	Port 5 register which is control the Schmidt trigger	FE1DH	0000,0000
P6NCS	Port 6 register which is control the Schmidt trigger	FE1EH	0000,0000
P7NCS	Port 7 register which is control the Schmidt trigger	FE1FH	0000,0000

Registers related to date of the ports

Symbol	Address	B7	B6	B5	B4	B3	B2	B1	B0
P0	80H	P0.7	P0.6	P0.5	P0.4	P0.3	P0.2	P0.1	P0.0
P1	90H	P1.7	P1.6	P1.5	P1.4	P1.3	P1.2	P1.1	P1.0
P2	A0H	P2.7	P2.6	P2.5	P2.4	P2.3	P2.2	P2.1	P2.0
P3	B0H	P3.7	P3.6	P3.5	P3.4	P3.3	P3.2	P3.1	P3.0
P4	C0H	P4.7	P4.6	P4.5	P4.4	P4.3	P4.2	P4.1	P4.0
P5	C8H	-	-	P5.5	P5.4	P5.3	P5.2	P5.1	P5.0
P6	E8H	P6.7	P6.6	P6.5	P6.4	P6.3	P6.2	P6.1	P6.0
P7	F8H	P7.7	P7.6	P7.5	P7.4	P7.3	P7.2	P7.1	P7.0

Write and read the status of the port

Write 0: write low level to the buffer of ports

Write 1: write high level to the buffer of ports

Read : read the level of points

STC MCU

Registers which configure the mode of ports

Symbol	Address	B7	B6	B5	B4	B3	B2	B1	B0
P0M0	94H								
P0M1	93H								
P1M0	92H								
P1M1	91H								
P2M0	96H								
P2M1	95H								
P3M0	B2H								
P3M1	B1H								
P4M0	B4H								
P4M1	B3H								
P5M0	CAH	-	-						
P5M1	C9H	-	-						
P6M0	CCH								
P6M1	CBH								
P7M0	E2H								
P7M1	E1H								

configure the mode of ports

PnM1.x	PnM0.x	The mode of Pn.x
0	0	quasi bidirectional
0	1	push-pull output
1	0	high-impedance
1	1	open drain mode

register control the pull-up resister in port

Symbol	Address	B7	B6	B5	B4	B3	B2	B1	B0
P0PU	FE10H								
P1PU	FE11H								
P2PU	FE12H								
P3PU	FE13H								
P4PU	FE14H								
P5PU	FE15H								
P6PU	FE16H								
P7PU	FE17H								

Control bit for internal 3.7K pull-up resistor

0 : forbid internal 3.7K pull-up resistor (the measured is about 4.2K)

1 : enable internal 3.7K pull-up resistor (the measured is about 4.2K)

STC MCU

register which is control the Schmidt trigger in port

Symbol	Address	B7	B6	B5	B4	B3	B2	B1	B0
P0NCS	FE18H								
P1NCS	FE19H								
P2NCS	FE1AH								
P3NCS	FE1BH								
P4NCS	FE1CH								
P5NCS	FE1DH								
P6NCS	FE1EH								
P7NCS	FE1FH								

Control bit for Schmidt trigger in port

0 : enable the function of Schmidt trigger in port

1 : forbid the function of Schmidt trigger in port

VCC=5.0V	minimum value	Maxim value	
Normal I/O input high	2.2V	-	Open Schmidt trigger
Normal I/O input low	-	1.4V	
Normal I/O input high	1.6V	-	Close Schmidt trigger
Normal I/O input low	-	1.5V	
Reset pin input high	2.2V	-	
Reset pin input low	-	1.8V	

VCC=3.3V	Minimum value	Maxim value	
Normal I/O input high	1.6V	-	Open Schmidt trigger
Normal I/O input low	-	1.0V	
Normal I/O input high	1.2V		Close Schmidt trigger
Normal I/O input low		1.1V	
Reset pin input high	1.7V	-	
Reset pin input low	-	1.3V	

10.2 I/O Ports Configurations

Two registers are used to configure each I/O mode.

Taking Port 0 as an example, two registers, P0M0 and P0M1, are used to configure Port 0, as shown in the following figure:

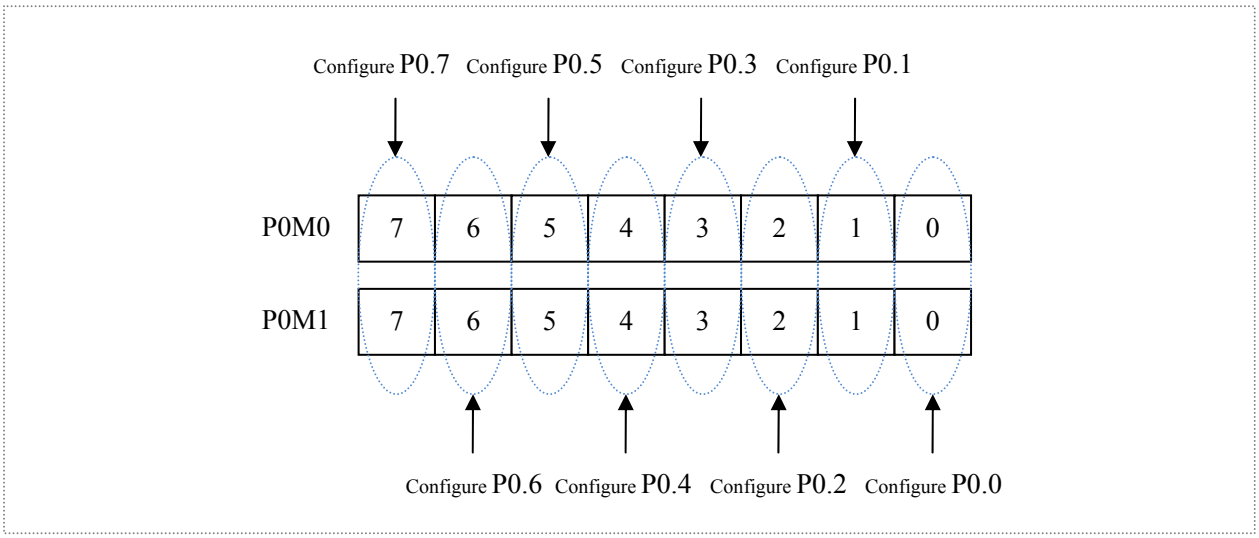

The combination of bit 0 of P0M0 and bit 0 of P0M1 is used to configure the mode of P0.0.
The combination of bit 1 of P0M0 and bit 1 of P0M1 is used to configure the mode of P0.1.
All other I/O lines configurations are similar.

The combination of PnM0 and PnM1 to configure the I/O ports mode is as following.

PnM1	PnM0	I/O ports Mode
0	0	Quasi bidirectional (traditional 8051 I/O port, weak pull-up) Sink Current up to 20mA , Pull-up Current is 270~150μA (manufacturing error may be exist)
0	1	Push-pull output (strong pull-up output, current can be up to 20mA, resistors should be used to restrict current)
1	0	high-impedance (where current can neither flow in nor out)
1	1	Open Drain mode. The internal pull-up resistors are disabled. The open drain mode can be used for both external status reading and output high or low. To read the external state correctly or output high level, the external pull-up resistors should be connected, otherwise the external state can not be read and the high level can not be output.

Note: n = 0,1,2,3,4,5,6,7

Note:

Any I/O port line can tolerate 20mA of sink current in weak pull-up mode(quasi-bidirectional mode) or strong push-pull output mode or open drain mode, and can output 20mA pull current in the strong push-pull output mode. Current limiting resistors should be connected in all I/O mode above, such as 1KΩ, 560Ω, 472Ω, etc. The entire chip operating current is recommended not to exceed 90mA, that is, the current flow in from the VCC should not exceed 90mA, the current flow out from the GND should not exceed 90mA, the overall inflow or outflow current is advised not to exceed 90mA.

10.3 I/O ports structure

10.3.1 Quasi-Bidirectional I/O (weak pull-up)

A quasi bidirectional port can be used as an input and output functions without the need to reconfigure the port. This is because the drive capability is weak when the port outputs a logic high level, allowing external devices to pull it low. When the pin outputs low, it's strong driving capability and able to sink a considerable current. There are three pull-up transistors in the quasi-bidirectional output to suit different needs.

One of the three pull-up transistors, called a "weak pull-up", is turned on when the port register is logic "1" and the pin itself is logic "1". This pull-up transistor provides the basic drive current to make the quasi-bidirectional port output logic "1". If one of the pin outputs logic "1" and the external device pulls it low, the weak pull-up transistor is off and the "very weak pull-up" maintains on. To pull the pin low, the external device must have sufficient sink capability to make the voltage on the pin drop below the threshold voltage. For a 5V microcontroller, the current of "weak pull-up" transistor is about 250uA; for a 3.3V microcontroller, the current of "weak pull-up" transistor is about 150uA.

The second pull-up transistor, called "very weak pull-up", turns on when the port latch is "1". When the pin is not connected, this very weak pull-up source produces a weak pull-up current that pulls the pin high. For a 5V microcontroller, the current of "weak pull-up" transistor is about 18uA; for 3.3V microcontrollers, the current of "weak pull-up" transistor is about 5uA.

The third pull-up transistor is called "strong pull-up". This pull-up transistor is used to speed up the low-to-high transition for quasi-bidirectional port pin when the port latch changes from logic "0" to logic "1". When this occurs, the strong pull-up transistor keeps on for about two clocks to quickly pull the pin high.

Quasi-bidirectional port (weak pull-up) has a Schmidt trigger and an interference suppression circuit. To read the correct external state, quasi-bidirectional port (weak pull-up) should latch to '1' before reading.

The structure of quasi-bidirectional port (weak pull-up) output is shown below:

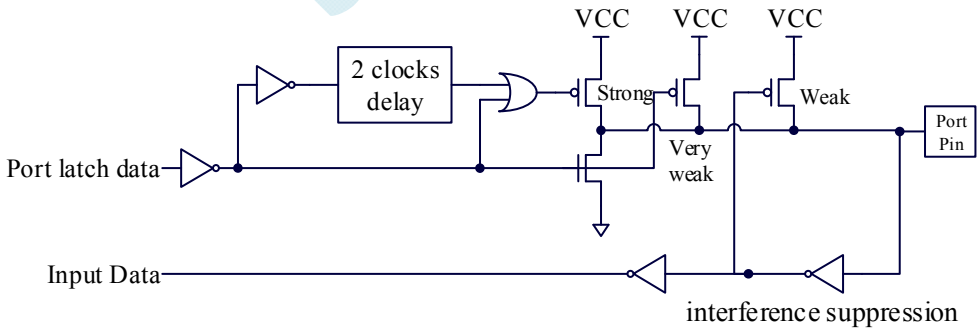

10.3.2 Push-Pull Output

The configuration of the strong push-pull output mode is the same as the pull-down configuration of the open-drain output mode and quasi-bidirectional mode. However, the push-pull output mode can provide a sustained strong pull-up when the latch is logic "1". Push-pull mode is generally used when more drive current is required.

The structure of strong push-pull pin configuration is shown below:

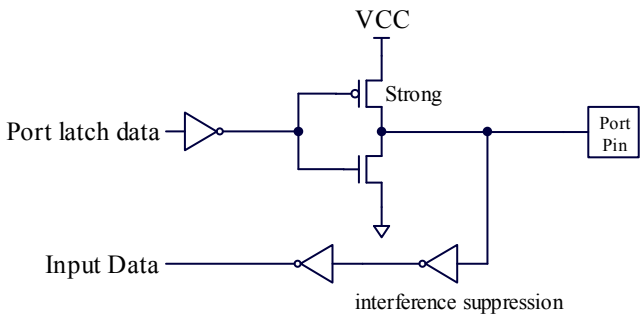

10.3.3 High-Impedance

The current can neither flow in nor flow out.
The input port has a Schmidt trigger input and an interference suppression circuit.

The structure of high-impedance input pin configuration is shown below:

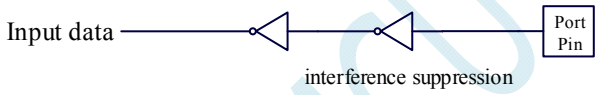

10.3.4 Open-Drain Output

The open-drain mode can be used for both reading external status and outputing high or low level. To read the external state correctly or output a high level, the external pull-up resistor should be connected.

The open-drain output configuration turns off all pull-up transistors when the port latch is logic "0”.There must be an external pull-up in this configuration when the port outputs a logic high, typically the port pin is externally connected to VCC through a resistor. An open-drain I/O port pin can read the external state if the external pull-up resistor is connected. Here, the open-drain mode I/O port pin can be used as input mode. The pull-down in this way is the same as quasi-bidirectional mode.

The open drain port has a Schmidt trigger input and an interference suppression circuit.

The structure of output port configuration is shown below:

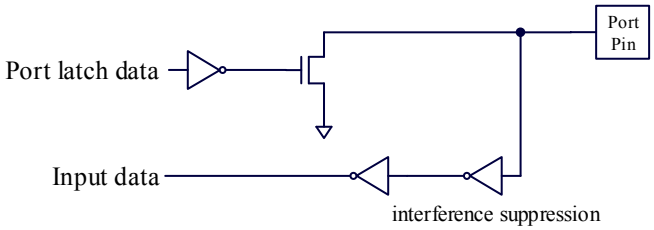

10.4 Instructions about special I / O ports

10.4.1 P2.0 / RSTCV

The initial level after powering on the STC8 series, P2.0 can be set by following hardware options in the ISP download software.

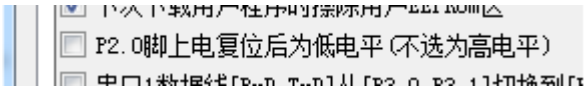

Notions: when the operating voltage of the MCU is less than 1.6V, the P2.0 out level is high, only when the operating voltage of the MCU rising above 1.6V, P2.0 will output the level which set by user's hardware option.

10.4.2 I / O ports related to PWM

All the I/O ports of the STC8 series have a week pull-up mode after reset when power-on.The users can configure open-drain mode on PWM related I/O ports through the following hardware options in the ISP download software.

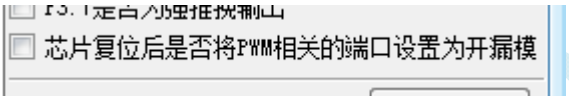

The I/O ports related to PWM on STC8 series are P1.0~P1.7，P2.0~P2.7，P6.0~P6.7.

10.5 Sample programs

10.5.1 Mode configure of the ports

Assembly codes

```
P0M0    DATA    094H
P0M1    DATA    093H
P1M0    DATA    092H
P1M1    DATA    091H
P2M0    DATA    096H
P2M1    DATA    095H
P3M0    DATA    0B2H
P3M1    DATA    0B1H
P4M0    DATA    0B4H
P4M1    DATA    0B3H
P5M0    DATA    0CAH
P5M1    DATA    0C9H
P6M0    DATA    0CCH
P6M1    DATA    0CBH
P7M0    DATA    0E2H
P7M1    DATA    0E1H
```

```
                ORG     0000H
                LJMP    MAIN

                ORG     0100H
MAIN:
                MOV     SP,#3FH

                MOV     P0M0,#00H           ;set P0.0~P0.7 as bidirectional mode
                MOV     P0M1,#00H
                MOV     P1M0,#0FFH          ;set P1.0~P1.7 as output mode
                MOV     P1M1,#00H
                MOV     P2M0,#00H           ;set P2.0~P2.7 as high impedance input mode
                MOV     P2M1,#0FFH
                MOV     P3M0,#0FFH          ;set P3.0~P3.7 as drain mode
                MOV     P3M1,#0FFH

                JMP     $

        END
```

Codes of C

```
#include "reg51.h"
#include "intrins.h"

sfr     P0M0    =   0x94;
sfr     P0M1    =   0x93;
sfr     P1M0    =   0x92;
sfr     P1M1    =   0x91;
sfr     P2M0    =   0x96;
sfr     P2M1    =   0x95;
sfr     P3M0    =   0xb2;
sfr     P3M1    =   0xb1;
sfr     P4M0    =   0xb4;
sfr     P4M1    =   0xb3;
sfr     P5M0    =   0xca;
sfr     P5M1    =   0xc9;
sfr     P6M0    =   0xcc;
sfr     P6M1    =   0xcb;
sfr     P7M0    =   0xe2;
sfr     P7M1    =   0xe1;

void main()
{
        P0M0 = 0x00;            //set P0.0~P0.7 as bidirectional mode
        P0M1 = 0x00;
        P1M0 = 0xff;            //set P0.0~P0.7 as bidirectional mode
        P1M1 = 0x00;
        P2M0 = 0x00;            //set P2.0~P2.7 as high impedance input mode
        P2M1 = 0xff;
        P3M0 = 0xff;            //set P3.0~P3.7 as drain mode
        P3M1 = 0xff;

        while (1);
}
```

10.5.2 Read and write operations on bidirectional port

Assembly codes

```
P0M0        DATA    094H
P0M1        DATA    093H

            ORG     0000H
            LJMP    MAIN

            ORG     0100H
MAIN:
            MOV     SP,#3FH

            MOV     P0M0,#00H           ;set P0.0~P0.7 as bidirectional mode
            MOV     P0M1,#00H

            SETB    P0.0                ;P0.0 input high
            CLR     P0.0                ;P0.0 input low

            SETB    P0.0                ;enable internal weak pull-up resistor before reading port
            NOP                         ;waiting for 2 clocks
    NOP
            MOV     C,P0.0              ;read status of the ports

            JMP     $

    END
```

Codes of C

```
#include "reg51.h"
#include "intrins.h"

sfr     P0M0    =   0x94;
sfr     P0M1    =   0x93;
sbit    P00     =   P0^0;

void main()
{
    P0M0 = 0x00;            //set P0.0~P0.7 as bidirectional mode
    P0M1 = 0x00;

    P00 = 1;                //P0.0 input high
    P00 = 0;                ;P0.0 input low

    P00 = 1;                //enable internal weak pull-up resistor before reading port
    _nop_();                //waiting for 2 clocks
    _nop_();
    CY = P00;               //read status of the ports

    while (1);
}
```

11 Instruction Set

Mnemonic		Description	Bytes	Cycle
ADD	A,Rn	Add register to Accumulator	1	1
ADD	A,direct	Add ditect byte to Accumulator	2	1
ADD	A,@Ri	Add indirect RAM to Accumulator	1	1
ADD	A,#data	Add immediate data to Accumulator	2	1
ADDC	A,Rn	Add register to Accumulator with Carry	1	1
ADDC	A,direct	Add ditect byte to Accumulator with Carry	2	1
ADDC	A,@Ri	Add indirect RAM to Accumulator with Carry	1	1
ADDC	A,#data	Add immediate data to Accumulator with Carry	2	1
SUBB	A,Rn	Subtract Register from Accumulator with borrow	1	1
SUBB	A,direct	Subtract direct byte from Accumulator with borrow	2	1
SUBB	A,@Ri	Subtract indirect RAM from Accumulator with borrow	1	1
SUBB	A,#data	Substract immediate data from Accumulator with borrow	2	1
INC	A	Increment Accumulator	1	1
INC	Rn	Increment register	1	1
INC	direct	Increment direct byte	2	1
INC	@Ri	Increment indirect RAM	1	1
DEC	A	Decrement Accumulator	1	1
DEC	Rn	Decrement Register	1	1
DEC	direct	Decrement direct byte	2	1
DEC	@Ri	Decrement indirect RAM	1	1
INC	DPTR	Increment Data Pointer	1	1
MUL	AB	Multiply A & B, high byte of result is in B, low byte in A	1	2
DIV	AB	Divde A by B, quotient is in A, remainder is in B.	1	6
DA	A	Decimal Adjust Accumulator	1	3
ANL	A,Rn	AND Register to Accumulator	1	1
ANL	A,direct	AND direct byte to Accumulator	2	1
ANL	A,@Ri	AND indirect RAM to Accumulator	1	1
ANL	A,#data	AND immediate data to Accumulator	2	1
ANL	direct,A	AND Accumulator to direct byte	2	1
ANL	direct,#data	AND immediate data to direct byte	3	1
ORL	A,Rn	OR register to Accumulator	1	1
ORL	A,direct	OR direct byte to Accumulator	2	1
ORL	A,@Ri	OR indirect RAM to Accumulator	1	1

STCMCU

ORL	A,#data	OR immediate data to Accumulator	2	1
ORL	direct,A	OR Accumulator to direct byte	2	1
ORL	direct,#data	OR immediate data to direct byte	3	1
XRL	A,Rn	Exclusive-OR register to Accumulator	1	1
XRL	A,direct	Exclusive-OR direct byte to Accumulator	2	1
XRL	A,@Ri	Exclusive-OR indirect RAM to Accumulator	1	1
XRL	A,#data	Exclusive-OR immediate data to Accumulator	2	1
XRL	direct,A	Exclusive-OR Accumulator to direct byte	2	1
XRL	direct,#data	Exclusive-OR immediate data to direct byte	3	1
CLR	A	Clear Accumulator	1	1
CPL	A	Complement Accumulator	1	1
RL	A	Rotate Accumulator Left	1	1
RLC	A	Rotate Accumulator Left through the Carry	1	1
RR	A	Rotate Accumulator Right	1	1
RRC	A	Rotate Accumulator Right through the Carry	1	1
SWAP	A	Swap nibbles within the Accumulator	1	1
CLR	C	Clear Carry	1	1
CLR	bit	Clear direct bit	2	1
SETB	C	Set Carry	1	1
SETB	bit	Set direct bit	2	1
CPL	C	Complement Carry	1	1
CPL	bit	Complement direct bit	2	1
ANL	C,bit	AND direct bit to Carry	2	1
ANL	C,/bit	AND complement of direct bit to Carry	2	1
ORL	C,bit	OR direct bit to Carry	2	1
ORL	C,/bit	OR complement of direct bit to Carry	2	1
MOV	C,bit	Move direct bit to Carry	2	1
MOV	bit,C	Move Carry to direct bit	2	1
MOV	A,Rn	Move register to Accumulator	1	1
MOV	A,direct	Move direct byte to Accumulator	2	1
MOV	A,@Ri	Move indirect RAM to Accumulator	1	1
MOV	A,#data	Move immediate data to Accumulator	2	1
MOV	Rn,A	Move Accumulator to register	1	1
MOV	Rn,direct	Move direct byte to register	2	1
MOV	Rn,#data	Move immediate data to register	2	1
MOV	direct,A	Move Accumulator to direct byte	2	1
MOV	direct,Rn	Move register to direct byte	2	1

STC MCU

MOV	direct,direct	Move direct byte to direct	3	1
MOV	direct,@Ri	Move indirect RAM to direct byte	2	1
MOV	direct,#data	Move immediate data to direct byte	3	1
MOV	@Ri,A	Move Accumulator to indirect RAM	1	1
MOV	@Ri,direct	Move direct byte to indirect RAM	2	1
MOV	@Ri,#data	Move immediate data to indirect RAM	2	1
MOV	DPTR,#data16	Move 16-bit immdiate data to indirect RAM	3	1
MOVC	A,@A+DPTR	Move Code byte relative to DPTR to Accumulator	1	4
MOVC	A,@A+PC	Move Code byte relative to PC to Accumulator	1	3
MOVX	A,@Ri	Move extended RAM(8-bit addr) to Accumulator (Read)	1	3[1]
MOVX	A,@DPTR	Move extended RAM(16-bit addr) to Accumulator (Read)	1	2[1]
MOVX	@Ri,A	Move Accumulator to extended RAM(8-bit addr) (Write)	1	3[1]
MOVX	@DPTR,A	Move Accumulator to extended RAM(16-bit addr) (Write)	1	2[1]
PUSH	direct	Push direct byte onto stack	2	1
POP	direct	POP direct byte from stack	2	1
XCH	A,Rn	Exchange register with Accumulator	1	1
XCH	A,direct	Exchange direct byte with Accumulator	2	1
XCH	A,@Ri	Exchange indirect RAM with Accumulator	1	1
XCHD	A,@Ri	Exchange low-order Digit indirect RAM with Accumulator	1	1
ACALL	addr11	Absolute Subroutine Call	2	3
LCALL	addr16	Long Subroutine Call	3	3
RET		Return from Subroutine	1	3
RETI		Return from interrupt	1	3
AJMP	addr11	Absolute Jump	2	3
LJMP	addr16	Long Jump	3	3
SJMP	rel	Short Jump (relative addr)	2	3
JMP	@A+DPTR	Jump indirect relative to the DPTR	1	4
JZ	rel	Jump if Accumulator is Zero	2	1/3[2]
JNZ	rel	Jump if Accumulator is not Zero	2	1/3[2]
JC	rel	Jump if Carry is set	2	1/3[2]
JNC	rel	Jump if Carry not set	2	1/3[2]
JB	bit,rel	Jump if direct bit is set	3	1/3[2]
JNB	bit,rel	Jump if direct bit is not set	3	1/3[2]
JBC	bit,rel	Jump if direct bit is set & clear bit	3	1/3[2]
CJNE	A,direct,rel	Compare direct byte to Accumulator and jump if not equal	3	1/3[2]
CJNE	A,#data,rel	Compare immediate data to Accumulator and Jump if not equal	3	1/3[2]

CJNE	Rn,#data,rel	Compare immediate data to register and Jump if not equal	3	1/3[2]
CJNE	@Ri,#data,rel	Compare immediate data to indirect and jump if not equal	3	1/3[2]
DJNZ	Rn,rel	Decrement register and jump if not Zero	2	1/3[2]
DJNZ	direct,rel	Decrement direct byte and Jump if not Zero	3	1/3[2]
NOP		No Operation	1	1

[1]: When accessing external extended RAM, the instruction execution cycle is related to the SPEED [1: 0] bits in the BUS_SPEED register.

[2]: For the conditional jump statement, the execution cycle will be different based on whether the conditions are met or not. When the conditions are not met, the jump will not occur and continue to execute the next instruction, then execution cycle of the conditional jump statement is 1 machine cycle. When the conditions are met, the jump will occur, the execution cycle of the conditional jump statement is 3 machine cycles.

STC MCU

12 Interrupt System

The interrupt system is set up to give the CPU real-time processing capabilities for external emergencies.

If an emergency request occurrs when CPU is dealing with something, and the CPU is required to suspend the current work to handle the emergency. After the emergency processing is completed, the CPU returns to the place where it was interrupted and continues the original work. This process is called interrupt. The componet that implements this function is called the interrupt system, and the request source that makes the CPU interrupt to suspend the current work is called the interrupt source. Microcontroller interrupt system generally allows multiple interrupt sources. When several interrupt sources simultaneously require the CPU to handle the requests, the CPU should response the interrupt source which has the highest priority. Usually the CPU handle the interrupt requests according to the priority of interrupt sources. The most urgent incidents have the highest priority. Each interrupt source has a priority level. The CPU always responds the highest priority interrupt request.

Another interrupt source request with a higher priority takes place when the CPU is processing an interrupt source request, that is, the CPU is executing the corresponding interrupt service routine. If the CPU can suspend the original interrupt service routine, and deal with the higher priority interrupt request source, and then return to the original low-level interrupt service routine after processing, this process is called interrupt nesting. Such an interrupt system is called a multi-level interrupt system, whereas an interrupt system without interrupt nesting is called a single-level interrupt system.

The corresponding interrupt request can be masked by turning off the general enable bit (EA / IE.7) or the corresponding interrupt enable bit. The CPU can be enabled to respond to the corresponding interrupt request by turning on the corresponding interrupt enable bit. Every interrupt source can be set independently by software to interrupt enabled or disabled state. The priority of some interrupts can be set by software. Higher priority interrupt requests can interrupt lower priority interrupts, whereas lower priority interrupt requests can not interrupt higher priority interrupts. When two interrupts with the same priority ocuur simultaneously, the inquiry order determines which interrupt the system responds firstly.

12.1 Interrupt Sources of STC8F family

The √ in the following table indicates that the corresponding series have the corresponding interrupt source.

interrupt sources	STC8A8K64S4A12 series	STC8A4K64S2A12 series	STC8F2K64S4 series	STC8F2K64S2 series
External interrupt 0 (INT0)	√	√	√	√
Timer 0 interrupt (Timer0)	√	√	√	√
External interrupt 1 (INT1)	√	√	√	√
Timer 1 interrupt (Timer1)	√	√	√	√

serial port 1 interrupt (UART1)	√	√	√	√
ADC interrupt (ADC)	√	√		
Low voltage detection interrupt (LVD)	√	√	√	√
CCP/PCA/PWM interrupt (CCP/PCA)	√	√	~~√~~	
serial port 2 interrupt (UART2)	√	√	√	√
SPI interrupt (SPI)	√	√	√	√
External interrupt 2 (INT2)	√	√	√	√
External interrupt 3 (INT3)	√	√	√	√
Timer 2 interrupt (Timer2)	√	√	√	√
External interrupt 4 (INT4)	√	√	√	√
serial port 3 interrupt (UART3)	√		√	
serial port 4 interrupt (UART4)	√		√	
Timer 3 interrupt (Timer3)	√	√	√	√
Timer 4 interrupt (Timer4)	√	√	√	√
comparator interrupt (CMP)	√	√	√	√
enhance PWM interrupt	√	√		
PWM fault detection interrupt (PWMFD)	√	√		
I2C interrupt	√	√	√	√

STCMCU

12.1.1 Interrupt Sources of STC8F8K64S4A10 series

STC8F8K64S4A10 series microcontrollers support 22 interrupt sources. They are external interrupt 0 (INT0), Timer 0 interrupt (Timer 0), external interrupt 1(INT1), Timer 1 interrupt (Timer 1), serial port 1 interrupt (UART1), ADC interrupt, low voltage detection interrupt (LVD), CCP/PCA interrupt, serial port 2 interrupt (UART2), SPI interrupt, external interrupt 2(INT2), external interrupt 3(INT3), Timer 2 interrupt (Timer 2), external interrupt 4 (INT4), serial port 3 interrupt (UART3), serial port 4 interrupt (UART4), Timer 3 interrupt (Timer 3), Timer 4 interrupt (Timer 4), Comparator interrupt (CMP), PWM interrupt, PWM fault detection interrupt (PWMFD) and I2C interrupt.

Except for external interrupt 2 (INT2), external interrupt 3 (INT3), serial port 3(UART3) interrupt, serial port 4(UART4) interrupt, Timer 2 interrupt, Timer 3 interrupt, Timer 4 interrupt and comparator interrupt having the fixed lowest priority, all the other interrupts have four priority levels.

12.1.2 Interrupt Sources of STC8A8K64S4A12 series

STC8A8K64S4A12 series microcontrollers support 22 interrupt sources. They are external interrupt 0 (INT0), Timer 0 interrupt (Timer 0), external interrupt 1(INT1), Timer 1 interrupt (Timer 1), serial port 1 interrupt (UART1), ADC interrupt, low voltage detection interrupt (LVD), CCP/PCA interrupt, serial port 2 interrupt (UART2), SPI interrupt, external interrupt 2(INT2), external interrupt 3(INT3), Timer 2 interrupt (Timer 2), external interrupt 4 (INT4), serial port 3 interrupt (UART3), serial port 4 interrupt (UART4), Timer 3 interrupt (Timer 3), Timer 4 interrupt (Timer 4), Comparator interrupt (CMP), PWM interrupt, PWM fault detection interrupt (PWMFD) and I2C interrupt.

Except for external interrupt 2 (INT2), external interrupt 3 (INT3), serial port 3(UART3) interrupt, serial port 4(UART4) interrupt, Timer 2 interrupt, Timer 3 interrupt, Timer 4 interrupt and comparator interrupt having the fixed lowest priority, all the other interrupts have four priority levels.

12.1.3 Interrupt Sources of STC8F2K64S4 series

STC8F2K64S4 series microcontrollers support 19 interrupt sources. They are external interrupt 0 (INT0), Timer 0 interrupt (Timer 0), external interrupt 1(INT1), Timer 1 interrupt (Timer 1), serial port 1 interrupt (UART1), low voltage detection interrupt (LVD), CCP/PCA interrupt, serial port 2 interrupt (UART2), SPI interrupt, external interrupt 2(INT2), external interrupt 3(INT3), Timer 2 interrupt (Timer 2), external interrupt 4 (INT4), Timer 3 interrupt (Timer 3), Timer 4 interrupt (Timer 4), Comparator interrupt (CMP) and I2C interrupt.

Except for external interrupt 2 (INT2), external interrupt 3 (INT3), serial port 3(UART3) interrupt, serial port 4(UART4) interrupt, Timer 2 interrupt, Timer 3 interrupt, Timer 4 interrupt and comparator interrupt having the fixed lowest priority, all the other interrupts have four priority levels.

12.1.4 Interrupt Sources of STC8F2K64S4 series

STC8F2K64S4 series microcontrollers support 19 interrupt sources. They are external interrupt 0 (INT0), Timer 0 interrupt (Timer 0), external interrupt 1(INT1), Timer 1 interrupt (Timer 1), serial port 1 interrupt (UART1), low voltage detection interrupt (LVD), CCP/PCA interrupt, serial port 2 interrupt (UART2), SPI interrupt, external interrupt 2(INT2), external interrupt 3(INT3), Timer 2 interrupt (Timer 2), external interrupt 4 (INT4), serial port 3 interrupt (UART3), serial port 4 interrupt (UART4), Timer 3 interrupt (Timer 3), Timer 4 interrupt (Timer 4), Comparator interrupt (CMP) and I2C interrupt..

Except for external interrupt 2 (INT2), external interrupt 3 (INT3), Timer 2 interrupt, Timer 3 interrupt, Timer 4 interrupt and comparator interrupt having the fixed lowest priority, all the other interrupts have four priority levels.

12.2 Interrupt Structure Diagrams of STC8F family

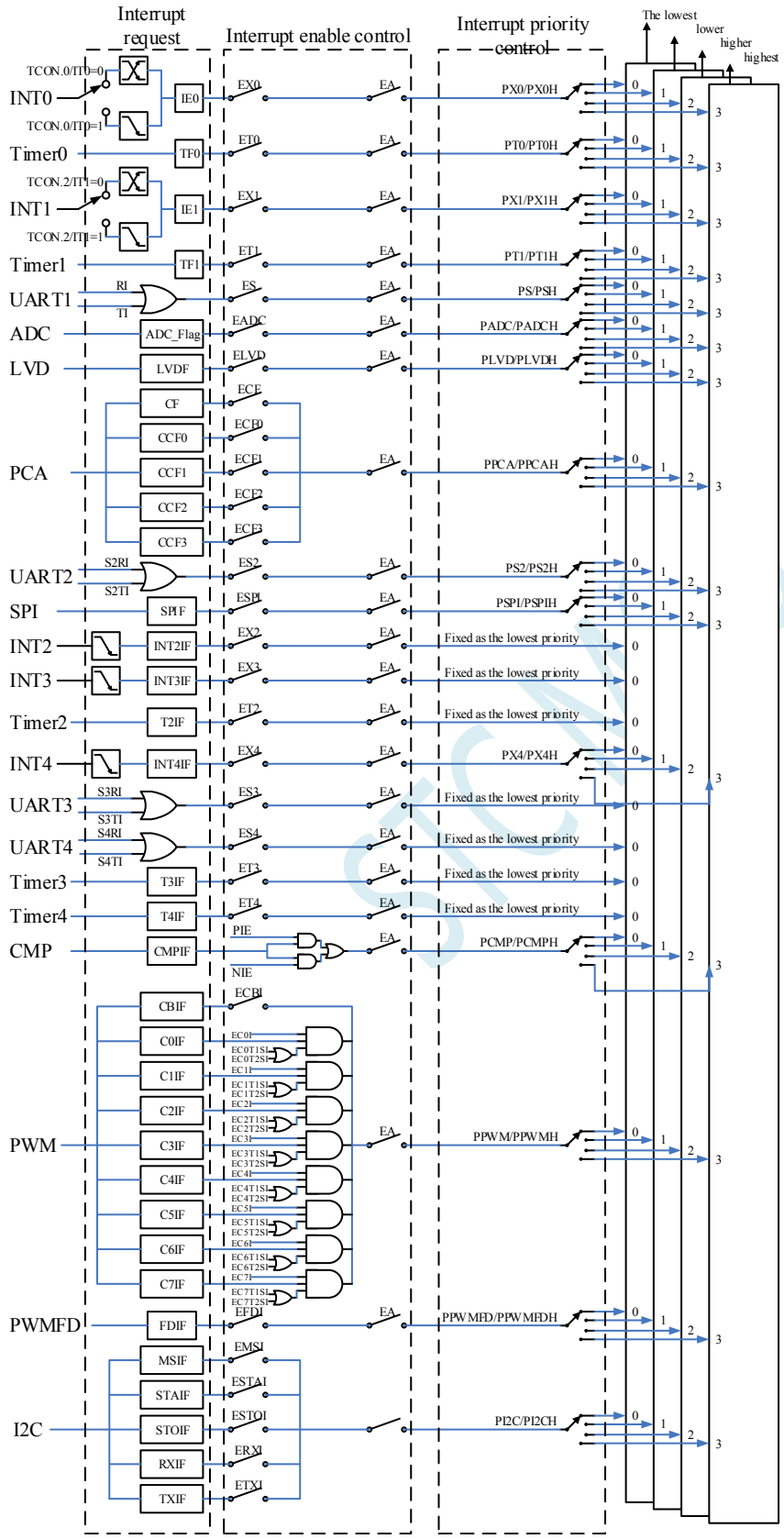

12.3 Interrupt List of STC8F family microcontrollers

interrupt source	interrupt vector	Order	Priority level setup bit	Priority level	interrupt request flag	interrupt enable bit
INT0	0003H	0	PX0PX0H	0/1/2/3	IE0	EX0
Timer0	000BH	1	PT0,PT0H	0/1/2/3	TF0	ET0
INT1	0013H	2	PX1,PX1H	0/1/2/3	IE1	EX1
Timer1	001BH	3	PT1,PT1H	0/1/2/3	TF1	ET1
UART1	0023H	4	PS,PSH	0/1/2/3	RI || TI	ES
ADC	002BH	5	PADC,PADCH	0/1/2/3	ADC_FLAG	EADC
LVD	0033H	6	PLVD,PLVDH	0/1/2/3	LVDF	ELVD
					CF	ECF
					CCF0	ECCF0
PCA	003BH	7	PPCA,PPCAH	0/1/2/3	CCF1	ECCF1
					CCF2	ECCF2
					CCF3	ECCF3
UART2	0043H	8	PS2,PS2H	0/1/2/3	S2RI || S2TI	ES2
SPI	004BH	9	PSPI,PSPIH	0/1/2/3	SPIF	ESPI
INT2	0053H	10		0	INT2IF	EX2
INT3	005BH	11		0	INT3IF	EX3
Timer2	0063H	12		0	T2IF	ET2
INT4	0083H	16	PX4,PX4H	0/1/2/3	INT4IF	EX4
UART3	008BH	17		0	S3RI || S3TI	ES3
UART4	0093H	18		0	S4RI || S4TI	ES4
Timer3	009BH	19		0	T3IF	ET3
Timer4	00A3H	20		0	T4IF	ET4
CMP	00ABH	21	PCMP,PCMPH	0/1/2/3	CMPIF	PIE|NIE

STC MCU

interrupt source	interrupt vector	Order	Priority level setup bit	Priority level	interrupt request flag	interrupt enable bit
					CBIF	ECBI
					C0IF	EC0I && EC0T1SI EC0I && EC0T2SI
					C1IF	EC1I && EC1T1SI EC1I && EC1T2SI
					C2IF	EC2I && EC2T1SI EC2I && EC2T2SI
PWM	00B3H	22	PPWM,PPWMH	0/1/2/3	C3IF	EC3I && EC3T1SI EC3I && EC3T2SI
					C4IF	EC4I && EC4T1SI EC4I && EC4T2SI
					C5IF	EC5I && EC5T1SI EC5I && EC5T2SI
					C6IF	EC6I && EC6T1SI EC6I && EC6T2SI
					C7IF	EC7I && EC7T1SI EC7I && EC7T2SI
PWMFD	00BBH	23	PPWMFD,PPWMFDH	0/1/2/3	FDIF	EFDI
					MSIF	EMSI
					STAIF	ESTAI
I2C	00C3H	24	PI2C,PI2CH	0/1/2/3	RXIF	ERXI
					TXIF	ETXI
					STOIF	ESTOI

You may declare interrupt service routine in C language as the following,

```
void  INT0_Routine(void)      interrupt  0;
void  TM0_Rountine(void)      interrupt  1;
void  INT1_Routine(void)      interrupt  2;
void  TM1_Rountine(void)      interrupt  3;
void  UART1_Routine(void)     interrupt  4;
void  ADC_Routine(void)       interrupt  5;
void  LVD_Routine(void)       interrupt  6;
void  PCA_Routine(void)       interrupt  7;
void  UART2_Routine(void)     interrupt  8;
void  SPI_Routine(void)       interrupt  9;
void  INT2_Routine(void)      interrupt  10;
void  INT3_Routine(void)      interrupt  11;
```

```
void    TM2_Routine(void)       interrupt  12;
void    INT4_Routine(void)      interrupt  16;
void    UART3_Routine(void)     interrupt  17;
void    UART4_Routine(void)     interrupt  18;
void    TM3_Routine(void)       interrupt  19;
void    TM4_Routine(void)       interrupt  20;
void    CMP_Routine(void)       interrupt  21;
void    PWM_Routine(void)       interrupt  22;
void    PWMFD_Routine(void)     interrupt  23;
void    I2C_Routine(void)       interrupt  24;
```

12.4 Interrupt Related Registers

Symbol	Description	Address	Bit Address and Symbol								Value after reset
			B7	B6	B5	B4	B3	B2	B1	B0	
IE	interrupt enable register	A8H	EA	ELVD	EADC	ES	ET1	EX1	ET0	EX0	0000,0000
IE2	interrupt enable register 2	AFH	-	ET4	ET3	ES4	ES3	ET2	ESPI	ES2	x000,0000
INTCLKO	interrupt and clock output control register	8FH	-	EX4	EX3	EX2	-	T2CLKO	T1CLKO	T0CLKO	x000,x000
IP	interrupt Priority Low	B8H	PPCA	PLVD	PADC	PS	PT1	PX1	PT0	PX0	0000,0000
IPH	interrupt Priority High	B7H	PPCAH	PLVDH	PADCH	PSH	PT1H	PX1H	PT0H	PX0H	0000,0000
IP2	2nd interrupt Priority Low register	B5H	-	PI2C	PCMP	PX4	PPWMFD	PPWM	PSPI	PS2	x000,0000
IP2H	2nd interrupt Priority High register	B6H	-	PI2CH	PCMPH	PX4H	PPWMFDH	PPWMH	PSPIH	PS2H	x000,0000
TCON	Timer 0 and 1 control	88H	TF1	TR1	TF0	TR0	IE1	IT1	IE0	IT0	0000,0000
AUXINTIF	Extended external interrupt flag register	EFH	-	INT4IF	INT3IF	INT2IF	-	T4IF	T3IF	T2IF	x000,x000
SCON	Serial port 1 control	98H	SM0/FE	SM1	SM2	REN	TB8	RB8	TI	RI	0000,0000
S2CON	Serial port 2 control	9AH	S2SM0	-	S2SM2	S2REN	S2TB8	S2RB8	S2TI	S2RI	0100,0000
S3CON	Serial port 3 control	ACH	S3SM0	S3ST3	S3SM2	S3REN	S3TB8	S3RB8	S3TI	S3RI	0000,0000
S4CON	Serial port 4 control	84H	S4SM0	S4ST4	S4SM2	S4REN	S4TB8	S4RB8	S4TI	S4RI	0000,0000
PCON	Power control register	87H	SMOD	SMOD0	LVDF	POF	GF1	GF0	PD	IDL	0011,0000
ADC_CONTR	ADCcontrol register	BCH	ADC_POWER	ADC_START	ADC_FLAG	-		ADC_CHS[3:0]			000x,0000
SPSTAT	SPI Status register	CDH	SPIF	WCOL	-	-	-	-	-	-	00xx,xxxx
CCON	PCA Control Register	D8H	CF	CR	-	-	CCF3	CCF2	CCF1	CCF0	00xx,0000
CMOD	PCA Mode Register	D9H	CIDL	-	-	-		CPS[2:0]		ECF	0xxx,0000
CCAPM0	PCA 0 Mode Register	DAH	-	ECOM0	CCAPP0	CCAPN0	MAT0	TOG0	PWM0	ECCF0	x000,0000
CCAPM1	PCA 1 Mode Register	DBH	-	ECOM1	CCAPP1	CCAPN1	MAT1	TOG1	PWM1	ECCF1	x000,0000
CCAPM2	PCA 2 Mode Register	DCH	-	ECOM2	CCAPP2	CCAPN2	MAT2	TOG2	PWM2	ECCF2	x000,0000
CCAPM3	PCA 3 Mode Register	DDH	-	ECOM3	CCAPP3	CCAPN3	MAT3	TOG3	PWM3	ECCF3	x000,0000
CMPCR1	Comparator control register 1	E6H	CMPEN	CMPIF	PIE	NIE	PIS	NIS	CMPOE	CMPRES	0000,0000

PWMCFG	PWM Configuration Register	F1H	CBIF	ETADC	-	-	-	-	-	-	00xx,xxxx
PWMCR	PWM Control register	FEH	ENPWM	ECBI	-	-	-	-	-	-	00xx,xxxx
PWMIF	PWM interrupt Flag register	F6H	C7IF	C6IF	C5IF	C4IF	C3IF	C2IF	C1IF	C0IF	0000,0000
PWMFDCR	PWM Fault Dectection Control Register	F7H	INVCMP	INVIO	ENFD	FLTFLIO	EFDI	FDCMP	FDIO	FDIF	0000,0000

Symbol	Description	Address	Bit Address and Symbol								Value after reset
			B7	B6	B5	B4	B3	B2	B1	B0	
PWM0CR	PWM0 Control register	FF04H	ENC0O	C0INI	-	C0_S[1:0]		EC0I	EC0T2SI	EC0T1SI	00x0,0000
PWM1CR	PWM1 Control register	FF14H	ENC1O	C1INI	-	C1_S[1:0]		EC1I	EC1T2SI	EC1T1SI	00x0,0000
PWM2CR	PWM2 Control register	FF24H	ENC2O	C2INI	-	C2_S[1:0]		EC2I	EC2T2SI	EC2T1SI	00x0,0000
PWM3CR	PWM3 Control register	FF34H	ENC3O	C3INI	-	C3_S[1:0]		EC3I	EC3T2SI	EC3T1SI	00x0,0000
PWM4CR	PWM4 Control register	FF44H	ENC4O	C4INI	-	C4_S[1:0]		EC4I	EC4T2SI	EC4T1SI	00x0,0000
PWM5CR	PWM5 Control register	FF54H	ENC5O	C5INI	-	C5_S[1:0]		EC5I	EC5T2SI	EC5T1SI	00x0,0000
PWM6CR	PWM6 Control register	FF64H	ENC6O	C6INI	-	C6_S[1:0]		EC6I	EC6T2SI	EC6T1SI	00x0,0000
PWM7CR	PWM7 Control register	FF74H	ENC7O	C7INI	-	C7_S[1:0]		EC7I	EC7T2SI	EC7T1SI	00x0,0000
I2CMSCR	I^2C Master Control Register	FE81H	EMSI	-	-	-	-	MSCMD[2:0]			0xxx,x000
I2CMSST	I^2C Master Status Register	FE82H	MSBUSY	MSIF	-	-	-	-	MSACKI	MSACKO	00xx,xx00
I2CSLCR	I^2C Slave Control Register	FE83H	-	ESTAI	ERXI	ETXI	ESTOI	-	-	SLRST	x000,0xx0
I2CSLST	I^2C Slave Status Register	FE84H	SLBUSY	STAIF	RXIF	TXIF	STOIF	TXING	SLACKI	SLACKO	0000,0000

12.4.1 Interrupt Enable Control Registers (interrupt Enable bits)

IE (interrupt Enable Rsgister)

Symbol	Address	B7	B6	B5	B4	B3	B2	B1	B0
IE	A8H	EA	ELVD	EADC	ES	ET1	EX1	ET0	EX0

EA: The general or global interrupt enable control bit. The function of EA is to allow interrupts to be multi-level controlled. That is, every interrupt source is controlled by EA firstly and then by its own interrupt enable control bit.

0: all interrupts are masked, and no interrupt would be acknowledged.

1: enable the CPU interrupt, every interrupt source would be individually enabled or disabled by setting or clearing its enable bit.

ELVD: Low volatge detection interrupt enable bit.

0: disable low voltage detection interrupt.

1: enable Low voltage detection interrupt.

EADC: ADC interrupt enable bit.

0: disable ADC interrupt.

1: enable ADC interrupt.

ES: Serial Port 1 (UART1) interrupt enable bit.

0: disable UART1 interrupt.

1: enable UART1 interrupt.

ET1: Timer 1 interrupt enable bit.

0: disable Timer 1 interrupt.

1: enable Timer 1 interrupt.

EX1: External interrupt 1 enable bit.

0: disable external interrupt 1.

1: enable external interrupt 1.

ET0: Timer 0 interrupt enable bit.

0: disable Timer 0 interrupt.

1: enable Timer 0 interrupt.

EX0: External interrupt 0 enable bit.

0: disable external interrupt 0.

1: enable external interrupt 0.

IE2 (interrupt Enable 2 Rsgister) (Non bit-addressable)

Symbol	Address	B7	B6	B5	B4	B3	B2	B1	B0
IE2	AFH	-	ET4	ET3	ES4	ES3	ET2	ESPI	ES2

ET4: Timer 4 interrupt enable bit.

0: disable Timer 4 interrupt.

1: enable Timer 4 interrupt.

ET3: Timer 3 interrupt enable bit.

0: disable Timer 3 interrupt.

1: enable Timer 3 interrupt.

ES4: Serial Port 4 (UART4) interrupt enable bit.

0: disable UART4 interrupt.

1: enable UART4 interrupt.

ES3: Serial Port 3 (UART3) interrupt enable bit.

0: disable UART3 interrupt.

1: enable UART3 interrupt.

ET2: Timer 2 interrupt enable bit.

0: disable Timer 2 interrupt.

1: enable Timer 2 interrupt.

ESPI: SPI interrupt enalbe bit.

0: disable SPI interrupt.

1: enable SPI interrupt.

ES2: Serial Port 2 (UART2) interrupt enable bit.

0: disable UART2 interrupt.

1: enable UART2 interrupt.

INTCLKO (External interrupt Enable and Clock Output register control)

Symbol	Address	B7	B6	B5	B4	B3	B2	B1	B0
INTCLKO	8FH	-	EX4	EX3	EX2	-	T2CLKO	T1CLKO	T0CLKO

EX4: External interrupt 4 enabel bit.

0: disable External interrupt 4.

1: enable External interrupt 4.

EX3: External interrupt 3 enabel bit.

0: disable External interrupt 3.

1: enable External interrupt 3.

EX2: External interrupt 2 enabel bit.

0: disable External interrupt 2.

1: enable External interrupt 2.

PCA/CCP interrupt control registers

Symbol	Address	B7	B6	B5	B4	B3	B2	B1	B0
CMOD	D9H	CIDL	-	-	-		CPS[2:0]		ECF
CCAPM0	DAH	-	ECOM0	CCAPP0	CCAPN0	MAT0	TOG0	PWM0	ECCF0
CCAPM1	DBH	-	ECOM1	CCAPP1	CCAPN1	MAT1	TOG1	PWM1	ECCF1
CCAPM2	DCH	-	ECOM2	CCAPP2	CCAPN2	MAT2	TOG2	PWM2	ECCF2
CCAPM3	DDH	-	ECOM3	CCAPP3	CCAPN3	MAT3	TOG3	PWM3	ECCF3

ECF: PCA counter interrupt enable bit.

0: disable PCA counter interrupt.

1: enable PCA counter interrupt.

ECCF0: PCA 0 interrupt enable bit.

0: disable PCA 0 interrupt.

1: enable PCA 0 interrupt.

ECCF1: PCA 1 interrupt enable bit.

0: disable PCA 1 interrupt.

1: enable PCA 1 interrupt.

ECCF2: PCA 2 interrupt enable bit.

0: disable PCA 2 interrupt.

1: enable PCA 2 interrupt.

ECCF3: PCA 3 interrupt enable bit.

0: disable PCA 3 interrupt.

1: enable PCA 3 interrupt.

CMPCR1 (Comparator control register1)

Symbol	Address	B7	B6	B5	B4	B3	B2	B1	B0
CMPCR1	E6H	CMPEN	CMPIF	PIE	NIE	PIS	NIS	CMPOE	CMPRES

PIE: Comparator rising-edge interrupt enable bit.

0: disable comparator rising-edge interrupt.

1: enable comparator rising-edge interrupt.

NIE: Comparator falling -edge interrupt enable bit.

0: disable comparator falling -edge interrupt.

1: enable comparator falling -edge interrupt.

PWMCR (PWM Control register)

Symbol	Address	B7	B6	B5	B4	B3	B2	B1	B0
PWMCR	FEH	CMPEN	ENPWM	ECBI	-	-	-	-	-

ECBI: PWM couter interrupt enable bit.

0: disable PWM couter interrupt.

1: enable PWM couter interrupt.

PWMFDCR (PWM Fault Dectection Control Register)

Symbol	Address	B7	B6	B5	B4	B3	B2	B1	B0
PWMFDCR	F7H	INVCMP	INVIO	ENFD	FLTFLIO	EFDI	FDCMP	FDIO	FDIF

EFDI: PWM external fault event interrupt enable bit.

0: disable PWM external fault event interrupt.

1: enable PWM external fault event interrupt.

Enhanced PWM control registers

Symbol	Address	B7	B6	B5	B4	B3	B2	B1	B0
PWM0CR	FF04H	ENC0O	C0INI	-	C0_S[1:0]		EC0I	EC0T2SI	EC0T1SI
PWM1CR	FF14H	ENC1O	C1INI	-	C1_S[1:0]		EC1I	EC1T2SI	EC1T1SI
PWM2CR	FF24H	ENC2O	C2INI	-	C2_S[1:0]		EC2I	EC2T2SI	EC2T1SI
PWM3CR	FF34H	ENC3O	C3INI	-	C3_S[1:0]		EC3I	EC3T2SI	EC3T1SI
PWM4CR	FF44H	ENC4O	C4INI	-	C4_S[1:0]		EC4I	EC4T2SI	EC4T1SI
PWM5CR	FF54H	ENC5O	C5INI	-	C5_S[1:0]		EC5I	EC5T2SI	EC5T1SI
PWM6CR	FF64H	ENC6O	C6INI	-	C6_S[1:0]		EC6I	EC6T2SI	EC6T1SI
PWM7CR	FF74H	ENC7O	C7INI	-	C7_S[1:0]		EC7I	EC7T2SI	EC7T1SI

ECnI: PWMn level flipping interrupt enable bit.

0: disable PWMn interrupt.

1: enable PWMn interrupt.

ECnT2SI: PWMn second flipping interrupt enable bit.

0: disable PWMn second flipping interrupt.

1: enable PWMn second flipping interrupt.

ECnT1SI: PWMn first flipping interrupt enable bit.

0: disable PWMn first flipping interrupt.

1: enable PWMn first flipping interrupt.

I2C control registers

Symbol	Address	B7	B6	B5	B4	B3	B2	B1	B0
I2CMSCR	FE81H	EMSI	-	-	-	-	MSCMD[2:0]		
I2CSLCR	FE83H	-	ESTAI	ERXI	ETXI	ESTOI	-	-	SLRST

EMSI: I^2C master mode interrupt enable bit.

0: disable I^2C master mode interrupt.

1: enable I^2C master mode interrupt.

ESTAI: I^2C slave receives the START event interrupt enable bit.

0: disable I^2C slave receives the START event interrupt.

1: enable I^2C slave receives the START event interrupt.

ERXI: I^2C slave completes receiving data event interrupt enable bit.

0: disable I^2C slave completes receiving data event interrupt.

1: enable I^2C slave completes receiving data event interrupt.

ETXI: I^2C slave completes transmitting data event interrupt enable bit.

0: disable I^2C slave completes transmitting data event interrupt.

1: enable I^2C slave completes transmitting data event interrupt.

ESTOI: I^2C slave receives a STOP event interrupt enable bit.

0: disable I^2C slave receives a STOP event interrupt.

1: enable I^2C slave receives a STOP event interrupt.

12.4.2 Interrupt Request Registers (interrupt flags)

Timer control register

Symbol	Address	B7	B6	B5	B4	B3	B2	B1	B0
TCON	88H	TF1	TR1	TF0	TR0	IE1	IT1	IE0	IT0

TF1: Timer/Counter 1 Overflow Flag. Set by hardware on Timer/Counter 1 overflow. The flag can be cleared by software, however, it will be automatically cleared by the hardware when processor enters the Timer 1 interrupt service routine.

TF0: Timer/Counter 0 Overflow Flag. Set by hardware on Timer/Counter 0 overflow. The flag can be cleared by software, however, it will be automatically cleared by the hardware when processor enters the Timer 1 interrupt service routine.

IE1: External interrupt 1 request flag. Set by hardware when external interrupt rising or falling edge defined by IT1 is detected. The flag can be cleared by software, however, it will be automatically cleared when the processor enters the external interrupt 1 service routine.

IE0: External interrupt 0 request flag. Set by hardware when external interrupt rising or falling edge defined by IT0 is detected. The flag can be cleared by software, however, it will be automatically cleared when the processor enters the external interrupt 0 service routine.

Auxiliary interrupt flag register

Symbol	Address	B7	B6	B5	B4	B3	B2	B1	B0
AUXINTIF	EFH	-	INT4IF	INT3IF	INT2IF	-	T4IF	T3IF	T2IF

INT4IF: external int 4 interrupt request flag, which should be cleared by software.

INT3IF: external int 3 interrupt request flag, which should be cleared by software.

INT2IF: external int 2 interrupt request flag, which should be cleared by software.

T4IF: timer 4 overflow interrupt flag, which should be cleared by software.

T3IF: timer 3 overflow interrupt flag, which should be cleared by software.

T2IF: timer 2 overflow interrupt flag, which should be cleared by software.

Serial port control registers

Symbol	Address	B7	B6	B5	B4	B3	B2	B1	B0
SCON	98H	SM0/FE	SM1	SM2	REN	TB8	RB8	TI	RI
S2CON	9AH	S2SM0	-	S2SM2	S2REN	S2TB8	S2RB8	S2TI	S2RI
S3CON	ACH	S3SM0	S3ST3	S3SM2	S3REN	S3TB8	S3RB8	S3TI	S3RI
S4CON	84H	S4SM0	S4ST4	S4SM2	S4REN	S4TB8	S4RB8	S4TI	S4RI

TI: Transmit interrupt flag of UART1, which must be cleared manually by software.

RI: Receive interrupt flag of UART1, which must be cleared manually by software.

S2TI: Transmit interrupt flag of UART2, which must be cleared manually by software.

S2RI: Receive interrupt flag of UART2, which must be cleared manually by software.

S3TI: Transmit interrupt flag of UART3, which must be cleared manually by software.

S3RI: Receive interrupt flag of UART3, which must be cleared manually by software.

S4TI: Transmit interrupt flag of UART4, which must be cleared manually by software.

S4RI: Receive interrupt flag of UART4, which must be cleared manually by software.

Power control register

Symbol	Address	B7	B6	B5	B4	B3	B2	B1	B0
PCON	87H	SMOD	SMOD0	LVDF	POF	GF1	GF0	PD	IDL

LVDF: Low voltage detection interrupt flag, which should be cleared by software.

ADC control register

Symbol	Address	B7	B6	B5	B4	B3	B2	B1	B0
ADC_CONTR	BCH	ADC_POWER	ADC_START	ADC_FLAG	-	ADC_CHS[3:0]			

ADC_FLAG: ADC completes conversion interrupt request flag, which should be cleared by software.

SPI status register

Symbol	Address	B7	B6	B5	B4	B3	B2	B1	B0
SPSTAT	CDH	SPIF	WCOL	-	-	-	-	-	-

SPIF: SPI transfer completion interrupt request flag, which should be cleared by software.

PCA control register

Symbol	Address	B7	B6	B5	B4	B3	B2	B1	B0
CCON	D8H	CF	CR	-	-	CCF3	CCF2	CCF1	CCF0

CF: PCA counter overflow interrupt request flag, which should be cleared by software.

CCF3: PCA3 interrupt request flag, which should be cleared by software.

CCF2: PCA2 interrupt request flag, which should be cleared by software.

CCF1: PCA1 interrupt request flag, which should be cleared by software.

CCF0: PCA0 interrupt request flag, which should be cleared by software.

Comparator control register 1

Symbol	Address	B7	B6	B5	B4	B3	B2	B1	B0
CMPCR1	E6H	CMPEN	CMPIF	PIE	NIE	PIS	NIS	CMPOE	CMPRES

CMPIF: Comparator interrupt request flag, which should be cleared by software.

PWM Configuration Register

Symbol	Address	B7	B6	B5	B4	B3	B2	B1	B0
PWMCFG	F1H	CBIF	ETADC	-	-	-	-	-	-

CBIF: PWM counter interrupt request flag, which should be cleared by software.

PWM interrupt flag register

Symbol	Address	B7	B6	B5	B4	B3	B2	B1	B0

PWMIF	F6H	C7IF	C6IF	C5IF	C4IF	C3IF	C2IF	C1IF	C0IF

C7IF: PWM7 interrupt request flag, which should be cleared by software.

C6IF: PWM6 interrupt request flag, which should be cleared by software.

C5IF: PWM5 interrupt request flag, which should be cleared by software.

C4IF: PWM4 interrupt request flag, which should be cleared by software.

C3IF:PWM3 interrupt request flag, which should be cleared by software.

C2IF: PWM2 interrupt request flag, which should be cleared by software.

C1IF: PWM 1 interrupt request flag, which should be cleared by software.

C0IF: PWM0 interrupt request flag, which should be cleared by software.

PWM fault detection control register

Symbol	Address	B7	B6	B5	B4	B3	B2	B1	B0
PWMFDCR	F7H	INVCMP	INVIO	ENFD	FLTFLIO	EFDI	FDCMP	FDIO	FDIF

FDIF: PWM fault detection interrupt request flag, which should be cleared by software.

I2C status registers

Symbol	Address	B7	B6	B5	B4	B3	B2	B1	B0
I2CMSST	FE82H	MSBUSY	MSIF	-	-	-	-	MSACKI	MSACKO
I2CSLST	FE84H	SLBUSY	STAIF	RXIF	TXIF	STOIF	TXING	SLACKI	SLACKO

MSIF: I^2C master mode interrupt request flag, which should be cleared by software.

ESTAI: I^2C slave receives the START event interrupt request flag, which should be cleared by software.

ERXI: I^2C slave completes receiving data event interrupt request flag, which should be cleared by software.

ETXI: I^2C slave completes transmitting data event interrupt request flag, which should be cleared by software.

ESTOI: I^2C slave receives a STOP event interrupt request flag, which should be cleared by software.

12.4.3 Interrupt Priority Control Registers

interrupt priority control registers

Symbol	Address	B7	B6	B5	B4	B3	B2	B1	B0
IP	B8H	PPCA	PLVD	PADC	PS	PT1	PX1	PT0	PX0
IPH	B7H	PPCAH	PLVDH	PADCH	PSH	PT1H	PX1H	PT0H	PX0H
IP2	B5H	-	PI2C	PCMP	PX4	PPWMFD	PPWM	PSPI	PS2
IP2H	B6H	-	PI2CH	PCMPH	PX4H	PPWMFDH	PPWMH	PSPIH	PS2H

PX0H,PX0: External interrupt 0 interrupt priority control bit.

00: INT0 interrupt priority level is 0 (lowest)

01: INT0 interrupt priority level is 1

10: INT0 interrupt priority level is 2

11: INT0 interrupt priority level is 3 (highest)

PT0H,PT0: Timer 0 interrupt priority control bit.

00: Timer 0 interrupt priority level is 0 (lowest)

01: Timer 0 interrupt priority level is 1
10: Timer 0 interrupt priority level is 2
11: Timer 0 interrupt priority level is 3 (highest)

PX1H,PX1: External interrupt 1 interrupt priority control bit.

00：INT1 interrupt priority level is 0 (lowest)
01：INT1 interrupt priority level is 1
10：INT1 interrupt priority level is 2
11：INT1 interrupt priority level is 3 (highest)

PT1H,PT1: Timer 1 interrupt priority control bit.

00: Timer 1 interrupt priority level is 0 (lowest)
01: Timer 1 interrupt priority level is 1
10: Timer 1 interrupt priority level is 2
11: Timer 1 interrupt priority level is 3 (highest)

PSH,PS: UART1 interrupt priority control bit.

00: UART1 interrupt priority level is 0 (lowest)
01: UART1 interrupt priority level is 1
10: UART1 interrupt priority level is 2
11: UART1 interrupt priority level is 3 (highest)

PADCH,PADC: ADC interrupt priority control bit.

00: ADC interrupt priority level is 0 (lowest)
01: ADC interrupt priority level is 1
10: ADC interrupt priority level is 2
11: ADC interrupt priority level is 3 (highest)

PLVDH,PLVD: Low voltage detection interrupt priority control bit.

00: LVD interrupt priority level is 0 (lowest)
01: LVD interrupt priority level is 1
10: LVD interrupt priority level is 2
11: LVD interrupt priority level is 3 (highest)

PPCAH,PPCA: CCP/PCA interrupt priority control bit.

00: CCP/PCA interrupt priority level is 0 (lowest)
01: CCP/PCA interrupt priority level is 1
10: CCP/PCA interrupt priority level is 2
11: CCP/PCA interrupt priority level is 3 (highest)

PS2H,PS2: UART2 interrupt priority control bit.

00: UART2 interrupt priority level is 0 (lowest)
01: UART2 interrupt priority level is 1
10: UART2 interrupt priority level is 2
11: UART2 interrupt priority level is 3 (highest)

PSPIH,PSPI: SPI interrupt priority control bit.

00: SPI interrupt priority level is 0 (lowest)
01: SPI interrupt priority level is 1
10: SPI interrupt priority level is 2
11: SPI interrupt priority level is 3 (highest)

STC MCU

PPWMH,PPWM: PWM interrupt priority control bit.

00: PWM interrupt priority level is 0 (lowest)
01: PWM interrupt priority level is 1
10: PWM interrupt priority level is 2
11: PWM interrupt priority level is 3 (highest)

PPWMFDH,PPWMFD: PWM fault detection interrupt priority control bit.

00: PWMFD interrupt priority level is 0 (lowest)
01: PWMFD interrupt priority level is 1
10: PWMFD interrupt priority level is 2
11: PWMFD interrupt priority level is 3 (highest)

PX4H,PX4: External interrupt 4 interrupt priority control bit.

00: INT4 interrupt priority level is 0 (lowest)
01: INT4 interrupt priority level is 1
10: INT4 interrupt priority level is 2
11: INT4 interrupt priority level is 3 (highest)

PCMPH,PCMP: Comparator interrupt priority control bit.

00: CMP interrupt priority level is 0 (lowest)
01: CMP interrupt priority level is 1
10: CMP interrupt priority level is 2
11: CMP interrupt priority level is 3 (highest)

PI2CH,PI2C: I2C interrupt priority control bit.

00: I2C interrupt priority level is 0 (lowest)
01: I2C interrupt priority level is 1
10: I2C interrupt priority level is 2
11: I2C interrupt priority level is 3 (highest)

12.5 Demo codes

12.5.1 INT0 interrupt(rising and falling edges)

Assembly code

```
        ORG     0000H
        LJMP    MAIN
        ORG     0003H
        LJMP    INT0ISR

        ORG     0100H
INT0ISR:
        JB      INT0,RISING         ;judging rising and falling edges
        CPL     P1.0                ;test the port
    RETI
RISING:
        CPL     P1.1                ;test the port
    RETI
```

```
MAIN:
        MOV     SP,#3FH

        CLR     IT0             ;enable the rising and falling interrupt of INT0
        SETB    EX0             ;enable the interrupt of INT0
        SETB    EA
        JMP     $

    END
```

C code

```
#include "reg51.h"
#include "intrins.h"

sbit    P10     =   P1^0;
sbit    P11     =   P1^1;

void INT0_Isr() interrupt 0
{
    if (INT0)                   //judging rising and falling edges
    {
        P10 = !P10;             //test the port
    }
    else
    {
        P11 = !P11;             //test the port
    }
}

void main()
{
    IT0 = 0;                    //enable the rising and falling interrupt of INT0
    EX0 = 1;                    //enable the interrupt of INT0
    EA = 1;

    while (1);
}
```

12.5.2 INT0 interrupt(falling edge)

Assembly code

```
        ORG     0000H
        LJMP    MAIN
        ORG     0003H
        LJMP    INT0ISR

        ORG     0100H
INT0ISR:
        CPL     P1.0            ;test the port
    RETI

MAIN:
        MOV     SP,#3FH
```

```
            SETB    IT0             ;enable the falling interrupt of INT0
            SETB    EX0             ;enable the interrupt of INT0

            SETB    EA
            JMP     $

    END
```

C code

```
#include "reg51.h"
#include "intrins.h"

sbit    P10     =   P1^0;

void INT0_Isr() interrupt 0
{
    P10 = !P10;                     //test the port
}

void main()
{
    IT0 = 1;                        //enable the falling interrupt of INT0
    EX0 = 1;                        //enable the interrupt of INT0
    EA = 1;

    while (1);
}
```

12.5.3 INT1 interrupt(rising and falling edges)

Assembly code

```
            ORG     0000H
            LJMP    MAIN
            ORG     0013H
            LJMP    INT1ISR

            ORG     0100H
INT1ISR:
            JB      INT1,RISING     ;judging rising and falling edges
            CPL     P1.0            ;test the port
    RETI
RISING:
            CPL     P1.1            ;test the port
    RETI

MAIN:
            MOV     SP,#3FH

            CLR     IT1
            SETB    EX1
            SETB    EA
            JMP     $
```

```
        END
```

C code

```
#include "reg51.h"
#include "intrins.h"

sbit    P10     =   P1^0;
sbit    P11     =   P1^1;

void INT1_Isr() interrupt 2
{
    if (INT1)                   //judging rising and falling edges
    {
        P10 = !P10;             //test the port
    }
    else
    {
        P11 = !P11;             //test the port
    }
}

void main()
{
    IT1 = 0;
    EX1 = 1;
    EA = 1;

    while (1);
}
```

12.5.4 INT1 interrupt(falling edge)

Assembly code

```
            ORG     0000H
            LJMP    MAIN
            ORG     0013H
            LJMP    INT1ISR

            ORG     0100H
INT1ISR:
            CPL     P1.0            ;test the port
    RETI

MAIN:
            MOV     SP,#3FH

            SETB    IT1             ;enable the rising and falling interrupt of INT1

            SETB    EX1             ;enable INT1 interrupt
            SETB    EA
            JMP     $

    END
```

C code

```
#include "reg51.h"
#include "intrins.h"

sbit        P10             =       P1^0;

void INT1_Isr() interrupt 2
{
        P10 = !P10;                             //test the port
}

void main()
{
        IT1 = 1;                                //enable the falling interrupt of INT1
        EX1 = 1;                                //enable INT1interrupt
        EA = 1;

        while (1);
}
```

12.5.5 INT2 interrupt(falling edge)

Assembly code

```
INTCLKO         DATA            8FH
EX2             EQU             10H
EX3             EQU             20H
EX4             EQU             40H

                ORG             0000H
                LJMP            MAIN
                ORG             0053H
                LJMP            INT2ISR

                ORG             0100H
INT2ISR:
                CPL             P1.0                    ;test the port
        RETI

MAIN:
                MOV             SP,#3FH

                MOV             INTCLKO,#EX2            ;enable INT2 interrupt
                JMP             $

        END
```

C code

```
#include "reg51.h"
#include "intrins.h"

sfr         INTCLKO         =       0x8f;
#define     EX2                     0x10
```

```
#define     EX3             0x20
#define     EX4             0x40
sbit        P10         =   P1^0;

void INT2_Isr() interrupt 10
{
    P10 = !P10;                     //test the port
}

void main()
{
    INTCLKO = EX2;
    EA = 1;

    while (1);
}
```

12.5.6 INT3interrupt(falling edge)

Assembly code

```
INTCLKO     DATA    8FH
EX2         EQU     10H
EX3         EQU     20H
EX4         EQU     40H

            ORG     0000H
            LJMP    MAIN
            ORG     005BH
            LJMP    INT3ISR

            ORG     0100H
INT3ISR:
            CPL     P1.0            ;test the port
    RETI

MAIN:
            MOV     SP,#3FH

            MOV     INTCLKO,#EX3    ;enable INT3 interrupt
            SETB    EA
            JMP     $

    END
```

C code

```
#include "reg51.h"
#include "intrins.h"

sfr         INTCLKO     =   0x8f;
#define     EX2             0x10
#define     EX3             0x20
#define     EX4             0x40
sbit        P10         =   P1^0;
```

```
void INT3_Isr() interrupt 11
{
    P10 = !P10;                     //test the port
}

void main()
{
    INTCLKO = EX3;                  //enable INT3 interrupt

    while (1);
}
```

12.5.7 INT4 interrupt(falling)

Assembly code

```
INTCLKO     DATA    8FH
EX2         EQU     10H
EX3         EQU     20H
EX4         EQU     40H

            ORG     0000H
            LJMP    MAIN
            ORG     0083H
            LJMP    INT4ISR

            ORG     0100H
INT4ISR:
            CPL     P1.0                ;test the port
    RETI

MAIN:
            MOV     SP,#3FH

            MOV     INTCLKO,#EX4        ;enable INT4 interrupt
            SETB    EA
            JMP     $

    END
```

C code

```
#include "reg51.h"
#include "intrins.h"

sfr     INTCLKO     =   0x8f;
#define EX2             0x10
#define EX3             0x20
#define EX4             0x40
sbit    P10         =   P1^0;

void INT4_Isr() interrupt 16
{
    P10 = !P10;                     //test the port
}
```

```
void main()
{
    INTCLKO = EX4;              //enable INT4 interrupt
    EA = 1;

    while (1);
}
```

12.5.8 timer0 interrupt

Assembly code

```
            ORG     0000H
            LJMP    MAIN
            ORG     000BH
            LJMP    TM0ISR

            ORG     0100H
TM0ISR:
            CPL     P1.0                ;test the port
    RETI

MAIN:
            MOV     SP,#3FH

            MOV     TMOD,#00H
            MOV     TL0,#66H            ;65536-11.0592M/12/1000
            MOV     TH0,#0FCH
            SETB    TR0                 ;start timer
            SETB    ET0                 ;enable timer interrupt
            SETB    EA

            JMP     $

    END
```

C code

```
#include "reg51.h"
#include "intrins.h"


sbit    P10     =   P1^0;

void TM0_Isr() interrupt 1
{
    P10 = !P10;                 //test the port
}

void main()
{
    TMOD = 0x00;
    TL0 = 0x66;                 //65536-11.0592M/12/1000
    TH0 = 0xfc;
```

```
    TR0 = 1;                    //start timer
    ET0 = 1;                    //enable timer interrupt
    EA = 1;

    while (1);
}
```

12.5.9 Timer1 interrupt

Assembly code

```
            ORG     0000H
            LJMP    MAIN
            ORG     001BH
            LJMP    TM1ISR

            ORG     0100H
TM1ISR:
            CPL     P1.0                ;test the port
            RETI

MAIN:
            MOV     SP,#3FH

            MOV     TMOD,#00H
            MOV     TL1,#66H            ;65536-11.0592M/12/1000
            MOV     TH1,#0FCH
            SETB    TR1                 ;start timer
            SETB    ET1                 ;enable timer interrupt
            SETB    EA

            JMP     $

            END
```

C code

```
#include "reg51.h"
#include "intrins.h"


sbit    P10     =   P1^0;

void TM1_Isr() interrupt 3
{
    P10 = !P10;                 //test the port
}

void main()
{
    TMOD = 0x00;
    TL1 = 0x66;                 //65536-11.0592M/12/1000
    TH1 = 0xfc;
    TR1 = 1;                    //start timer
    ET1 = 1;                    //enable timer interrupt
    EA = 1;
```

```
    while (1);
}
```

12.5.10 Timer2 interrupt

Assembly code

```
T2L         DATA    0D7H
T2H         DATA    0D6H
AUXR        DATA    8EH
IE2         DATA    0AFH
ET2         EQU     04H
AUXINTIF    DATA    0EFH
T2IF        EQU     01H

            ORG     0000H
            LJMP    MAIN
            ORG     0063H
            LJMP    TM2ISR

            ORG     0100H
TM2ISR:
            CPL     P1.0                ;test the port
            ANL     AUXINTIF,#NOT T2IF  ;clear the symbol of interrupt
            RETI

MAIN:
            MOV     SP,#3FH

            MOV     T2L,#66H            ;65536-11.0592M/12/1000
            MOV     T2H,#0FCH
            MOV     AUXR,#10H           ;start timer
            MOV     IE2,#ET2            ;enable timer interrupt
            SETB    EA

            JMP     $

            END
```

C code

```
#include "reg51.h"
#include "intrins.h"


sfr     T2L         =   0xd7;
sfr     T2H         =   0xd6;
sfr     AUXR        =   0x8e;
sfr     IE2         =   0xaf;
#define ET2             0x04
sfr     AUXINTIF    =   0xef;
#define T2IF            0x01

sbit    P10         =   P1^0;
```

```
void TM2_Isr() interrupt 12
{
    P10 = !P10;                 //test the port
    AUXINTIF &= ~T2IF;          //clear the symbol of interrupt
}

void main()
{
    T2L = 0x66;                 //65536-11.0592M/12/1000
    T2H = 0xfc;
    AUXR = 0x10;                //start timer
    IE2 = ET2;                  //enable timer interrupt
    EA = 1;

    while (1);
}
```

12.5.11 Timer3 interrupt

Assembly code

```
T3L         DATA    0D5H
T3H         DATA    0D4H
T4T3M       DATA    0D1H
IE2         DATA    0AFH
ET3         EQU     20H
AUXINTIF    DATA    0EFH
T3IF        EQU     02H

            ORG     0000H
            LJMP    MAIN
            ORG     009BH
            LJMP    TM3ISR

            ORG     0100H
TM3ISR:
            CPL     P1.0                ;test the port
            ANL     AUXINTIF,#NOT T3IF  ;clear the symbol of interrupt
            RETI

MAIN:
            MOV     SP,#3FH

            MOV     T3L,#66H            ;65536-11.0592M/12/1000
            MOV     T3H,#0FCH
            MOV     T4T3M,#08H          ;start timer
            MOV     IE2,#ET3            ;enable timer interrupt
            SETB    EA

            JMP     $

            END
```

C code

```
#include "reg51.h"
#include "intrins.h"


sfr         T3L         =   0xd5;
sfr         T3H         =   0xd4;
sfr         T4T3M       =   0xd1;
sfr         IE2         =   0xaf;
#define     ET3             0x20
sfr         AUXINTIF    =   0xef;
#define     T3IF            0x02

sbit        P10         =   P1^0;

void TM3_Isr() interrupt 19
{
    P10 = !P10;                     //test the port
    AUXINTIF &= ~T3IF;              //clear the symbol of interrupt
}

void main()
{
    T3L = 0x66;                     //65536-11.0592M/12/1000
    T3H = 0xfc;
    T4T3M = 0x08;                   //start timer
    IE2 = ET3;                      //enable timer interrupt
    EA = 1;

    while (1);
}
```

12.5.12 Timer4 interrupt

Assembly code

```
T4L         DATA    0D3H
T4H         DATA    0D2H
T4T3M       DATA    0D1H
IE2         DATA    0AFH
ET4         EQU     40H
AUXINTIF    DATA    0EFH
T4IF        EQU     04H

            ORG     0000H
            LJMP    MAIN
            ORG     00A3H
            LJMP    TM4ISR

            ORG     0100H
TM4ISR:
            CPL     P1.0                ;test the port
            ANL     AUXINTIF,#NOT T4IF  ;clear the symbol of interrupt
            RETI

MAIN:
            MOV     SP,#3FH
```

```
        MOV     T4L,#66H        ;65536-11.0592M/12/1000
        MOV     T4H,#0FCH
        MOV     T4T3M,#80H      ;start timer
        MOV     IE2,#ET4        ;enable timer interrupt
        SETB    EA

        JMP     $

        END
```

C code

```
#include "reg51.h"
#include "intrins.h"


sfr     T4L         =   0xd3;
sfr     T4H         =   0xd2;
sfr     T4T3M       =   0xd1;
sfr     IE2         =   0xaf;
#define ET4             0x40
sfr     AUXINTIF    =   0xef;
#define T4IF            0x04

sbit    P10         =   P1^0;

void TM4_Isr() interrupt 20
{
    P10 = !P10;                 //test the port
    AUXINTIF &= ~T4IF;          //clear the symbol of interrupt
}

void main()
{
    T4L = 0x66;                 //65536-11.0592M/12/1000
    T4H = 0xfc;
    T4T3M = 0x80;               //start timer
    IE2 = ET4;                  //enable timer interrupt
    EA = 1;

    while (1);
}
```

12.5.13 UART1 interrupt

Assembly code

```
T2L     DATA    0D7H
T2H     DATA    0D6H
AUXR    DATA    8EH

        ORG     0000H
        LJMP    MAIN
        ORG     0023H
        LJMP    UART1ISR
```

```
                ORG     0100H
UART1ISR:
                JNB     TI,CHECKRI
                CLR     TI                      ;clear the symbol of interrupt
                CPL     P1.0                    ;test the port
CHECKRI:
                JNB     RI,ISREXIT
                CLR     RI                      ;clear the symbol of interrupt
                CPL     P1.1                    ;test the port
ISREXIT:
                RETI

MAIN:
                MOV     SP,#3FH

                MOV     SCON,#50H
                MOV     T2L,#0E8H               ;65536-11059200/115200/4=0FFE8H
                MOV     T2H,#0FFH
                MOV     AUXR,#15H               ;start timer
                SETB    ES                      ;enable serial port interrupt
                SETB    EA
                MOV     SBUF,#5AH               ;send the date of test

                JMP     $

                END
```

C code

```
#include "reg51.h"
#include "intrins.h"


sfr     T2L     =   0xd7;
sfr     T2H     =   0xd6;
sfr     AUXR    =   0x8e;

sbit    P10     =   P1^0;
sbit    P11     =   P1^1;

void UART1_Isr() interrupt 4
{
    if (TI)
    {
        TI = 0;             //clear the symbol of interrupt
        P10 = !P10;         //test the port
    }
    if (RI)
    {
        RI = 0;             //clear the symbol of interrupt
        P11 = !P11;         //test the port
    }
}

void main()
{
    SCON = 0x50;
```

```
    T2L = 0xe8;                 //65536-11059200/115200/4=0FFE8H
    T2H = 0xff;
    AUXR = 0x15;                //start timer
    ES = 1;                     //enable serial port interrupt
    EA = 1;
    SBUF = 0x5a;                //send the date of test

    while (1);
}
```

12.5.14 UART2 interrupt

Assembly code

```
T2L         DATA    0D7H
T2H         DATA    0D6H
AUXR        DATA    8EH
S2CON       DATA    9AH
S2BUF       DATA    9BH
IE2         DATA    0AFH
ES2         EQU     01H

            ORG     0000H
            LJMP    MAIN
            ORG     0043H
            LJMP    UART2ISR

            ORG     0100H
UART2ISR:
            PUSH    ACC
            PUSH    PSW
            MOV     A,S2CON
            JNB     ACC.1,CHECKRI
            ANL     S2CON,#NOT 02H      ;clear the symbol of interrupt
            CPL     P1.2                ;test the port
CHECKRI:
            MOV     A,S2CON
            JNB     ACC.0,ISREXIT
            ANL     S2CON,#NOT 01H      ;clear the symbol of interrupt
            CPL     P1.3                ;test the port
ISREXIT:
            POP     PSW
            POP     ACC
            RETI

MAIN:
            MOV     SP,#3FH

            MOV     S2CON,#10H
            MOV     T2L,#0E8H           ;65536-11059200/115200/4=0FFE8H
            MOV     T2H,#0FFH
            MOV     AUXR,#14H           ;start timer
            MOV     IE2,#ES2            ;enable serial port interrupt
            SETB    EA
            MOV     S2BUF,#5AH          ;send the date of test
```

```
                JMP     $

                END
```

C code

```
#include "reg51.h"
#include "intrins.h"


sfr     T2L     =   0xd7;
sfr     T2H     =   0xd6;
sfr     AUXR    =   0x8e;
sfr     S2CON   =   0x9a;
sfr     S2BUF   =   0x9b;
sfr     IE2     =   0xaf;
#define ES2         0x01

sbit    P12     =   P1^2;
sbit    P13     =   P1^3;

void UART2_Isr() interrupt 8
{
    if (S2CON & 0x02)
    {
        S2CON &= ~0x02;         //clear the symbol of interrupt
        P12 = !P12;             //test the port
    }
    if (S2CON & 0x01)
    {
        S2CON &= ~0x01;         //clear the symbol of interrupt
        P13 = !P13;             //test the port
    }
}

void main()
{
    S2CON = 0x10;
    T2L = 0xe8;                 //65536-11059200/115200/4=0FFE8H
    T2H = 0xff;
    AUXR = 0x14;                //start timer
    IE2 = ES2;                  //enable serial port interrupt
    EA = 1;
    S2BUF = 0x5a;               //send the date of test

    while (1);
}
```

12.5.15 UART3 interrupt

Assembly code

```
T2L     DATA    0D7H
T2H     DATA    0D6H
AUXR    DATA    8EH
S3CON   DATA    0ACH
```

```
S3BUF       DATA    0ADH
IE2         DATA    0AFH
ES3         EQU     08H

            ORG     0000H
            LJMP    MAIN
            ORG     008BH
            LJMP    UART3ISR

            ORG     0100H
UART3ISR:
            PUSH    ACC
            PUSH    PSW
            MOV     A,S3CON
            JNB     ACC.1,CHECKRI
            ANL     S3CON,#NOT 02H      ;clear the symbol of interrupt
            CPL     P1.0                ;test the port
CHECKRI:
            MOV     A,S3CON
            JNB     ACC.0,ISREXIT
            ANL     S3CON,#NOT 01H      ;clear the symbol of interrupt
            CPL     P1.1                ;test the port
ISREXIT:
            POP     PSW
            POP     ACC
            RETI

MAIN:
            MOV     SP,#3FH

            MOV     S3CON,#10H
            MOV     T2L,#0E8H           ;65536-11059200/115200/4=0FFE8H
            MOV     T2H,#0FFH
            MOV     AUXR,#14H           ;start timer
            MOV     IE2,#ES3            ;enable serial port interrupt
            SETB    EA
            MOV     S3BUF,#5AH          ;send the date of test

            JMP     $

            END
```

C code

```
#include "reg51.h"
#include "intrins.h"


sfr     T2L     =   0xd7;
sfr     T2H     =   0xd6;
sfr     AUXR    =   0x8e;
sfr     S3CON   =   0xac;
sfr     S3BUF   =   0xad;
sfr     IE2     =   0xaf;
#define ES3         0x08

sbit    P10     =   P1^0;
sbit    P11     =   P1^1;
```

```
void UART3_Isr() interrupt 17
{
    if (S3CON & 0x02)
    {
        S3CON &= ~0x02;         //clear the symbol of interrupt
        P10 = !P10;             //test the port
    }
    if (S3CON & 0x01)
    {
        S3CON &= ~0x01;         //clear the symbol of interrupt
        P11 = !P11;             //test the port
    }
}

void main()
{
    S3CON = 0x10;
    T2L = 0xe8;                 //65536-11059200/115200/4=0FFE8H
    T2H = 0xff;
    AUXR = 0x14;                //start timer
    IE2 = ES3;                  //enable serial port interrupt
    EA = 1;
    S3BUF = 0x5a;               //send the date of test

    while (1);
}
```

12.5.16 UART4 interrupt

Assembly code

```
T2L         DATA    0D7H
T2H         DATA    0D6H
AUXR        DATA    8EH
S4CON       DATA    084H
S4BUF       DATA    085H
IE2         DATA    0AFH
ES4         EQU     10H

            ORG     0000H
            LJMP    MAIN
            ORG     0093H
            LJMP    UART4ISR

            ORG     0100H
UART4ISR:
            PUSH    ACC
            PUSH    PSW
            MOV     A,S4CON
            JNB     ACC.1,CHECKRI
            ANL     S4CON,#NOT 02H      ;clear the symbol of interrupt
            CPL     P1.0                ;test the port
CHECKRI:
            MOV     A,S4CON
            JNB     ACC.0,ISREXIT
```

```
                ANL     S4CON,#NOT 01H          ;clear the symbol of interrupt
                CPL     P1.1                    ;test the port
ISREXIT:
                POP     PSW
                POP     ACC
                RETI

MAIN:
                MOV     SP,#3FH

                MOV     S4CON,#10H
                MOV     T2L,#0E8H               ;65536-11059200/115200/4=0FFE8H
                MOV     T2H,#0FFH
                MOV     AUXR,#14H               ;start timer
                MOV     IE2,#ES4                ;enable serial port interrupt
                SETB    EA
                MOV     S4BUF,#5AH              ;send the date of test

                JMP     $

                END
```

C code

```
#include "reg51.h"
#include "intrins.h"


sfr     T2L     =   0xd7;
sfr     T2H     =   0xd6;
sfr     AUXR    =   0x8e;
sfr     S4CON   =   0x84;
sfr     S4BUF   =   0x85;
sfr     IE2     =   0xaf;
#define ES4         0x10

sbit    P10     =   P1^0;
sbit    P11     =   P1^1;

void UART4_Isr() interrupt 18
{
    if (S4CON & 0x02)
    {
        S4CON &= ~0x02;         //clear the symbol of interrupt
        P10 = !P10;             //test the port
    }
    if (S4CON & 0x01)
    {
        S4CON &= ~0x01;         //clear the symbol of interrupt
        P11 = !P11;             //test the port
    }
}

void main()
{
    S4CON = 0x10;
    T2L = 0xe8;                 //65536-11059200/115200/4=0FFE8H
    T2H = 0xff;
```

```
    AUXR = 0x14;                    //start timer
    IE2 = ES4;                      //enable serial port interrupt
    EA = 1;
    S4BUF = 0x5a;                   //send the date of test

    while (1);
}
```

12.5.17 ADC interrupt

Assembly code

```
ADC_CONTR   DATA    0BCH
ADC_RES     DATA    0BDH
ADC_RESL    DATA    0BEH
ADCCFG      DATA    0DEH
EADC        BIT     IE.5

            ORG     0000H
            LJMP    MAIN
            ORG     002BH
            LJMP    ADCISR

            ORG     0100H
ADCISR:
            ANL     ADC_CONTR,#NOT 20H      ;clear the symbol of interrupt
            MOV     P0,ADC_RES              ;test the port
            MOV     P2,ADC_RESL             ;test the port
            RETI

MAIN:
            MOV     SP,#3FH

            MOV     ADCCFG,#00H
            MOV     ADC_CONTR,#0C0H         ;start and enable the module of ADC
            SETB    EADC                    ;enable ADC interrupt
            SETB    EA

            JMP     $

            END
```

C code

```
#include "reg51.h"
#include "intrins.h"

sfr     ADC_CONTR   =   0xbc;
sfr     ADC_RES     =   0xbd;
sfr     ADC_RESL    =   0xbe;
sfr     ADCCFG      =   0xde;
sbit    EADC        =   IE^5;

void ADC_Isr() interrupt 5
{
    ADC_CONTR &= ~0x20;             //clear the symbol of interrupt
    P0 = ADC_RES;                   //test the port
```

```
    P2 = ADC_RESL;                  //test the port
}

void main()
{
    ADCCFG = 0x00;
    ADC_CONTR = 0xc0;               //start and enable the module of ADC
    EADC = 1;                       //enable ADC interrupt
    EA = 1;

    while (1);
}
```

12.5.18 LVD interrupt

Assembly code

```
RSTCFG      DATA    0FFH
ENLVR       EQU     40H             ;RSTCFG.6
LVD2V2      EQU     00H             ;LVD@2.2V
LVD2V4      EQU     01H             ;LVD@2.4V
LVD2V7      EQU     02H             ;LVD@2.7V
LVD3V0      EQU     03H             ;LVD@3.0V
ELVD        BIT     IE.6
LVDF        EQU     20H             ;PCON.5

            ORG     0000H
            LJMP    MAIN
            ORG     0033H
            LJMP    LVDISR

            ORG     0100H
LVDISR:
            ANL     PCON,#NOT LVDF  ;clear the symbol of interrupt
            CPL     P1.0            ;test the port
            RETI

MAIN:
            MOV     SP,#3FH

            ANL     PCON,#NOT LVDF  ;clear the symbol of interrupt
            MOV     RSTCFG,# LVD3V0
            SETB    ELVD            ;enableLVDinterrupt
            SETB    EA
            JMP     $

            END
```

C code

```
#include "reg51.h"
#include "intrins.h"

sfr     RSTCFG      =   0xff;
#define ENLVR           0x40    //RSTCFG.6
#define LVD2V2          0x00    //LVD@2.2V
#define LVD2V4          0x01    //LVD@2.4V
```

```
#define    LVD2V7        0x02    //LVD@2.7V
#define    LVD3V0        0x03    //LVD@3.0V
sbit       ELVD     =    IE^6;
#define    LVDF          0x20    //PCON.5
sbit       P10      =    P1^0;

void LVD_Isr() interrupt 6
{
    PCON &= ~LVDF;               //clear the symbol of interrupt
    P10 = !P10;                  //test the port
}

void main()
{
    PCON &= ~LVDF;               //clear the symbol of interrupt
    RSTCFG = LVD3V0;             //
    ELVD = 1;                    //enable LVD interrupt
    EA = 1;

    while (1);
}
```

12.5.19 PCA interrupt

Assembly code

```
CCON        DATA    0D8H
CF          BIT     CCON.7
CR          BIT     CCON.6
CCF3        BIT     CCON.3
CCF2        BIT     CCON.2
CCF1        BIT     CCON.1
CCF0        BIT     CCON.0
CMOD        DATA    0D9H
CL          DATA    0E9H
CH          DATA    0F9H
CCAPM0      DATA    0DAH
CCAP0L      DATA    0EAH
CCAP0H      DATA    0FAH
PCA_PWM0    DATA    0F2H
CCAPM1      DATA    0DBH
CCAP1L      DATA    0EBH
CCAP1H      DATA    0FBH
PCA_PWM1    DATA    0F3H
CCAPM2      DATA    0DCH
CCAP2L      DATA    0ECH
CCAP2H      DATA    0FCH
PCA_PWM2    DATA    0F4H
CCAPM3      DATA    0DDH
CCAP3L      DATA    0EDH
CCAP3H      DATA    0FDH
PCA_PWM3    DATA    0F5H

            ORG     0000H
            LJMP    MAIN
            ORG     003BH
```

```
                LJMP    PCAISR

                ORG     0100H
PCAISR:
                JNB     CF,ISREXIT
                CLR     CF              ;clear the symbol of interrupt
                CPL     P1.0            ;test the port
ISREXIT:
                RETI

MAIN:
                MOV     SP,#3FH

                MOV     CCON,#00H
                MOV     CMOD,#09H
                SETB    CR
                SETB    EA

                JMP     $

                END
```

C code

```
#include "reg51.h"
#include "intrins.h"


sfr     CCON        =   0xd8;
sbit    CF          =   CCON^7;
sbit    CR          =   CCON^6;
sbit    CCF3        =   CCON^3;
sbit    CCF2        =   CCON^2;
sbit    CCF1        =   CCON^1;
sbit    CCF0        =   CCON^0;
sfr     CMOD        =   0xd9;
sfr     CL          =   0xe9;
sfr     CH          =   0xf9;
sfr     CCAPM0      =   0xda;
sfr     CCAP0L      =   0xea;
sfr     CCAP0H      =   0xfa;
sfr     PCA_PWM0    =   0xf2;
sfr     CCAPM1      =   0xdb;
sfr     CCAP1L      =   0xeb;
sfr     CCAP1H      =   0xfb;
sfr     PCA_PWM1    =   0xf3;
sfr     CCAPM2      =   0xdc;
sfr     CCAP2L      =   0xec;
sfr     CCAP2H      =   0xfc;
sfr     PCA_PWM2    =   0xf4;
sfr     CCAPM3      =   0xdd;
sfr     CCAP3L      =   0xed;
sfr     CCAP3H      =   0xfd;
sfr     PCA_PWM3    =   0xf5;

sbit    P10         =   P1^0;

void PCA_Isr() interrupt 7
```

```
{
    if (CF)
    {
        CF = 0;                 //clear the symbol of interrupt
        P10 = !P10;             //test the port
    }
}

void main()
{
    CMOD = 0x09;
    CCON = 0x00;
    CR = 1;
    EA = 1;

    while (1);
}
```

12.5.20 SPI interrupt

Assembly code

```
SPSTAT      DATA    0CDH
SPCTL       DATA    0CEH
SPDAT       DATA    0CFH
IE2         DATA    0AFH
ESPI        EQU     02H

            ORG     0000H
            LJMP    MAIN
            ORG     004BH
            LJMP    SPIISR

            ORG     0100H
SPIISR:
            MOV     SPSTAT,#0C0H        ;clear the symbol of interrupt
            CPL     P1.0                ;test the port
            RETI

MAIN:
            MOV     SP,#3FH

            MOV     SPCTL,#50H          ;enable SPI
            MOV     SPSTAT,#0C0H        ;clear the symbol of interrupt
            MOV     IE2,#ESPI           ;enable SPI interrupt
            SETB    EA
            MOV     SPDAT,#5AH          ;send the date of test

            JMP     $

            END
```

C code

```
#include "reg51.h"
#include "intrins.h"
```

```
sfr       SPSTAT    =   0xcd;
sfr       SPCTL     =   0xce;
sfr       SPDAT     =   0xcf;
sfr       IE2       =   0xaf;
#define   ESPI          0x02

sbit      P10       =   P1^0;

void SPI_Isr() interrupt 9
{
      SPSTAT = 0xc0;              //clear the symbol of interrupt
      P10 = !P10;                 //test the port
}

void main()
{
      SPCTL = 0x50;
      SPSTAT = 0xc0;              //clear the symbol of interrupt
      IE2 = ESPI;                 //enable SPI interrupt
      EA = 1;
      SPDAT = 0x5a;               //send the date of test

      while (1);
}
```

12.5.21 CMP interrupt

Assembly code

```
CMPCR1    DATA    0E6H
CMPCR2    DATA    0E7H

          ORG     0000H
          LJMP    MAIN
          ORG     00ABH
          LJMP    CMPISR

          ORG     0100H
CMPISR:
          ANL     CMPCR1,#NOT 40H     ;clear the symbol of interrupt
          CPL     P1.0                ;test the port
          RETI

MAIN:
          MOV     SP,#3FH

          MOV     CMPCR2,#00H
          MOV     CMPCR1,#80H
          ORL     CMPCR1,#30H
          ANL     CMPCR1,#NOT 08H
          ORL     CMPCR1,#04H
          ORL     CMPCR1,#02H
          SETB    EA

          JMP     $

          END
```

C code

```
#include "reg51.h"
#include "intrins.h"

sfr     CMPCR1    =    0xe6;
sfr     CMPCR2    =    0xe7;

sbit    P10       =    P1^0;

void CMP_Isr() interrupt 21
{
    CMPCR1 &= ~0x40;            //clear the symbol of interrupt
    P10 = !P10;                 //test the port
}

void main()
{
    CMPCR2 = 0x00;
    CMPCR1 = 0x80;
    CMPCR1 |= 0x30;
    CMPCR1 &= ~0x08;
    CMPCR1 |= 0x04;
    CMPCR1 |= 0x02;
    EA = 1;

    while (1);
}
```

12.5.22 PWM interrupt

Assembly code

```
P_SW2       DATA    0BAH

PWMCFG      DATA    0F1H
PWMIF       DATA    0F6H
PWMFDCR     DATA    0F7H
PWMCR       DATA    0FEH
PWMCH       XDATA   0FFF0H
PWMCL       XDATA   0FFF1H
PWMCKS      XDATA   0FFF2H
TADCPH      XDATA   0FFF3H
TADCPL      XDATA   0FFF4H
PWM0T1H     XDATA   0FF00H
PWM0T1L     XDATA   0FF01H
PWM0T2H     XDATA   0FF02H
PWM0T2L     XDATA   0FF03H
PWM0CR      XDATA   0FF04H
PWM0HLD     XDATA   0FF05H
PWM1T1H     XDATA   0FF10H
PWM1T1L     XDATA   0FF11H
PWM1T2H     XDATA   0FF12H
PWM1T2L     XDATA   0FF13H
PWM1CR      XDATA   0FF14H
```

```
PWM1HLD     XDATA     0FF15H
PWM2T1H     XDATA     0FF20H
PWM2T1L     XDATA     0FF21H
PWM2T2H     XDATA     0FF22H
PWM2T2L     XDATA     0FF23H
PWM2CR      XDATA     0FF24H
PWM2HLD     XDATA     0FF25H
PWM3T1H     XDATA     0FF30H
PWM3T1L     XDATA     0FF31H
PWM3T2H     XDATA     0FF32H
PWM3T2L     XDATA     0FF33H
PWM3CR      XDATA     0FF34H
PWM3HLD     XDATA     0FF35H
PWM4T1H     XDATA     0FF40H
PWM4T1L     XDATA     0FF41H
PWM4T2H     XDATA     0FF42H
PWM4T2L     XDATA     0FF43H
PWM4CR      XDATA     0FF44H
PWM4HLD     XDATA     0FF45H
PWM5T1H     XDATA     0FF50H
PWM5T1L     XDATA     0FF51H
PWM5T2H     XDATA     0FF52H
PWM5T2L     XDATA     0FF53H
PWM5CR      XDATA     0FF54H
PWM5HLD     XDATA     0FF55H
PWM6T1H     XDATA     0FF60H
PWM6T1L     XDATA     0FF61H
PWM6T2H     XDATA     0FF62H
PWM6T2L     XDATA     0FF63H
PWM6CR      XDATA     0FF64H
PWM6HLD     XDATA     0FF65H
PWM7T1H     XDATA     0FF70H
PWM7T1L     XDATA     0FF71H
PWM7T2H     XDATA     0FF72H
PWM7T2L     XDATA     0FF73H
PWM7CR      XDATA     0FF74H
PWM7HLD     XDATA     0FF75H

            ORG       0000H
            LJMP      MAIN
            ORG       00B3H
            LJMP      PWMISR
            ORG       00BBH
            LJMP      PWMFDISR

            ORG       0100H
PWMISR:
            PUSH      ACC
            PUSH      PSW
            MOV       A,PWMCFG
            JNB       ACC.7,ISREXIT
            ANL       PWMCFG,#NOT 80H        ;clear the symbol of interrupt
            CPL       P1.0                   ;test the port
ISREXIT:
            POP       PSW
            POP       ACC
            RETI
```

```
PWMFDISR:
        ANL     PWMFDCR,#NOT 01H        ;clear the symbol of interrupt
        CPL     P1.1                    ;test the port
        RETI

MAIN:
        MOV     SP,#3FH

        MOV     P_SW2,#80H
        MOV     A,#0FH
        MOV     DPTR,#PWMCKS
        MOVX    @DPTR,A
        MOV     A,#01H
        MOV     DPTR,#PWMCH
        MOVX    @DPTR,A
        MOV     A,#00H
        MOV     DPTR,#PWMCL
        MOVX    @DPTR,A
        MOV     P_SW2,#00H

        MOV     PWMFDCR,#7AH
        MOV     PWMCR,#0C0H
        SETB    EA

        JMP     $

        END
```

C code

```
#include "reg51.h"
#include "intrins.h"


sfr     P_SW2       =   0xba;
sfr     PWMCFG      =   0xf1;
sfr     PWMIF       =   0xf6;
sfr     PWMFDCR     =   0xf7;
sfr     PWMCR       =   0xfe;

#define PWMC        (*(unsigned int volatile xdata *)0xfff0)
#define PWMCKS      (*(unsigned char volatile xdata *)0xfff2)
#define TADCP       (*(unsigned int volatile xdata *)0xfff3)
#define PWM0T1      (*(unsigned int volatile xdata *)0xff00)
#define PWM0T2      (*(unsigned int volatile xdata *)0xff02)
#define PWM0CR      (*(unsigned char volatile xdata *)0xff04)
#define PWM0HLD     (*(unsigned char volatile xdata *)0xff05)
#define PWM1T1      (*(unsigned int volatile xdata *)0xff10)
#define PWM1T2      (*(unsigned int volatile xdata *)0xff12)
#define PWM1CR      (*(unsigned char volatile xdata *)0xff14)
#define PWM1HLD     (*(unsigned char volatile xdata *)0xff15)
#define PWM2T1      (*(unsigned int volatile xdata *)0xff20)
#define PWM2T2      (*(unsigned int volatile xdata *)0xff22)
#define PWM2CR      (*(unsigned char volatile xdata *)0xff24)
#define PWM2HLD     (*(unsigned char volatile xdata *)0xff25)
#define PWM3T1      (*(unsigned int volatile xdata *)0xff30)
#define PWM3T2      (*(unsigned int volatile xdata *)0xff32)
#define PWM3CR      (*(unsigned char volatile xdata *)0xff34)
```

```
#define     PWM3HLD         (*(unsigned char volatile xdata *)0xff35)
#define     PWM4T1          (*(unsigned int volatile xdata *)0xff40)
#define     PWM4T2          (*(unsigned int volatile xdata *)0xff42)
#define     PWM4CR          (*(unsigned char volatile xdata *)0xff44)
#define     PWM4HLD         (*(unsigned char volatile xdata *)0xff45)
#define     PWM5T1          (*(unsigned int volatile xdata *)0xff50)
#define     PWM5T2          (*(unsigned int volatile xdata *)0xff52)
#define     PWM5CR          (*(unsigned char volatile xdata *)0xff54)
#define     PWM5HLD         (*(unsigned char volatile xdata *)0xff55)
#define     PWM6T1          (*(unsigned int volatile xdata *)0xff60)
#define     PWM6T2          (*(unsigned int volatile xdata *)0xff62)
#define     PWM6CR          (*(unsigned char volatile xdata *)0xff64)
#define     PWM6HLD         (*(unsigned char volatile xdata *)0xff65)
#define     PWM7T1          (*(unsigned int volatile xdata *)0xff70)
#define     PWM7T2          (*(unsigned int volatile xdata *)0xff72)
#define     PWM7CR          (*(unsigned char volatile xdata *)0xff74)
#define     PWM7HLD         (*(unsigned char volatile xdata *)0xff75)

sbit        P10         =   P1^0;
sbit        P11         =   P1^1;

void PWM_Isr() interrupt 22
{
    if (PWMCFG & 0x80)
    {
        PWMCFG &= ~0x80;        //clear the symbol of interrupt
        P10 = !P10;             //test the port
    }
}

void PWMFD_Isr() interrupt 23
{
    PWMFDCR &= ~0x01;           //clear the symbol of interrupt
    P11 = !P11;                 //test the port
}

void main()
{
    P_SW2 = 0x80;
    PWMCKS = 0x0f;
    PWMC = 0x0100;
    P_SW2 = 0x00;

    PWMFDCR = 0x7a;
    PWMCR = 0xc0;
    EA = 1;

    while (1);
}
```

12.5.23 I2C interrupt

Assembly code

```
P_SW2       DATA        0BAH

I2CCFG      XDATA       0FE80H
```

```
I2CMSCR     XDATA   0FE81H
I2CMSST     XDATA   0FE82H
I2CSLCR     XDATA   0FE83H
I2CSLST     XDATA   0FE84H
I2CSLADR    XDATA   0FE85H
I2CTXD      XDATA   0FE86H
I2CRXD      XDATA   0FE87H

            ORG     0000H
            LJMP    MAIN
            ORG     00C3H
            LJMP    I2CISR

            ORG     0100H
I2CISR:
            PUSH    ACC
            PUSH    DPL
            PUSH    DPH
            PUSH    P_SW2
            MOV     P_SW2,#80H
            MOV     DPTR,#I2CMSST
            MOVX    A,@DPTR
            ANL     A,#NOT 40H          ;clear the symbol of interrupt
            MOVX    @DPTR,A
            CPL     P1.0                ;test the port
            POP     P_SW2
            POP     DPH
            POP     DPL
            POP     ACC
            RETI

MAIN:
            MOV     SP,#3FH

            MOV     P_SW2,#80H
            MOV     A,#0C0H             ;enable I2C
            MOV     DPTR,#I2CCFG
            MOVX    @DPTR,A
            MOV     A,#80H              ;enable I2C interrupt
            MOV     DPTR,#I2CMSCR
            MOVX    @DPTR,A
            MOV     P_SW2,#00H
            SETB    EA

            MOV     P_SW2,#80H
            MOV     A,#081H
            MOV     DPTR,#I2CMSCR
            MOVX    @DPTR,A
            MOV     P_SW2,#00H

            JMP     $

            END
```

C code

```
#include "reg51.h"
#include "intrins.h"
```

```
sfr     P_SW2       =   0xba;

#define I2CCFG          (*(unsigned char volatile xdata *)0xfe80)
#define I2CMSCR         (*(unsigned char volatile xdata *)0xfe81)
#define I2CMSST         (*(unsigned char volatile xdata *)0xfe82)
#define I2CSLCR         (*(unsigned char volatile xdata *)0xfe83)
#define I2CSLST         (*(unsigned char volatile xdata *)0xfe84)
#define I2CSLADR        (*(unsigned char volatile xdata *)0xfe85)
#define I2CTXD          (*(unsigned char volatile xdata *)0xfe86)
#define I2CRXD          (*(unsigned char volatile xdata *)0xfe87)

sbit    P10         =   P1^0;

void I2C_Isr() interrupt 24
{
    _push_(P_SW2);
    P_SW2 |= 0x80;
    if (I2CMSST & 0x40)
    {
        I2CMSST &= ~0x40;           //clear the symbol of interrupt
        P10 = !P10;                 //test the port
    }
    _pop_(P_SW2);
}

void main()
{
    P_SW2 = 0x80;
    I2CCFG = 0xc0;                  //enable I2C
    I2CMSCR = 0x80;                 //enableI2Cinterrupt;
    P_SW2 = 0x00;
    EA = 1;

    P_SW2 = 0x80;
    I2CMSCR = 0x81;
    P_SW2 = 0x00;

    while (1);
}
```

13 Timer/Counter

Five 16-bit Timer/Counters are integrated in STC8F family microcontrollers: T0, T1, T2, T3 and T4. All of them can be used as Timer or Counter. For T0 and T1, the "Timer" or "Counter" function is selected by the control bits C/T in the Special Function Register TMOD. For T2, the "Timer" or "Counter" function is selected by the control bit T2_C/T in the Special Function Register AUXR. For T3, the "Timer" or "Counter" function is selected by the control bit T3_C/T in the Special Function Register T4T3M. For T4, the "Timer" or "Counter" function is selected by the control bit T4_C/T in the Special Function Register T4T3M. The core of the timer / counter is an addition counter, the essence of which is counting pulses. The only difference of "Timer" mode and "Counter" mode is the different counting pulses sources. If the counting pulse is from the system clock, the timer/counter runs in the timing mode, it counts once every 12 clocks or one clock. If the counting pulse is from the microcontroller external reference pins (T0 is P3.4, T1 is P3.5, T2 is P1.2, T3 is P0.4, T4 is P0.6), the timer/counter runs in counting mode, it counts once every pulse.

When timer/counters T0, T1 and T2 are operating in "Timer" mode, T0x12, T1x12 and T2x12 in AUXR register are used to determine the clocks of T0, T1 and T2 are System Clock/12 or System Clock/1. When timer/ counters T3 and T4 are operating in "Timer" mode, T3x12 and T4x12 in the T4T3M Special Function Register determine the clocks of T3 and T4 are System Clock/12 or System Clock/1. When the timer/counters are operating in "Counter" mode, the frequency of the external pulse is not divided.

Timer/Counter 0 has four operating modes which are selected by bit-pairs (M1, M0) in TMOD. The four modes are mode 0 (16-bit auto-reload mode), mode 1 (16-bit non-auto-reload mode), mode 2 (8-bit auto-reload mode) and mode 3 (16-bit auto-reload mode whose interrupt can not be disabled). And for Timer/Counter 1, all modes except mode 3 are the same as Timer/Counter 0. The mode 3 of Timer/Counter 1 is invalid and stops counting. For T2, T3 and T4, they only have one mode: 16-bit auto-reload mode. Besides being used as Timer/Counters, T2, T3 and T4 also can be as the baud-rate generators of serial ports and programmable clock outputs.

13.1 Timer Related Registers

Symbol	Description	Address	Bit Address and Symbol								Value after reset
			B7	B6	B5	B4	B3	B2	B1	B0	
TCON	Timer 0 and 1 control register	88H	TF1	TR1	TF0	TR0	IE1	IT1	IE0	IT0	0000,0000
TMOD	Timer 0 and 1 mode	89H	GATE	C/T	M1	M0	GATE	C/T	M1	M0	0000,0000
TL0	Timer 0 low byte	8AH									0000,0000
TL1	Timer 1 low byte	8BH									0000,0000
TH0	Timer 0 high byte	8CH									0000,0000
TH1	Timer 1 high byte	8DH									0000,0000
AUXR	Auxiliary register 1	8EH	T0x12	T1x12	UART_M0x6	T2R	T2_C/T	T2x12	EXTRAM	S1ST2	0000,0001
INTCLKO	interrupt and clock output control	8FH	-	EX4	EX3	EX2	-	T2CLKO	T1CLKO	T0CLKO	x000,x000

	register										
WKTCL	Wake-up Timer Control register low	AAH									1111,1111
WKTCH	Wake-up Timer Control register high	ABH	WKTEN								0111,1111
T4T3M	Timer4 and Timer 3 mode register	D1H	T4R	T4_C/T	T4x12	T4CLKO	T3R	T3_C/T	T3x12	T3CLKO	0000,0000
T4H	Timer 4 high byte	D2H									0000,0000
T4L	Timer 4 low byte	D3H									0000,0000
T3H	Timer 3 high byte	D4H									0000,0000
T3L	Timer 3 low byte	D5H									0000,0000
T2H	Timer 2 high byte	D6H									0000,0000
T2L	Timer 2 low byte	D7H									0000,0000

13.2 Timer 0/1

Timer 0 and 1 control register

Symbol	Address	B7	B6	B5	B4	B3	B2	B1	B0
TCON	88H	TF1	TR1	TF0	TR0	IE1	IT1	IE0	IT0

TF1: Timer/Counter 1 Overflow Flag. After T1 is enabled to count, it performs adding 1 count from the initial value. TF1 is set by hardware on Timer/Counter 1 overflow and requests interrupt to CPU. It will keep the status until CPU responds the interrupt and is cleared by hardware automatically. It also can be cleared by software.

TR1: Timer/Counter 1 run control bit. It is set or cleared by software to turn Timer/Counter on/off. When GATE (TMOD.7) = 0, T1 will start counting as soon as TR1=1 and stop counting when TR1 = 0. If GATE (TMOD.7) = 1, T1 count is enabled only if TR1 = 1 and INT1 is high.

TF0: Timer/Counter 0 Overflow Flag. After T0 is enabled to count, it performs adding 1 count from the initial value. TF0 is set by hardware on Timer/Counter 1 overflow and requests interrupt to CPU. It will keep the status until CPU responds the interrupt and is cleared by hardware automatically. It also can be cleared by software.

TR0: Timer/Counter 0 run control bit. It is set or cleared by software to turn Timer/Counter on/off. When GATE (TMOD.3) = 0, T0 will start counting as soon as TR0=1 and stop counting when TR0 = 0. If GATE (TMOD.3) = 1, T0 count is enabled only if TR0 = 1 and INT0 is high.

IE1: External interrupt 1 (INT1/P3.3) request flag. It is set by hardware when external interrupt rising or falling edge defined by IT1 is detected. The flag can be cleared by software but is automatically cleared when the external interrupt 1 service routine has been processed.

IT1: External Intenupt 1 edge trigger type select bit. It is set/cleared by software to specify rising / falling edges triggered external interrupt 1. If IT1 = 0, INT1 is triggered by both rising and falling edges. If IT1 = 1, INT1 is triggered only by falling edge.

IE0: External interrupt 0 (INT0/P3.2) request flag. It is set by hardware when external interrupt rising or falling edge defined by IT0 is detected. The flag can be cleared by software but is automatically cleared when the external interrupt 0 service routine has been processed.

IT0: External Intenupt 0 edge trigger type select bit. If IT0 = 0, INT0 is triggered by both rising and falling edges. If IT0 = 1, INT0 is triggered only by falling edge.

Timer 0/1 mode register

Symbol	Address	B7	B6	B5	B4	B3	B2	B1	B0
TMOD	89H	T1_GATE	T1_C/T	T1_M1	T1_M0	T0_GATE	T0_C/T	T0_M1	T0_M0

T1_GATE: Timer/Counter 1 gate control. If GATE/TMOD.7 = 1, Timer/Counter 1 enabled only when TR1 is set AND INT1 pin is high.

T0_GATE: Timer/Counter 0 gate control. If GATE/TMOD.3 = 1, Timer/Counter 0 enabled only when TR0 is set AND INT0 pin is high.

T1_C/T: Timer/Counter 1 mode select bit.

If C/T / TMOD.6 = 0, Timer/Counter 1 is used as Timer (input pulse is from internal system clock);

If C/T / TMOD.6 = 1, Timer/Counter 1 is used as Counter (input pulse is from external T1/P3.5 pin).

T0_C/T: Timer/Counter 0 mode select bit.

If C/T / TMOD.2 = 0, Timer/Counter 0 is used as Timer (input pulse is from internal system clock);

If C/T / TMOD.2 = 1, Timer/Counter 0 is used as Counter (input pulse is from external T0/P3.4 pin).

T1_M1/T1_M0: Timer 1 mode select bits.

T1_M1	T1_M0	Timer/Counter 1 operating mode
0	0	16-bit auto-reload mode. When the 16-bit counter [TH1, TL1] overflows, the system automatically loads the reload value in the internal 16-bit reload register into [TH1, TL1].
0	1	16-bit non-auto-reload mode. When the 16-bit counter [TH1, TL1] overflows, timer 1 will count from 0.
1	0	8-bit auto-reload mode. When the 8-bit counter TL1 overflows, the system automatically loads the reload value in TH1 into TL1.
1	1	T1 is stoped.

T0_M1/T0_M0: Timer 0 mode select bits.

T0_M1	T0_M0	Timer/Counter 0 operating mode
0	0	16-bit auto-reload mode. When the 16-bit counter [TH0, TL0] overflows, the system automatically loads the reload value in the internal 16-bit reload register into [TH0, TL0].

0	1	16-bit non-auto-reload mode. When the 16-bit counter [TH1, TL1] overflows, timer 1 will count from 0.
1	0	8-bit auto-reload mode. When the 8-bit counter TL0 overflows, the system automatically loads the reload value in TH0 into TL0.
1	1	16-bit auto-reload mode. It is similar to mode 0, whose interrupt can not be disabled.

Timer 0 counting register

Symbol	Address	B7	B6	B5	B4	B3	B2	B1	B0
TL0	8AH								
TH0	8CH								

When Timer/Counter 0 is operating in 16-bit mode (Mode 0, Mode 1, Mode 3), TL0 and TH0 combine into a 16-bit register with TL0 as the low byte and TH0 as the high byte. For 8-bit mode (mode 2), TL0 and TH0 are two independent 8-bit registers.

Timer 1 counting register

Symbol	Address	B7	B6	B5	B4	B3	B2	B1	B0
TL1	8BH								
TH1	8DH								

When Timer/Counter 1 is operating in 16-bit mode (Mode 0, Mode 1, Mode 3), TL1 and TH1 combine into a 16-bit register with TL1 as the low byte and TH1 as the high byte. For 8-bit mode (mode 2), TL1 and TH1 are two independent 8-bit registers.

Auxiliary register 1(AUXR)

Symbol	Address	B7	B6	B5	B4	B3	B2	B1	B0
AUXR	8EH	T0x12	T1x12	UART_M0x6	T2R	T2_C/T	T2x12	EXTRAM	S1ST2

T0x12: Timer 0 speed control bit.

0: The clock source of Timer 0 is SYSclk/12.

1: The clock source of Timer 0 is SYSclk/1.

T1x12: Timer 1 speed control bit.

0: The clock source of Timer 1 is SYSclk/12.

1: The clock source of Timer 1 is SYSclk/1.

interrupt and clock out control register (INTCLKO)

Symbol	Address	B7	B6	B5	B4	B3	B2	B1	B0
INTCLKO	8FH	-	EX4	EX3	EX2	-	T2CLKO	T1CLKO	T0CLKO

T0CLKO: Timer 0 clock out control bit.

0: Turn off the clock output.

1: P3.5 is configured for Timer0 programmable clock output T0CLKO. When Timer 0 overflows, P3.5

will flip automatically.

T1CLKO: Timer 0 clock out control bit.

0: Turn off the clock output.

1: P3.4 is configured for Timer1 programmable clock output T1CLKO. When Timer 1 overflows, P3.4 will flip automatically.

13.3 Timer 2

Auxiliary register 1(AUXR)

Symbol	Address	B7	B6	B5	B4	B3	B2	B1	B0
AUXR	8EH	T0x12	T1x12	UART_M0x6	T2R	T2_C/T	T2x12	EXTRAM	S1ST2

TR2: Timer/Counter 2 run control bit.

0: Timer 2 stops counting.

1: Timer 2 start counting.

T2_C/T: Timer/Counter 2 mode select bit.

0: Timer/Counter 2 is used as Timer (input pulse is from internal system clock);

1: Timer/Counter 2 is used as Counter (input pulse is from external T2/P1.2 pin).

T2x12: Timer 2 speed control bit.

0: The clock source of Timer 2 is SYSclk/12.

1: The clock source of Timer 2 is SYSclk/1.

interrupt and clock out control register (INTCLKO)

Symbol	Address	B7	B6	B5	B4	B3	B2	B1	B0
INTCLKO	8FH	-	EX4	EX3	EX2	-	T2CLKO	T1CLKO	T0CLKO

T2CLKO: Timer 2 clock out control bit.

0: Turn off the clock output.

1: P1.3 is configured for Timer2 programmable clock output T2CLKO. When Timer 2 overflows, P1.3 will flip automatically.

Timer 2 counting register

Symbol	Address	B7	B6	B5	B4	B3	B2	B1	B0
T2L	D7H								
T2H	D6H								

Timer/Counter 2 operates in 16-bit auto-reload mode. T2L and T2H combine into a 16-bit register with T2L as the low byte and T2H as the high byte. When the 16-bit counter [T2H, T2L] overflows, the system automatically loads the reload value in the internal 16-bit reload register into [T2H, T2L].

13.4 Timer 3/4

Timer 4/3 control register (T4T3M)

Symbol	Address	B7	B6	B5	B4	B3	B2	B1	B0

T4T3M	D1H	T4R	T4_C/T	T4x12	T4CLKO	T3R	T3_C/T	T3x12	T3CLKO

TR4: Timer/Counter 4 run control bit.

0: Timer 4 stops counting.

1: Timer 4 start counting.

T4_C/T: Timer/Counter 4 mode select bit.

0: Timer/Counter 4 is used as Timer (input pulse is from internal system clock);

1: Timer/Counter 4 is used as Counter (input pulse is from external T4/P0.6 pin).

T4x12: Timer 4 speed control bit.

0: The clock source of Timer 4 is SYSclk/12.

1: The clock source of Timer 4 is SYSclk/1.

T4CLKO: Timer 4 clock out control bit.

0: Turn off the clock output.

1: P0.7 is configured for Timer4 programmable clock output T4CLKO. When Timer 4 overflows, P0.7 will flip automatically.

TR3: Timer/Counter 3 run control bit.

0: Timer 3 stops counting.

1: Timer 3 start counting.

T3_C/T: Timer/Counter 3 mode select bit.

0: Timer/Counter 3 is used as Timer (input pulse is from internal system clock);

1: Timer/Counter 3 is used as Counter (input pulse is from external T3/P0.4 pin).

T3x12: Timer 3 speed control bit.

0: The clock source of Timer 3 is SYSclk/12.

1: The clock source of Timer 3 is SYSclk/1.

T3CLKO: Timer 3 clock out control bit.

0: Turn off the clock output.

1: P0.5 is configured for Timer3 programmable clock output T3CLKO. When Timer 3 overflows, P0.5 will flip automatically.

Timer 3 counting register

Symbol	Address	B7	B6	B5	B4	B3	B2	B1	B0
T3L	D5H								
T3H	D4H								

Timer/Counter 3 operates in 16-bit auto-reload mode. T3L and T3H combine into a 16-bit register with T3L as the low byte and T3H as the high byte. When the 16-bit counter [T3H, T3L] overflows, the system automatically loads the reload value in the internal 16-bit reload register into [T3H, T3L].

Timer 4 counting register

Symbol	Address	B7	B6	B5	B4	B3	B2	B1	B0
T4L	D3H								
T4H	D2H								

Timer/Counter 4 operates in 16-bit auto-reload mode. T4L and T4H combine into a 16-bit register with T4L as

the low byte and T4H as the high byte. When the 16-bit counter [T4H, T4L] overflows, the system automatically loads the reload value in the internal 16-bit reload register into [T4H, T4L].

13.5 Power-Down Wake-Up Special Timer

The internal power-down wake-up special Timer consists of a 15-bit timer {WKTCH[6:0],WKTCL[7:0]}, which is used to wake MCU in power-down mode.

Power-down wake-up timer registers

Symbol	Address	B7	B6	B5	B4	B3	B2	B1	B0
WKTCL	AAH								
WKTCH	ABH	WKTEN							

WKTEN: internal power-down wake-up special Timer enable bit.

0: disable internal power-down wake-up special Timer.

1: enable internal power-down wake-up special Timer.

If the dedicated power-down wake-up timer integrated in STF8 family microcontollers is enabled (the WKTEN bit in the WKTCH register is set by software), the wake-up timer starts counting when the MCU enters Power-down mode or stop mode. When the count value is equal to the value set by the user, the dedicated power-down wake-up timer will wake up the MCU. After the MCU wake-up, it will execute the next statement where MCU entered the power-down mode. After the MCU wakes up from power-down mode, we can read the contents of WKTCH and WKTCL to get the MCU sleep in power-down mode.

Please note here that the value written by user in registers {WKTCH [6: 0], WKTCL [7: 0]} must be one less than the actual count value. For example, if user needs to count 10 times, then 9 is written into the registers {WKTCH [6: 0], WKTCL [7: 0]}. Similarly, if user wants to count 32768 times, 7FFFH (ie 32767) should be written into {WKTCH [6: 0], WKTCL [7: 0]}.

Internal power-down wake-up timer has its own internal clock, where the wake-up timer's count time is determined by the clock. The clock frequency of internal power-down wake-up timer is about 32KHz, of course, the error may be large. The user can read the contents of F8H and F9H in the RAM area (F8H high byte and F9H low byte) to get the clock frequency of the internal power-down wake-up timer marked by the factory.

The counting time of the dedicated power-down wake-up timer is calculated as follows: (F_{wt} is the clock frequency of the internal wake-up timer we got from F8H and F9H of the RAM area.)

$$\text{counting time of the power-down wake-up timer} = \frac{10^6}{F_{wt}} \times 16 \times \text{counting timers} \quad (\text{us})$$

Assume F_{wt}=32KHz, we have,

{WKTCH[6:0],WKTCL[7:0]}	counting time of the dedicated power-down wake-up timer
0	$10^6 \div 32K \times 16 \times (1+0) \approx 0.5ms$
9	$10^6 \div 32K \times 16 \times (1+9) \approx 5$ ms

99	$10^6 \div 32K \times 16 \times (1+99) \approx 50$ ms
999	$10^6 \div 32K \times 16 \times (1+999) \approx 0.5$s
4095	$10^6 \div 32K \times 16 \times (1+4095) \approx 2$s
32767	$10^6 \div 32K \times 16 \times (1+32767) \approx 16$s

13.6 Demo code

13.6.1 Timer 0(Automatic reloading of mode 0－16 bit)

Assembly code

```
The operating frequency is 11.0592 MHz
        ORG     0000H
        LJMP    MAIN
        ORG     000BH
        LJMP    TM0ISR

        ORG     0100H
TM0ISR:
        CPL     P1.0            ;port of the test
        RETI

MAIN:
        MOV     SP,#3FH

        MOV     TMOD,#00H       ;mode 0
        MOV     TL0,#66H        ;65536-11.0592M/12/1000
        MOV     TH0,#0FCH
        SETB    TR0             ;start the timer
        SETB    ET0             ;enable the interrupt of timer
        SETB    EA

        JMP     $

        END
```

C code

```
#include "reg51.h"
#include "intrins.h"

The operating frequency is 11.0592 MHz

sbit    P10     =   P1^0;

void TM0_Isr() interrupt 1
{
    P10 = !P10;             //port of the test
}

void main()
{
    TMOD = 0x00;            //mode 0
    TL0 = 0x66;             //65536-11.0592M/12/1000
    TH0 = 0xfc;
```

```
    TR0 = 1;                    //start the timer
    ET0 = 1;                    //enable the interrupt of timer
    EA = 1;

    while (1);
}
```

13.6.2 Timer 0(Non automatic reloading of mode 1－16 bit)

Assembly code

```
The operating frequency is 11.0592 MHz
            ORG     0000H
            LJMP    MAIN
            ORG     000BH
            LJMP    TM0ISR

            ORG     0100H
TM0ISR:
            MOV     TL0,#66H            ;reset the parameters of timer
            MOV     TH0,#0FCH
            CPL     P1.0                ;port of the test
            RETI

MAIN:
            MOV     SP,#3FH

            MOV     TMOD,#01H           ;mode1
            MOV     TL0,#66H            ;65536-11.0592M/12/1000
            MOV     TH0,#0FCH
            SETB    TR0                 ;start the timer
            SETB    ET0                 ;enable the interrupt of timer
            SETB    EA

            JMP     $

            END
```

C code

```
#include "reg51.h"
#include "intrins.h"

//The operating frequency is 11.0592 MHz

sbit    P10     =   P1^0;

void TM0_Isr() interrupt 1
{
    TL0 = 0x66;                 //reset the parameters of timer
    TH0 = 0xfc;
    P10 = !P10;                 //port of the test
}

void main()
{
    TMOD = 0x01;                //mode 1
```

```
    TL0 = 0x66;                     //65536-11.0592M/12/1000
    TH0 = 0xfc;
    TR0 = 1;                        //start the timer
    ET0 = 1;                        //enable the interrupt of timer
    EA = 1;

    while (1);
}
```

13.6.3 Timer 0(Automatic reloading of mode 2－8 bit)

Assembly code

```
The operating frequency is 11.0592 MHz
            ORG     0000H
            LJMP    MAIN
            ORG     000BH
            LJMP    TM0ISR

            ORG     0100H
TM0ISR:
            CPL     P1.0                ;port of the test
            RETI

MAIN:
            MOV     SP,#3FH

            MOV     TMOD,#02H           ;mode2
            MOV     TL0,#0F4H           ;256-11.0592M/12/76K
            MOV     TH0,#0F4H
            SETB    TR0                 ;start the timer
            SETB    ET0                 ;enable the interrupt of timer
            SETB    EA

            JMP     $

            END
```

C code

```
#include "reg51.h"
#include "intrins.h"

//The operating frequency is 11.0592 MHz

sbit    P10     =   P1^0;

void TM0_Isr() interrupt 1
{
    P10 = !P10;                     //port of the test
}

void main()
{
    TMOD = 0x02;                    //mode2
    TL0 = 0xf4;                     //256-11.0592M/12/76K
    TH0 = 0xf4;
```

```
    TR0 = 1;                    //start the timer
    ET0 = 1;                    //enable the interrupt of timer
    EA = 1;

    while (1);
}
```

13.6.4 Timer 0(Automatic reloading of non-maskable interrupt for mode 2－8 bit)

Assembly code

```
The operating frequency is 11.0592 MHz
            ORG     0000H
            LJMP    MAIN
            ORG     000BH
            LJMP    TM0ISR

            ORG     0100H
TM0ISR:
            CPL     P1.0                ;port of the test
            RETI

MAIN:
            MOV     SP,#3FH

            MOV     TMOD,#03H           ;mode3
            MOV     TL0,#66H            ;65536-11.0592M/12/1000
            MOV     TH0,#0FCH
            SETB    TR0                 ;start the timer
            SETB    ET0                 ;enable the interrupt of timer
;           SETB    EA

            JMP     $

            END
```

C code

```
#include "reg51.h"
#include "intrins.h"

//The operating frequency is 11.0592 MHz

sbit    P10     =   P1^0;

void TM0_Isr() interrupt 1
{
    P10 = !P10;                     //port of the test
}

void main()
{
    TMOD = 0x03;                    //mode3
    TL0 = 0x66;                     //65536-11.0592M/12/1000
```

```
    TH0 = 0xfc;
    TR0 = 1;                    //start the timer
    ET0 = 1;                    //enable the interrupt of timer
//  EA = 1;

    while (1);
}
```

13.6.5 Timer 0(External counting－set T0 as external interrupt of falling edge)

Assembly code

```
The operating frequency is 11.0592 MHz
            ORG     0000H
            LJMP    MAIN
            ORG     000BH
            LJMP    TM0ISR

            ORG     0100H
TM0ISR:
            CPL     P1.0            ;port of the test
            RETI

MAIN:
            MOV     SP,#3FH

            MOV     TMOD,#04H       ;External counting mode
            MOV     TL0,#0FFH
            MOV     TH0,#0FFH
            SETB    TR0             ;start the timer
            SETB    ET0             ;enable the interrupt of timer
            SETB    EA

            JMP     $

            END
```

C code

```
#include "reg51.h"
#include "intrins.h"

//The operating frequency is 11.0592 MHz

sbit    P10     =   P1^0;

void TM0_Isr() interrupt 1
{
    P10 = !P10;                 //port of the test
}

void main()
{
    TMOD = 0x04;                //External countingmode
```

```
    TL0 = 0xff;
    TH0 = 0xff;
    TR0 = 1;                    //start the timer
    ET0 = 1;                    //enable the interrupt of timer
    EA = 1;

    while (1);
}
```

13.6.6 Timer 0(Test pulse width—the width of high level for INT0)

Assembly code

```
The operating frequency is 11.0592 MHz
AUXR        DATA    8EH

            ORG     0000H
            LJMP    MAIN
            ORG     0003H
            LJMP    INT0ISR

            ORG     0100H
INT0ISR:
            MOV     P0,TL0
            MOV     P1,TH0
            RETI

MAIN:
            MOV     SP,#3FH

            MOV     AUXR,#80H           ;1T mode
            MOV     TMOD,#08H
            MOV     TL0,#00H
            MOV     TH0,#00H
            JB      INT0,$
            SETB    TR0                 ;start the timer
            SETB    IT0
            SETB    EX0
            SETB    EA

            JMP     $

            END
```

C code

```
#include "reg51.h"
#include "intrins.h"

//The operating frequency is 11.0592 MHz

sfr     AUXR    =   0x8e;

void INT0_Isr() interrupt 0
```

```
{
    P0 = TL0;
    P1 = TH0;
}

void main()
{
    AUXR = 0x80;                    //1T mode
    TMOD = 0x08;
    TL0 = 0x00;
    TH0 = 0x00;
    while (INT0);
    TR0 = 1;                        //start the timer
    IT0 = 1;
    EX0 = 1;
    EA = 1;

    while (1);
}
```

13.6.7 Timer 0(Clock divider output)

Assembly code

```
The operating frequency is 11.0592 MHz
INTCLKO     DATA    8FH

            ORG     0000H
            LJMP    MAIN

            ORG     0100H
MAIN:
            MOV     SP,#3FH

            MOV     TMOD,#00H           ;mode 0
            MOV     TL0,#66H            ;65536-11.0592M/12/1000
            MOV     TH0,#0FCH
            SETB    TR0                 ;start the timer
            MOV     INTCLKO,#01H        ;enable the output of timer

            JMP     $

            END
```

C code

```
#include "reg51.h"
#include "intrins.h"

//The operating frequency is 11.0592 MHz

sfr     INTCLKO     =   0x8f;

void main()
{
    TMOD = 0x00;                    //mode 0
    TL0 = 0x66;                     //65536-11.0592M/12/1000
```

```
    TH0 = 0xfc;
    TR0 = 1;                    //start the timer
    INTCLKO = 0x01;             //enable the output of timer

    while (1);
}
```

13.6.8 Timer 1(Automatic reloading of mode 0－16 bit)

Assembly code

```
The operating frequency is 11.0592 MHz
            ORG     0000H
            LJMP    MAIN
            ORG     001BH
            LJMP    TM1ISR

            ORG     0100H
TM1ISR:
            CPL     P1.0            ;port of the test
            RETI

MAIN:
            MOV     SP,#3FH

            MOV     TMOD,#00H       ;mode 0
            MOV     TL1,#66H        ;65536-11.0592M/12/1000
            MOV     TH1,#0FCH
            SETB    TR1             ;start the timer
            SETB    ET1             ;enable the interrupt of timer
            SETB    EA

            JMP     $

            END
```

C code

```
#include "reg51.h"
#include "intrins.h"

//The operating frequency is 11.0592 MHz

sbit    P10     =   P1^0;

void TM1_Isr() interrupt 3
{
    P10 = !P10;                 //port of the test
}

void main()
{
    TMOD = 0x00;                //mode 0
    TL1 = 0x66;                 //65536-11.0592M/12/1000
    TH1 = 0xfc;
    TR1 = 1;                    //start the timer
    ET1 = 1;                    //enable the interrupt of timer
```

```
    EA = 1;

    while (1);
}
```

13.6.9 Timer 1(Non automatic reloading of mode 1—16 bit)

Assembly code

```
The operating frequency is 11.0592 MHz
            ORG     0000H
            LJMP    MAIN
            ORG     001BH
            LJMP    TM1ISR

            ORG     0100H
TM1ISR:
            MOV     TL1,#66H            ;reset the parameters of timer
            MOV     TH1,#0FCH
            CPL     P1.0                ;port of the test
            RETI

MAIN:
            MOV     SP,#3FH

            MOV     TMOD,#10H           ;mode1
            MOV     TL1,#66H            ;65536-11.0592M/12/1000
            MOV     TH1,#0FCH
            SETB    TR1                 ;start the timer
            SETB    ET1                 ;enable the interrupt of timer
            SETB    EA

            JMP     $

            END
```

C code

```
#include "reg51.h"
#include "intrins.h"

//The operating frequency is 11.0592 MHz

sbit    P10     =   P1^0;

void TM1_Isr() interrupt 3
{
    TL1 = 0x66;             //reset the parameters of timer
    TH1 = 0xfc;
    P10 = !P10;             //port of the test
}

void main()
{
```

```
    TMOD = 0x10;                    //mode1
    TL1 = 0x66;                     //65536-11.0592M/12/1000
    TH1 = 0xfc;
    TR1 = 1;                        //start the timer
    ET1 = 1;                        //enable the interrupt of timer
    EA = 1;

    while (1);
}
```

13.6.10 Timer 1(Automatic reloading of mode 2－8 bit)

Assembly code

```
The operating frequency is 11.0592 MHz
            ORG     0000H
            LJMP    MAIN
            ORG     001BH
            LJMP    TM1ISR

            ORG     0100H
TM1ISR:
            CPL     P1.0                ;port of the test
            RETI

MAIN:
            MOV     SP,#3FH

            MOV     TMOD,#20H           ;mode2
            MOV     TL1,#0F4H           ;256-11.0592M/12/76K
            MOV     TH1,#0F4H
            SETB    TR1                 ;start the timer
            SETB    ET1                 ;enable the interrupt of timer
            SETB    EA

            JMP     $

            END
```

C code

```
#include "reg51.h"
#include "intrins.h"

//The operating frequency is 11.0592 MHz

sbit    P10     =   P1^0;

void TM1_Isr() interrupt 3
{
    P10 = !P10;                     //port of the test
}

void main()
{
    TMOD = 0x20;                    //mode2
    TL1 = 0xf4;                     //256-11.0592M/12/76K
```

```
    TH1 = 0xf4;
    TR1 = 1;                    //start the timer
    ET1 = 1;                    //enable the interrupt of timer
    EA = 1;

    while (1);
}
```

13.6.11 Timer 1(External counting—set T1 as external interrupt of falling edge)

Assembly code

```
The operating frequency is 11.0592 MHz
            ORG     0000H
            LJMP    MAIN
            ORG     001BH
            LJMP    TM1ISR

            ORG     0100H
TM1ISR:
            CPL     P1.0            ;port of the test
            RETI

MAIN:
            MOV     SP,#3FH

            MOV     TMOD,#40H       ;External counting mode
            MOV     TL1,#0FFH
            MOV     TH1,#0FFH
            SETB    TR1             ;start the timer
            SETB    ET1             ;enable the interrupt of timer
            SETB    EA

            JMP     $

            END
```

C code

```
#include "reg51.h"
#include "intrins.h"

//The operating frequency is 11.0592 MHz

sbit    P10     =   P1^0;

void TM1_Isr() interrupt 3
{
    P10 = !P10;                 //port of the test
}

void main()
{
    TMOD = 0x40;                //External counting mode
```

```
    TL1 = 0xff;
    TH1 = 0xff;
    TR1 = 1;                    //start the timer
    ET1 = 1;                    //enable the interrupt of timer
    EA = 1;

    while (1);
}
```

13.6.12 Timer 1(Test pulse width－the width of high level for INT1)

Assembly code

```
The operating frequency is 11.0592 MHz
AUXR        DATA    8EH

            ORG     0000H
            LJMP    MAIN
            ORG     0013H
            LJMP    INT1ISR

            ORG     0100H
INT1ISR:
            MOV     P0,TL1
            MOV     P1,TH1
            RETI

MAIN:
            MOV     SP,#3FH

            MOV     AUXR,#40H           ;1Tmode
            MOV     TMOD,#80H
            MOV     TL1,#00H
            MOV     TH1,#00H
            JB      INT1,$
            SETB    TR1                 ;start the timer
            SETB    IT1
            SETB    EX1
            SETB    EA

            JMP     $

            END
```

C code

```
#include "reg51.h"
#include "intrins.h"

//The operating frequency is 11.0592 MHz

sfr     AUXR    =   0x8e;

void INT1_Isr() interrupt 2
```

```
{
    P0 = TL1;
    P1 = TH1;
}

void main()
{
    AUXR = 0x40;                    //1Tmode
    TMOD = 0x80;
    TL1 = 0x00;
    TH1 = 0x00;
    while (INT1);
    TR1 = 1;                        //start the time
    IT1 = 1;
    EX1 = 1;
    EA = 1;

    while (1);
}
```

13.6.13 Timer 1(clock divider output)

Assembly code

```
The operating frequency is 11.0592 MHz
INTCLKO     DATA    8FH

            ORG     0000H
            LJMP    MAIN

            ORG     0100H
MAIN:
            MOV     SP,#3FH

            MOV     TMOD,#00H           ;mode 0
            MOV     TL1,#66H            ;65536-11.0592M/12/1000
            MOV     TH1,#0FCH
            SETB    TR1                 ;start the timer
            MOV     INTCLKO,#02H        ;enable the output of timer

            JMP     $

            END
```

C code

```
#include "reg51.h"
#include "intrins.h"

//The operating frequency is 11.0592 MHz

sfr     INTCLKO     =   0x8f;

void main()
{
    TMOD = 0x00;                    //mode 0
    TL1 = 0x66;                     //65536-11.0592M/12/1000
```

```
    TH1 = 0xfc;
    TR1 = 1;                    //start the timer
    INTCLKO = 0x02;             //enable the output of timer

    while (1);
}
```

13.6.14 Configure Timer 1(mode 0)as Baud Rate Generate of serial port 1

Assembly code

```
AUXR        DATA    8EH

BUSY        BIT     20H.0
WPTR        DATA    21H
RPTR        DATA    22H
BUFFER      DATA    23H                 ;16 bytes

            ORG     0000H
            LJMP    MAIN
            ORG     0023H
            LJMP    UART_ISR

            ORG     0100H

UART_ISR:
            PUSH    ACC
            PUSH    PSW
            MOV     PSW,#08H

            JNB     TI,CHKRI
            CLR     TI
            CLR     BUSY
CHKRI:
            JNB     RI,UARTISR_EXIT
            CLR     RI
            MOV     A,WPTR
            ANL     A,#0FH
            ADD     A,#BUFFER
            MOV     R0,A
            MOV     @R0,SBUF
            INC     WPTR
UARTISR_EXIT:
            POP     PSW
            POP     ACC
            RETI

UART_INIT:
            MOV     SCON,#50H
            MOV     TMOD,#00H
            MOV     TL1,#0E8H           ;65536-11059200/115200/4=0FFE8H
            MOV     TH1,#0FFH
            SETB    TR1
            MOV     AUXR,#40H
```

```
                CLR     BUSY
                MOV     WPTR,#00H
                MOV     RPTR,#00H
                RET

UART_SEND:
                JB      BUSY,$
                SETB    BUSY
                MOV     SBUF,A
                RET

UART_SENDSTR:
                CLR     A
                MOVC    A,@A+DPTR
                JZ      SENDEND
                LCALL   UART_SEND
                INC     DPTR
                JMP     UART_SENDSTR
SENDEND:
                RET

MAIN:
                MOV     SP,#3FH

                LCALL   UART_INIT
                SETB    ES
                SETB    EA

                MOV     DPTR,#STRING
                LCALL   UART_SENDSTR

LOOP:
                MOV     A,RPTR
                XRL     A,WPTR
                ANL     A,#0FH
                JZ      LOOP
                MOV     A,RPTR
                ANL     A,#0FH
                ADD     A,#BUFFER
                MOV     R0,A
                MOV     A,@R0
                LCALL   UART_SEND
                INC     RPTR
                JMP     LOOP

STRING:         DB      'Uart Test !',0DH,0AH,00H

                END
```

C code

```
#include "reg51.h"
#include "intrins.h"

#define     FOSC        11059200UL
#define     BRT         (65536 - FOSC / 115200 / 4)

sfr         AUXR    =   0x8e;
```

```
bit         busy;
char        wptr;
char        rptr;
char        buffer[16];

void UartIsr() interrupt 4
{
        if (TI)
        {
                TI = 0;
                busy = 0;
        }
        if (RI)
        {
                RI = 0;
                buffer[wptr++] = SBUF;
                wptr &= 0x0f;
        }
}

void UartInit()
{
        SCON = 0x50;
        TMOD = 0x00;
        TL1 = BRT;
        TH1 = BRT >> 8;
        TR1 = 1;
        AUXR = 0x40;
        wptr = 0x00;
        rptr = 0x00;
        busy = 0;
}

void UARTsend(char dat)
{
        while (busy);
        busy = 1;
        SBUF = dat;
}

void UARTsendStr(char *p)
{
        while (*p)
        {
                UARTsend(*p++);
        }
}

void main()
{
        UartInit();
        ES = 1;
        EA = 1;
        UARTsendStr("Uart Test !\r\n");

        while (1)
        {
```

STC MCU

```
        if (rptr != wptr)
        {
            UARTsend(buffer[rptr++]);
            rptr &= 0x0f;
        }
    }
}
```

13.6.15 Configure Timer 1(mode 2) as Baud Rate Generate of serial port 1

Assembly code

```
AUXR        DATA    8EH

BUSY        BIT     20H.0
WPTR        DATA    21H
RPTR        DATA    22H
BUFFER      DATA    23H                 ;16 bytes

            ORG     0000H
            LJMP    MAIN
            ORG     0023H
            LJMP    UART_ISR

            ORG     0100H

UART_ISR:
            PUSH    ACC
            PUSH    PSW
            MOV     PSW,#08H

            JNB     TI,CHKRI
            CLR     TI
            CLR     BUSY
CHKRI:
            JNB     RI,UARTISR_EXIT
            CLR     RI
            MOV     A,WPTR
            ANL     A,#0FH
            ADD     A,#BUFFER
            MOV     R0,A
            MOV     @R0,SBUF
            INC     WPTR
UARTISR_EXIT:
            POP     PSW
            POP     ACC
            RETI

UART_INIT:
            MOV     SCON,#50H
            MOV     TMOD,#20H
            MOV     TL1,#0FDH           ;256-11059200/115200/32=0FDH
```

```
                MOV     TH1,#0FDH
                SETB    TR1
                MOV     AUXR,#40H
                CLR     BUSY
                MOV     WPTR,#00H
                MOV     RPTR,#00H
                RET

UART_SEND:
                JB      BUSY,$
                SETB    BUSY
                MOV     SBUF,A
                RET

UART_SENDSTR:
                CLR     A
                MOVC    A,@A+DPTR
                JZ      SENDEND
                LCALL   UART_SEND
                INC     DPTR
                JMP     UART_SENDSTR
SENDEND:
                RET

MAIN:
                MOV     SP,#3FH

                LCALL   UART_INIT
                SETB    ES
                SETB    EA

                MOV     DPTR,#STRING
                LCALL   UART_SENDSTR

LOOP:
                MOV     A,RPTR
                XRL     A,WPTR
                ANL     A,#0FH
                JZ      LOOP
                MOV     A,RPTR
                ANL     A,#0FH
                ADD     A,#BUFFER
                MOV     R0,A
                MOV     A,@R0
                LCALL   UART_SEND
                INC     RPTR
                JMP     LOOP

STRING:         DB      'Uart Test !',0DH,0AH,00H

                END
```

C code

```
#include "reg51.h"
#include "intrins.h"

#define     FOSC            11059200UL
```

```
#define     BRT             (256 - FOSC / 115200 / 32)

sfr         AUXR        =   0x8e;

bit         busy;
char        wptr;
char        rptr;
char        buffer[16];

void UartIsr() interrupt 4
{
    if (TI)
    {
        TI = 0;
        busy = 0;
    }
    if (RI)
    {
        RI = 0;
        buffer[wptr++] = SBUF;
        wptr &= 0x0f;
    }
}

void UartInit()
{
    SCON = 0x50;
    TMOD = 0x20;
    TL1 = BRT;
    TH1 = BRT;
    TR1 = 1;
    AUXR = 0x40;
    wptr = 0x00;
    rptr = 0x00;
    busy = 0;
}

void UARTsend(char dat)
{
    while (busy);
    busy = 1;
    SBUF = dat;
}

void UARTsendStr(char *p)
{
    while (*p)
    {
        UARTsend(*p++);
    }
}

void main()
{
    UartInit();
    ES = 1;
    EA = 1;
    UARTsendStr("Uart Test !\r\n");
```

STC MCU

```
    while (1)
    {
        if (rptr != wptr)
        {
            UARTsend(buffer[rptr++]);
            rptr &= 0x0f;
        }
    }
}
```

13.6.16 Timer 2 (Automatic reloading for 16 bits)

Assembly code

```
The operating frequency is 11.0592 MHz
T2L         DATA    0D7H
T2H         DATA    0D6H
AUXR        DATA    8EH
IE2         DATA    0AFH
ET2         EQU     04H
AUXINTIF    DATA    0EFH
T2IF        EQU     01H

            ORG     0000H
            LJMP    MAIN
            ORG     0063H
            LJMP    TM2ISR

            ORG     0100H
TM2ISR:
            CPL     P1.0            ;port of the test
            ANL     AUXINTIF,#NOT T2IF  ;clear the symbol of interrupt
            RETI

MAIN:
            MOV     SP,#3FH

            MOV     T2L,#66H        ;65536-11.0592M/12/1000
            MOV     T2H,#0FCH
            MOV     AUXR,#10H       ;start the timer
            MOV     IE2,#ET2        ;enable the interrupt of timer
            SETB    EA

            JMP     $

            END
```

C code

```
#include "reg51.h"
#include "intrins.h"

//The operating frequency is 11.0592 MHz

sfr     T2L     =   0xd7;
sfr     T2H     =   0xd6;
```

```
sfr     AUXR        =   0x8e;
sfr     IE2         =   0xaf;
#define ET2             0x04
sfr     AUXINTIF    =   0xef;
#define T2IF            0x01

sbit    P10         =   P1^0;

void TM2_Isr() interrupt 12
{
    P10 = !P10;                     //port of the test
    AUXINTIF &= ~T2IF;              //clear the symbol of interrupt
}

void main()
{
    T2L = 0x66;                     //65536-11.0592M/12/1000
    T2H = 0xfc;
    AUXR = 0x10;                    //start the timer
    IE2 = ET2;                      //enable the interrupt of timer
    EA = 1;

    while (1);
}
```

13.6.17 Timer 2 (External counting—set T2 as external interrupt of falling edge)

Assembly code

```
The operating frequency is 11.0592 MHz
T2L         DATA    0D7H
T2H         DATA    0D6H
AUXR        DATA    8EH
IE2         DATA    0AFH
ET2         EQU     04H
AUXINTIF    DATA    0EFH
T2IF        EQU     01H

            ORG     0000H
            LJMP    MAIN
            ORG     0063H
            LJMP    TM2ISR

            ORG     0100H
TM2ISR:
            CPL     P1.0                ;port of the test
            ANL     AUXINTIF,#NOT T2IF  ;clear the symbol of interrupt
            RETI

MAIN:
            MOV     SP,#3FH

            MOV     T2L,#0FFH
            MOV     T2H,#0FFH
```

```
        MOV     AUXR,#18H       ;set External countingmode and start the timer
        MOV     IE2,#ET2        ;enable the interrupt of timer
        SETB    EA

        JMP     $

        END
```

C code

```
#include "reg51.h"
#include "intrins.h"

//The operating frequency is 11.0592 MHz

sfr     T2L         =   0xd7;
sfr     T2H         =   0xd6;
sfr     AUXR        =   0x8e;
sfr     IE2         =   0xaf;
#define ET2             0x04
sfr     AUXINTIF    =   0xef;
#define T2IF            0x01

sbit    P10         =   P1^0;

void TM2_Isr() interrupt 12
{
    P10 = !P10;                 //port of the test
    AUXINTIF &= ~T2IF;          //clear the symbol of interrupt
}

void main()
{
    T2L = 0xff;
    T2H = 0xff;
    AUXR = 0x18;                //set External countingmode and start the timer
    IE2 = ET2;                  //enable the interrupt of timer
    EA = 1;

    while (1);
}
```

13.6.18 Timer 2(clock divider output)

Assembly code

```
The operating frequency is 11.0592 MHz
T2L         DATA    0D7H
T2H         DATA    0D6H
AUXR        DATA    8EH
INTCLKO     DATA    8FH

            ORG     0000H
            LJMP    MAIN

            ORG     0100H
MAIN:
```

```
        MOV     SP,#3FH

        MOV     T2L,#66H            ;65536-11.0592M/12/1000
        MOV     T2H,#0FCH
        MOV     AUXR,#10H           ;start the timer
        MOV     INTCLKO,#04H        ;enable the output of timer

        JMP     $

        END
```

C code

```
#include "reg51.h"
#include "intrins.h"

//The operating frequency is 11.0592 MHz

sfr     T2L     =   0xd7;
sfr     T2H     =   0xd6;
sfr     AUXR    =   0x8e;
sfr     INTCLKO =   0x8f;

void main()
{
    T2L = 0x66;             //65536-11.0592M/12/1000
    T2H = 0xfc;
    AUXR = 0x10;            //start the timer
    INTCLKO = 0x04;         //enable the output of timer

    while (1);
}
```

13.6.19 Configure Timer 2 as Baud Rate Generate of serial port 1

Assembly code

```
AUXR    DATA    8EH
T2H     DATA    0D6H
T2L     DATA    0D7H

BUSY    BIT     20H.0
WPTR    DATA    21H
RPTR    DATA    22H
BUFFER  DATA    23H             ;16 bytes

        ORG     0000H
        LJMP    MAIN
        ORG     0023H
        LJMP    UART_ISR

        ORG     0100H

UART_ISR:
```

```
            PUSH    ACC
            PUSH    PSW
            MOV     PSW,#08H

            JNB     TI,CHKRI
            CLR     TI
            CLR     BUSY
CHKRI:
            JNB     RI,UARTISR_EXIT
            CLR     RI
            MOV     A,WPTR
            ANL     A,#0FH
            ADD     A,#BUFFER
            MOV     R0,A
            MOV     @R0,SBUF
            INC     WPTR
UARTISR_EXIT:
            POP     PSW
            POP     ACC
            RETI

UART_INIT:
            MOV     SCON,#50H
            MOV     T2L,#0E8H           ;65536-11059200/115200/4=0FFE8H
            MOV     T2H,#0FFH
            MOV     AUXR,#15H
            CLR     BUSY
            MOV     WPTR,#00H
            MOV     RPTR,#00H
            RET

UART_SEND:
            JB      BUSY,$
            SETB    BUSY
            MOV     SBUF,A
            RET

UART_SENDSTR:
            CLR     A
            MOVC    A,@A+DPTR
            JZ      SENDEND
            LCALL   UART_SEND
            INC     DPTR
            JMP     UART_SENDSTR
SENDEND:
            RET

MAIN:
            MOV     SP,#3FH

            LCALL   UART_INIT
            SETB    ES
            SETB    EA

            MOV     DPTR,#STRING
            LCALL   UART_SENDSTR

LOOP:
```

```
            MOV     A,RPTR
            XRL     A,WPTR
            ANL     A,#0FH
            JZ      LOOP
            MOV     A,RPTR
            ANL     A,#0FH
            ADD     A,#BUFFER
            MOV     R0,A
            MOV     A,@R0
            LCALL   UART_SEND
            INC     RPTR
            JMP     LOOP

STRING:     DB      'Uart Test !',0DH,0AH,00H

            END
```

C code

```
#include "reg51.h"
#include "intrins.h"

#define     FOSC            11059200UL
#define     BRT             (65536 - FOSC / 115200 / 4)

sfr         AUXR        =   0x8e;
sfr         T2H         =   0xd6;
sfr         T2L         =   0xd7;

bit         busy;
char        wptr;
char        rptr;
char        buffer[16];

void UartIsr() interrupt 4
{
    if (TI)
    {
        TI = 0;
        busy = 0;
    }
    if (RI)
    {
        RI = 0;
        buffer[wptr++] = SBUF;
        wptr &= 0x0f;
    }
}

void UartInit()
{
    SCON = 0x50;
    T2L = BRT;
    T2H = BRT >> 8;
    AUXR = 0x15;
    wptr = 0x00;
    rptr = 0x00;
    busy = 0;
```

```
}

void UARTsend(char dat)
{
        while (busy);
        busy = 1;
        SBUF = dat;
}

void UARTsendStr(char *p)
{
        while (*p)
        {
                UARTsend(*p++);
        }
}

void main()
{
        UartInit();
        ES = 1;
        EA = 1;
        UARTsendStr("Uart Test !\r\n");

        while (1)
        {
                if (rptr != wptr)
                {
                        UARTsend(buffer[rptr++]);
                        rptr &= 0x0f;
                }
        }
}
```

13.6.20 Configure Timer 2 as Baud Rate Generate of serial port 2

Assembly code

```
AUXR        DATA    8EH
T2H         DATA    0D6H
T2L         DATA    0D7H
S2CON       DATA    9AH
S2BUF       DATA    9BH
IE2         DATA    0AFH

BUSY        BIT     20H.0
WPTR        DATA    21H
RPTR        DATA    22H
BUFFER      DATA    23H                     ;16 bytes

            ORG     0000H
            LJMP    MAIN
            ORG     0043H
            LJMP    UART2_ISR
```

```
                ORG     0100H

UART2_ISR:
                PUSH    ACC
                PUSH    PSW
                MOV     PSW,#08H

                MOV     A,S2CON
                JNB     ACC.1,CHKRI
                ANL     S2CON,#NOT 02H
                CLR     BUSY
CHKRI:
                JNB     ACC.0,UART2ISR_EXIT
                ANL     S2CON,#NOT 01H
                MOV     A,WPTR
                ANL     A,#0FH
                ADD     A,#BUFFER
                MOV     R0,A
                MOV     @R0,S2BUF
                INC     WPTR
UART2ISR_EXIT:
                POP     PSW
                POP     ACC
                RETI

UART2_INIT:
                MOV     S2CON,#50H
                MOV     T2L,#0E8H       ;65536-11059200/115200/4=0FFE8H
                MOV     T2H,#0FFH
                MOV     AUXR,#14H
                CLR     BUSY
                MOV     WPTR,#00H
                MOV     RPTR,#00H
                RET

UART2_SEND:
                JB      BUSY,$
                SETB    BUSY
                MOV     S2BUF,A
                RET

UART2_SENDSTR:
                CLR     A
                MOVC    A,@A+DPTR
                JZ      SEND2END
                LCALL   UART2_SEND
                INC     DPTR
                JMP     UART2_SENDSTR
SEND2END:
                RET

MAIN:
                MOV     SP,#3FH

                LCALL   UART2_INIT
                MOV     IE2,#01H
                SETB    EA
```

```
                MOV     DPTR,#STRING
                LCALL   UART2_SENDSTR

LOOP:
                MOV     A,RPTR
                XRL     A,WPTR
                ANL     A,#0FH
                JZ      LOOP
                MOV     A,RPTR
                ANL     A,#0FH
                ADD     A,#BUFFER
                MOV     R0,A
                MOV     A,@R0
                LCALL   UART2_SEND
                INC     RPTR
                JMP     LOOP

STRING:         DB      'Uart Test !',0DH,0AH,00H

                END
```

C code

```
#include "reg51.h"
#include "intrins.h"

#define   FOSC        11059200UL
#define   BRT         (65536 - FOSC / 115200 / 4)

sfr       AUXR    =   0x8e;
sfr       T2H     =   0xd6;
sfr       T2L     =   0xd7;
sfr       S2CON   =   0x9a;
sfr       S2BUF   =   0x9b;
sfr       IE2     =   0xaf;

bit       busy;
char      wptr;
char      rptr;
char      buffer[16];

void Uart2Isr() interrupt 8
{
    if (S2CON & 0x02)
    {
        S2CON &= ~0x02;
        busy = 0;
    }
    if (S2CON & 0x01)
    {
        S2CON &= ~0x01;
        buffer[wptr++] = S2BUF;
        wptr &= 0x0f;
    }
}

void Uart2Init()
```

```
{
        S2CON = 0x50;
        T2L = BRT;
        T2H = BRT >> 8;
        AUXR = 0x14;
        wptr = 0x00;
        rptr = 0x00;
        busy = 0;
}

void Uart2Send(char dat)
{
        while (busy);
        busy = 1;
        S2BUF = dat;
}

void Uart2SendStr(char *p)
{
        while (*p)
        {
                Uart2Send(*p++);
        }
}

void main()
{
        Uart2Init();
        IE2 = 0x01;
        EA = 1;
        Uart2SendStr("Uart Test !\r\n");

        while (1)
        {
                if (rptr != wptr)
                {
                        Uart2Send(buffer[rptr++]);
                        rptr &= 0x0f;
                }
        }
}
```

13.6.21 Configure Timer 2 as Baud Rate Generate of serial port 3

Assembly code

```
AUXR        DATA        8EH
T2H         DATA        0D6H
T2L         DATA        0D7H
S3CON       DATA        0ACH
S3BUF       DATA        0ADH
IE2         DATA        0AFH

BUSY        BIT         20H.0
```

```
WPTR        DATA    21H
RPTR        DATA    22H
BUFFER      DATA    23H                     ;16 bytes

            ORG     0000H
            LJMP    MAIN
            ORG     008BH
            LJMP    UART3_ISR

            ORG     0100H

UART3_ISR:
            PUSH    ACC
            PUSH    PSW
            MOV     PSW,#08H

            MOV     A,S3CON
            JNB     ACC.1,CHKRI
            ANL     S3CON,#NOT 02H
            CLR     BUSY
CHKRI:
            JNB     ACC.0,UART3ISR_EXIT
            ANL     S3CON,#NOT 01H
            MOV     A,WPTR
            ANL     A,#0FH
            ADD     A,#BUFFER
            MOV     R0,A
            MOV     @R0,S3BUF
            INC     WPTR
UART3ISR_EXIT:
            POP     PSW
            POP     ACC
            RETI

UART3_INIT:
            MOV     S3CON,#10H
            MOV     T2L,#0E8H               ;65536-11059200/115200/4=0FFE8H
            MOV     T2H,#0FFH
            MOV     AUXR,#14H
            CLR     BUSY
            MOV     WPTR,#00H
            MOV     RPTR,#00H
            RET

UART3_SEND:
            JB      BUSY,$
            SETB    BUSY
            MOV     S3BUF,A
            RET

UART3_SENDSTR:
            CLR     A
            MOVC    A,@A+DPTR
            JZ      SEND3END
            LCALL   UART3_SEND
            INC     DPTR
            JMP     UART3_SENDSTR
SEND3END:
```

```
                RET

MAIN:
                MOV     SP,#3FH

                LCALL   UART3_INIT
                MOV     IE2,#08H
                SETB    EA

                MOV     DPTR,#STRING
                LCALL   UART3_SENDSTR

LOOP:
                MOV     A,RPTR
                XRL     A,WPTR
                ANL     A,#0FH
                JZ      LOOP
                MOV     A,RPTR
                ANL     A,#0FH
                ADD     A,#BUFFER
                MOV     R0,A
                MOV     A,@R0
                LCALL   UART3_SEND
                INC     RPTR
                JMP     LOOP

STRING:         DB      'Uart Test !',0DH,0AH,00H

                END
```

C code

```
#include "reg51.h"
#include "intrins.h"

#define     FOSC        11059200UL
#define     BRT         (65536 - FOSC / 115200 / 4)

sfr         AUXR    =   0x8e;
sfr         T2H     =   0xd6;
sfr         T2L     =   0xd7;
sfr         S3CON   =   0xac;
sfr         S3BUF   =   0xad;
sfr         IE2     =   0xaf;

bit         busy;
char        wptr;
char        rptr;
char        buffer[16];

void Uart3Isr() interrupt 17
{
    if (S3CON & 0x02)
    {
        S3CON &= ~0x02;
        busy = 0;
    }
    if (S3CON & 0x01)
```

```
        {
                S3CON &= ~0x01;
                buffer[wptr++] = S3BUF;
                wptr &= 0x0f;
        }
}

void Uart3Init()
{
        S3CON = 0x10;
        T2L = BRT;
        T2H = BRT >> 8;
        AUXR = 0x14;
        wptr = 0x00;
        rptr = 0x00;
        busy = 0;
}

void Uart3Send(char dat)
{
        while (busy);
        busy = 1;
        S3BUF = dat;
}

void Uart3SendStr(char *p)
{
        while (*p)
        {
                Uart3Send(*p++);
        }
}

void main()
{
        Uart3Init();
        IE2 = 0x08;
        EA = 1;
        Uart3SendStr("Uart Test !\r\n");

        while (1)
        {
                if (rptr != wptr)
                {
                        Uart3Send(buffer[rptr++]);
                        rptr &= 0x0f;
                }
        }
}
```

13.6.22 Configure Timer 2 as Baud Rate Generate of serial port 4

Assembly code

```
AUXR        DATA    8EH
T2H         DATA    0D6H
T2L         DATA    0D7H
S4CON       DATA    84H
S4BUF       DATA    085H
IE2         DATA    0AFH

BUSY        BIT     20H.0
WPTR        DATA    21H
RPTR        DATA    22H
BUFFER      DATA    23H                     ;16 bytes

            ORG     0000H
            LJMP    MAIN
            ORG     0093H
            LJMP    UART4_ISR

            ORG     0100H

UART4_ISR:
            PUSH    ACC
            PUSH    PSW
            MOV     PSW,#08H

            MOV     A,S4CON
            JNB     ACC.1,CHKRI
            ANL     S4CON,#NOT 02H
            CLR     BUSY
CHKRI:
            JNB     ACC.0,UART4ISR_EXIT
            ANL     S4CON,#NOT 01H
            MOV     A,WPTR
            ANL     A,#0FH
            ADD     A,#BUFFER
            MOV     R0,A
            MOV     @R0,S4BUF
            INC     WPTR
UART4ISR_EXIT:
            POP     PSW
            POP     ACC
            RETI

UART4_INIT:
            MOV     S4CON,#10H
            MOV     T2L,#0E8H               ;65536-11059200/115200/4=0FFE8H
            MOV     T2H,#0FFH
            MOV     AUXR,#14H
            CLR     BUSY
            MOV     WPTR,#00H
            MOV     RPTR,#00H
            RET

UART4_SEND:
            JB      BUSY,$
            SETB    BUSY
            MOV     S4BUF,A
            RET
```

```
UART4_SENDSTR:
                CLR     A
                MOVC    A,@A+DPTR
                JZ      SEND4END
                LCALL   UART4_SEND
                INC     DPTR
                JMP     UART4_SENDSTR
SEND4END:
                RET

MAIN:
                MOV     SP,#3FH

                LCALL   UART4_INIT
                MOV     IE2,#10H
                SETB    EA

                MOV     DPTR,#STRING
                LCALL   UART4_SENDSTR

LOOP:
                MOV     A,RPTR
                XRL     A,WPTR
                ANL     A,#0FH
                JZ      LOOP
                MOV     A,RPTR
                ANL     A,#0FH
                ADD     A,#BUFFER
                MOV     R0,A
                MOV     A,@R0
                LCALL   UART4_SEND
                INC     RPTR
                JMP     LOOP

STRING:         DB      'Uart Test !',0DH,0AH,00H

                END
```

C code

```
#include "reg51.h"
#include "intrins.h"

#define     FOSC        11059200UL
#define     BRT         (65536 - FOSC / 115200 / 4)

sfr         AUXR    =   0x8e;
sfr         T2H     =   0xd6;
sfr         T2L     =   0xd7;
sfr         S4CON   =   0x84;
sfr         S4BUF   =   0x85;
sfr         IE2     =   0xaf;

bit         busy;
char        wptr;
char        rptr;
char        buffer[16];
```

```
void Uart4Isr() interrupt 18
{
	if (S4CON & 0x02)
	{
		S4CON &= ~0x02;
		busy = 0;
	}
	if (S4CON & 0x01)
	{
		S4CON &= ~0x01;
		buffer[wptr++] = S4BUF;
		wptr &= 0x0f;
	}
}

void Uart4Init()
{
	S4CON = 0x10;
	T2L = BRT;
	T2H = BRT >> 8;
	AUXR = 0x14;
	wptr = 0x00;
	rptr = 0x00;
	busy = 0;
}

void Uart4Send(char dat)
{
	while (busy);
	busy = 1;
	S4BUF = dat;
}

void Uart4SendStr(char *p)
{
	while (*p)
	{
		Uart4Send(*p++);
	}
}

void main()
{
	Uart4Init();
	IE2 = 0x10;
	EA = 1;
	Uart4SendStr("Uart Test !\r\n");

	while (1)
	{
		if (rptr != wptr)
		{
			Uart4Send(buffer[rptr++]);
			rptr &= 0x0f;
		}
	}
}
```

13.6.23 Timer 3(Automatic reloading for 16 bits)

Assembly code

```
The operating frequency is 11.0592 MHz
T3L         DATA    0D5H
T3H         DATA    0D4H
T4T3M       DATA    0D1H
IE2         DATA    0AFH
ET3         EQU     20H
AUXINTIF    DATA    0EFH
T3IF        EQU     02H

            ORG     0000H
            LJMP    MAIN
            ORG     009BH
            LJMP    TM3ISR

            ORG     0100H
TM3ISR:
            CPL     P1.0                ;port of the test
            ANL     AUXINTIF,#NOT T3IF  ;clear the symbol of interrupt
            RETI

MAIN:
            MOV     SP,#3FH

            MOV     T3L,#66H            ;65536-11.0592M/12/1000
            MOV     T3H,#0FCH
            MOV     T4T3M,#08H          ;start the timer
            MOV     IE2,#ET3            ;enable the interrupt of timer
            SETB    EA

            JMP     $

            END
```

C code

```
#include "reg51.h"
#include "intrins.h"

//The operating frequency is 11.0592 MHz

sfr     T3L         =   0xd5;
sfr     T3H         =   0xd4;
sfr     T4T3M       =   0xd1;
sfr     IE2         =   0xaf;
#define ET3             0x20
sfr     AUXINTIF    =   0xef;
#define T3IF            0x02

sbit    P10         =   P1^0;

void TM3_Isr() interrupt 19
{
```

```
    P10 = !P10;                     //port of the test
    AUXINTIF &= ~T3IF;              //clear the symbol of interrupt
}

void main()
{
    T3L = 0x66;                     //65536-11.0592M/12/1000
    T3H = 0xfc;
    T4T3M = 0x08;                   //start the timer
    IE2 = ET3;                      //enable the interrupt of timer
    EA = 1;

    while (1);
}
```

13.6.24 Timer 3(External counting — set T3 as the external interrupt for falling edge)

Assembly code

```
The operating frequency is 11.0592 MHz
T3L         DATA    0D5H
T3H         DATA    0D4H
T4T3M       DATA    0D1H
IE2         DATA    0AFH
ET3         EQU     20H
AUXINTIF    DATA    0EFH
T3IF        EQU     02H

            ORG     0000H
            LJMP    MAIN
            ORG     009BH
            LJMP    TM3ISR

            ORG     0100H
TM3ISR:
            CPL     P1.0                ;port of the test
            ANL     AUXINTIF,#NOT T3IF  ;clear the symbol of interrupt
            RETI

MAIN:
            MOV     SP,#3FH

            MOV     T3L,#0FFH
            MOV     T3H,#0FFH
            MOV     T4T3M,#0CH          ;set External counting mode and start the timer
            MOV     IE2,#ET3            ;enable the interrupt of timer
            SETB    EA

            JMP     $

            END
```

C code

```
#include "reg51.h"
#include "intrins.h"

//The operating frequency is 11.0592 MHz

sfr     T3L         =   0xd5;
sfr     T3H         =   0xd4;
sfr     T4T3M       =   0xd1;
sfr     IE2         =   0xaf;
#define ET3             0x20
sfr     AUXINTIF    =   0xef;
#define T3IF            0x02

sbit    P10         =   P1^0;

void TM3_Isr() interrupt 19
{
    P10 = !P10;                     //port of the test
    AUXINTIF &= ~T3IF;              //clear the symbol of interrupt
}

void main()
{
    T3L = 0xff;
    T3H = 0xff;
    T4T3M = 0x0c;                   //set External counting mode and start the timer
    IE2 = ET3;                      //enable the interrupt of timer
    EA = 1;

    while (1);
}
```

13.6.25 Timer 3(clock divider output)

Assembly code

```
The operating frequency is 11.0592 MHz
T3L         DATA    0D5H
T3H         DATA    0D4H
T4T3M       DATA    0D1H

            ORG     0000H
            LJMP    MAIN

            ORG     0100H
MAIN:
            MOV     SP,#3FH

            MOV     T3L,#66H            ;65536-11.0592M/12/1000
            MOV     T3H,#0FCH
            MOV     T4T3M,#09H          ;enable the output of timer #start the timer

            JMP     $

            END
```

C code

```
#include "reg51.h"
#include "intrins.h"

//The operating frequency is 11.0592 MHz

sfr     T3L     =   0xd5;
sfr     T3H     =   0xd4;
sfr     T4T3M   =   0xd1;

void main()
{
    T3L = 0x66;                 //65536-11.0592M/12/1000
    T3H = 0xfc;
    T4T3M = 0x09;               //enable the output of timer 并start the timer

    while (1);
}
```

13.6.26 Configure Timer 3 as Baud Rate Generate of serial port 3

Assembly code

```
T4T3M       DATA    0D1H
T3H         DATA    0D4H
T3L         DATA    0D5H
S3CON       DATA    0ACH
S3BUF       DATA    0ADH
IE2         DATA    0AFH

BUSY        BIT     20H.0
WPTR        DATA    21H
RPTR        DATA    22H
BUFFER      DATA    23H                 ;16 bytes

            ORG     0000H
            LJMP    MAIN
            ORG     008BH
            LJMP    UART3_ISR

            ORG     0100H

UART3_ISR:
            PUSH    ACC
            PUSH    PSW
            MOV     PSW,#08H

            MOV     A,S3CON
            JNB     ACC.1,CHKRI
            ANL     S3CON,#NOT 02H
            CLR     BUSY
CHKRI:
            JNB     ACC.0,UART3ISR_EXIT
            ANL     S3CON,#NOT 01H
```

```
            MOV     A,WPTR
            ANL     A,#0FH
            ADD     A,#BUFFER
            MOV     R0,A
            MOV     @R0,S3BUF
            INC     WPTR
UART3ISR_EXIT:
            POP     PSW
            POP     ACC
            RETI

UART3_INIT:
            MOV     S3CON,#50H
            MOV     T3L,#0E8H           ;65536-11059200/115200/4=0FFE8H
            MOV     T3H,#0FFH
            MOV     T4T3M,#0AH
            CLR     BUSY
            MOV     WPTR,#00H
            MOV     RPTR,#00H
            RET

UART3_SEND:
            JB      BUSY,$
            SETB    BUSY
            MOV     S3BUF,A
            RET

UART3_SENDSTR:
            CLR     A
            MOVC    A,@A+DPTR
            JZ      SEND3END
            LCALL   UART3_SEND
            INC     DPTR
            JMP     UART3_SENDSTR
SEND3END:
            RET

MAIN:
            MOV     SP,#3FH

            LCALL   UART3_INIT
            MOV     IE2,#08H
            SETB    EA

            MOV     DPTR,#STRING
            LCALL   UART3_SENDSTR

LOOP:
            MOV     A,RPTR
            XRL     A,WPTR
            ANL     A,#0FH
            JZ      LOOP
            MOV     A,RPTR
            ANL     A,#0FH
            ADD     A,#BUFFER
            MOV     R0,A
            MOV     A,@R0
            LCALL   UART3_SEND
```

```
                INC     RPTR
                JMP     LOOP

STRING:         DB      'Uart Test !',0DH,0AH,00H

                END
```

C code

```
#include "reg51.h"
#include "intrins.h"

#define   FOSC        11059200UL
#define   BRT         (65536 - FOSC / 115200 / 4)

sfr       T4T3M     =   0xd1;
sfr       T3H       =   0xd4;
sfr       T3L       =   0xd5;
sfr       S3CON     =   0xac;
sfr       S3BUF     =   0xad;
sfr       IE2       =   0xaf;

bit       busy;
char      wptr;
char      rptr;
char      buffer[16];

void Uart3Isr() interrupt 17
{
    if (S3CON & 0x02)
    {
        S3CON &= ~0x02;
        busy = 0;
    }
    if (S3CON & 0x01)
    {
        S3CON &= ~0x01;
        buffer[wptr++] = S3BUF;
        wptr &= 0x0f;
    }
}

void Uart3Init()
{
    S3CON = 0x50;
    T3L = BRT;
    T3H = BRT >> 8;
    T4T3M = 0x0a;
    wptr = 0x00;
    rptr = 0x00;
    busy = 0;
}

void Uart3Send(char dat)
{
    while (busy);
    busy = 1;
    S3BUF = dat;
```

```
}

void Uart3SendStr(char *p)
{
	while (*p)
	{
		Uart3Send(*p++);
	}
}

void main()
{
	Uart3Init();
	IE2 = 0x08;
	EA = 1;
	Uart3SendStr("Uart Test !\r\n");

	while (1)
	{
		if (rptr != wptr)
		{
			Uart3Send(buffer[rptr++]);
			rptr &= 0x0f;
		}
	}
}
```

13.6.27 Timer4 (Automatic reloading for 16 bits)

Assembly code

```
The operating frequency is 11.0592 MHz
T4L		DATA		0D3H
T4H		DATA		0D2H
T4T3M		DATA		0D1H
IE2		DATA		0AFH
ET4		EQU		40H
AUXINTIF	DATA		0EFH
T4IF		EQU		04H

		ORG		0000H
		LJMP		MAIN
		ORG		00A3H
		LJMP		TM4ISR

		ORG		0100H
TM4ISR:
		CPL		P1.0			;port of the test
		ANL		AUXINTIF,#NOT T4IF	;clear the symbol of interrupt
		RETI

MAIN:
		MOV		SP,#3FH

		MOV		T4L,#66H		;65536-11.0592M/12/1000
		MOV		T4H,#0FCH
		MOV		T4T3M,#80H		;start the timer
```

```
        MOV     IE2,#ET4            ;enable the interrupt of timer
        SETB    EA

        JMP     $

        END
```

C code

```
#include "reg51.h"
#include "intrins.h"

//The operating frequency is 11.0592 MHz

sfr     T4L         =   0xd3;
sfr     T4H         =   0xd2;
sfr     T4T3M       =   0xd1;
sfr     IE2         =   0xaf;
#define ET4             0x40
sfr     AUXINTIF    =   0xef;
#define T4IF            0x04

sbit    P10         =   P1^0;

void TM4_Isr() interrupt 20
{
    P10 = !P10;                 //port of the test
    AUXINTIF &= ~T4IF;          //clear the symbol of interrupt
}

void main()
{
    T4L = 0x66;                 //65536-11.0592M/12/1000
    T4H = 0xfc;
    T4T3M = 0x80;               //start the timer
    IE2 = ET4;                  //enable the interrupt of timer
    EA = 1;

    while (1);
}
```

13.6.28 Timer4 (External counting－set T4 as the external interrupt for falling edge)

Assembly code

```
The operating frequency is 11.0592 MHz
T4L         DATA    0D3H
T4H         DATA    0D2H
T4T3M       DATA    0D1H
IE2         DATA    0AFH
ET4         EQU     40H
AUXINTIF    DATA    0EFH
T4IF        EQU     04H
```

```
                ORG     0000H
                LJMP    MAIN
                ORG     00A3H
                LJMP    TM4ISR

                ORG     0100H
TM4ISR:
                CPL     P1.0                    ;port of the test
                ANL     AUXINTIF,#NOT T4IF      ;clear the symbol of interrupt
                RETI

MAIN:
                MOV     SP,#3FH

                MOV     T4L,#0FFH
                MOV     T4H,#0FFH
                MOV     T4T3M,#0C0H             ;set External counting mode and start the timer
                MOV     IE2,#ET4                ;enable the interrupt of timer
                SETB    EA

                JMP     $

                END
```

C code

```
#include "reg51.h"
#include "intrins.h"

//The operating frequency is 11.0592 MHz

sfr     T4L         =   0xd3;
sfr     T4H         =   0xd2;
sfr     T4T3M       =   0xd1;
sfr     IE2         =   0xaf;
#define ET4             0x40
sfr     AUXINTIF    =   0xef;
#define T4IF            0x04

sbit    P10         =   P1^0;

void TM4_Isr() interrupt 20
{
    P10 = !P10;                     //port of the test
    AUXINTIF &= ~T4IF;              //clear the symbol of interrupt
}

void main()
{
    T4L = 0xff;
    T4H = 0xff;
    T4T3M = 0xc0;                   //set External counting mode and start the timer
    IE2 = ET4;                      //enable the interrupt of timer
    EA = 1;

    while (1);
}
```

13.6.29 Timer4(clock divider output)

Assembly code

```
The operating frequency is 11.0592 MHz
T4L         DATA    0D3H
T4H         DATA    0D2H
T4T3M       DATA    0D1H

            ORG     0000H
            LJMP    MAIN

            ORG     0100H
MAIN:
            MOV     SP,#3FH

            MOV     T4L,#66H            ;65536-11.0592M/12/1000
            MOV     T4H,#0FCH
            MOV     T4T3M,#90H          ;enable the output of timer and start the timer

            JMP     $

            END
```

C code

```
#include "reg51.h"
#include "intrins.h"

//The operating frequency is 11.0592 MHz

sfr     T4L     =   0xd3;
sfr     T4H     =   0xd2;
sfr     T4T3M   =   0xd1;

void main()
{
    T4L = 0x66;             //65536-11.0592M/12/1000
    T4H = 0xfc;
    T4T3M = 0x90;           //enable the output of timer and start the timer

    while (1);
}
```

13.6.30 Configure Timer 4 as Baud Rate Generate of serial port 4

Assembly code

```
T4T3M       DATA    0D1H
T4H         DATA    0D2H
T4L         DATA    0D3H
S4CON       DATA    84H
S4BUF       DATA    085H
```

```
IE2         DATA    0AFH

BUSY        BIT     20H.0
WPTR        DATA    21H
RPTR        DATA    22H
BUFFER      DATA    23H                     ;16 bytes

            ORG     0000H
            LJMP    MAIN
            ORG     0093H
            LJMP    UART4_ISR

            ORG     0100H

UART4_ISR:
            PUSH    ACC
            PUSH    PSW
            MOV     PSW,#08H

            MOV     A,S4CON
            JNB     ACC.1,CHKRI
            ANL     S4CON,#NOT 02H
            CLR     BUSY
CHKRI:
            JNB     ACC.0,UART4ISR_EXIT
            ANL     S4CON,#NOT 01H
            MOV     A,WPTR
            ANL     A,#0FH
            ADD     A,#BUFFER
            MOV     R0,A
            MOV     @R0,S4BUF
            INC     WPTR
UART4ISR_EXIT:
            POP     PSW
            POP     ACC
            RETI

UART4_INIT:
            MOV     S4CON,#50H
            MOV     T4L,#0E8H               ;65536-11059200/115200/4=0FFE8H
            MOV     T4H,#0FFH
            MOV     T4T3M,#0A0H
            CLR     BUSY
            MOV     WPTR,#00H
            MOV     RPTR,#00H
            RET

UART4_SEND:
            JB      BUSY,$
            SETB    BUSY
            MOV     S4BUF,A
            RET

UART4_SENDSTR:
            CLR     A
            MOVC    A,@A+DPTR
            JZ      SEND4END
            LCALL   UART4_SEND
```

```
                INC     DPTR
                JMP     UART4_SENDSTR
SEND4END:
                RET

MAIN:
                MOV     SP,#3FH

                LCALL   UART4_INIT
                MOV     IE2,#10H
                SETB    EA

                MOV     DPTR,#STRING
                LCALL   UART4_SENDSTR

LOOP:
                MOV     A,RPTR
                XRL     A,WPTR
                ANL     A,#0FH
                JZ      LOOP
                MOV     A,RPTR
                ANL     A,#0FH
                ADD     A,#BUFFER
                MOV     R0,A
                MOV     A,@R0
                LCALL   UART4_SEND
                INC     RPTR
                JMP     LOOP

STRING:         DB      'Uart Test !',0DH,0AH,00H

                END
```

C code

```
#include "reg51.h"
#include "intrins.h"

#define     FOSC        11059200UL
#define     BRT         (65536 - FOSC / 115200 / 4)

sfr         T4T3M       =   0xd1;
sfr         T4H         =   0xd2;
sfr         T4L         =   0xd3;
sfr         S4CON       =   0x84;
sfr         S4BUF       =   0x85;
sfr         IE2         =   0xaf;

bit         busy;
char        wptr;
char        rptr;
char        buffer[16];

void Uart4Isr() interrupt 18
{
    if (S4CON & 0x02)
    {
        S4CON &= ~0x02;
```

```
            busy = 0;
        }
        if (S4CON & 0x01)
        {
            S4CON &= ~0x01;
            buffer[wptr++] = S4BUF;
            wptr &= 0x0f;
        }
}

void Uart4Init()
{
        S4CON = 0x50;
        T4L = BRT;
        T4H = BRT >> 8;
        T4T3M = 0xa0;
        wptr = 0x00;
        rptr = 0x00;
        busy = 0;
}

void Uart4Send(char dat)
{
        while (busy);
        busy = 1;
        S4BUF = dat;
}

void Uart4SendStr(char *p)
{
        while (*p)
        {
            Uart4Send(*p++);
        }
}

void main()
{
        Uart4Init();
        IE2 = 0x10;
        EA = 1;
        Uart4SendStr("Uart Test !\r\n");

        while (1)
        {
            if (rptr != wptr)
            {
                Uart4Send(buffer[rptr++]);
                rptr &= 0x0f;
            }
        }
}
```

14 Serial Port (UART) Communication

STC8F series microcontrollers have 4 full duplex asynchronous serial communication interfaces (serial port 1, serial port 2, serial port 3 and serial port 4). Each serial port consists of two data buffers, a shift register, a serial control register and a baud rate generator. Each serial port data buffer consists of two independent receive and transmit buffers, which can transmit and receive data simultaneously.

There are 4 modes for serial port 1 of STC8F series of microcontrollers, among them, the baud rates of two modes are variable, the baud rates of the other two modes are fixed, which can be chosen for different applications. Serial port 2, serial port 3, serial port 4 have only two modes, and their baud rates are variable. Different baud rates and different modes can be set by the software. It is flexible for the host to query the receiving or sending process, or use the interrupt method.

All the pins of serial port 1, serial port 2, serial port 3 and serial port 4 can be switched among multiple groups of ports, so that a serial port can be multiplexed into serial ports in a time-sharing manner.

14.1 Serial Port Related Registers

Symbol	Description	Address	Bit Address and Symbol								Value after reset
			B7	B6	B5	B4	B3	B2	B1	B0	
SCON	Serial port 1 control	98H	SM0/FE	SM1	SM2	REN	TB8	RB8	TI	RI	0000,0000
SBUF	Serial port 1 data buffer register	99H									0000,0000
S2CON	Serial port 2 control	9AH	S2SM0	-	S2SM2	S2REN	S2TB8	S2RB8	S2TI	S2RI	0100,0000
S2BUF	Serial port 2 data buffer register	9BH									0000,0000
S3CON	Serial port 3 control	ACH	S3SM0	S3ST3	S3SM2	S3REN	S3TB8	S3RB8	S3TI	S3RI	0000,0000
S3BUF	Serial port 3 data buffer register	ADH									0000,0000
S4CON	Serial port 4 control	84H	S4SM0	S4ST4	S4SM2	S4REN	S4TB8	S4RB8	S4TI	S4RI	0000,0000
S4BUF	Serial port 4 data buffer register	85H									0000,0000
PCON	Power control register	87H	SMOD	SMOD0	LVDF	POF	GF1	GF0	PD	IDL	0011,0000
AUXR	Auxiliary register 1	8EH	T0x12	T1x12	UART_M0x6	T2R	T2_C/T	T2x12	EXTRAM	S1ST2	0000,0001
AUXR2	Auxiliary register 2	97H	-	-	-	TXLNRX	-	-	-	-	xxxn,xxxx
SADDR	Serial port address register	A9H									0000,0000
SADEN	Serial port address enable	B9H									0000,0000

14.2 Serial Port 1

Serial port 1 control register

Symbol	Address	B7	B6	B5	B4	B3	B2	B1	B0
SCON	98H	SM0/FE	SM1	SM2	REN	TB8	RB8	TI	RI

SM0/FE: If the SMOD0 bit in the PCON register is 1, this bit is the frame error detection flag. When the UART detects an invalid stop bit during reception, it is set by the UART receiver and must be cleared by

software. If SMOD0 bit in PCON register is 0, this bit and SM1 specify the communication mode of serial port 1 as shown in the following table:

SM0	SM1	the communication mode of serial port 1	Function description
0	0	Mode 0	synchronous shift serial mode
0	1	Mode 1	8-bit UART, whose baud-rate is variable
1	0	Mode 2	9-bit UART, whose baud-rate is fixed
1	1	Mode 3	9-bit UART, whose baud-rate is variable

SM2: Mode 2 or mode 3 multi-machine communication enable control bit. When serial port 1 adopts mode 2 or mode 3, if the SM2 bit is 1 and the REN bit is 1, the receiver is in the Address Frame Filter state. In this case, the received 9th bit (RB8) can be used to filter the address frame. If RB8 = 1, it indicates that the frame is an address frame, the address information can enter SBUF and the RI is 1, and then the address information is compared in the interrupt service routine. If RB8 = 0, it indicates that the frame is not an address frame, which should be discarded and keep RI = 0. In mode 2 or mode 3, if the SM2 bit is 0 and the REN bit is 1, the receiver is in a state where the address frame filtering is disabled. The received message can enter SBUF regardless of whether RB8 is 0 or 1, and make RI = 1. Here, RB8 is usually used as a check bit. Mode 1 and mode 0 are non-multi-machine communication modes. In these two modes, SM2 should be set to 0.

REN: Receive enable control bit.

0: disable serial port receive data.

1: enable serial port receive data.

TB8: The 9th bit be transmitted for serial port 1in mode 2 and 3. It can be set or cleared by software. It is notused in mode 0 and mode 1.

RB8: The 9th bit received for serial port 1in mode 2 and 3 which is usually used as a check bit or address frame/data frame flag. . It is notused in mode 0 and mode 1.

TI: Transmit interrupt request flag of serial port 1. In mode 0, when the ransmission of the 8th bit is completed, TI is set by the hardware automatically and requests the interrupt to the CPU. After the CPU responds the interrupt, TI must be cleared by software. In other modes, TI is set by the hardware automatically at the start of the stop bit transmittion and requests interrupts to the CPU. TI must be cleared by software after the interrupt is serviced.

RI: Receive interrupt request flag of serial port 1. In mode 0, when the serial port receives the 8th bit of datum, RI is set by the hardware automatically and requests interrupt to the CPU. After the interrupt is serviced, RI must be cleared by software. In other modes, RI is set by hardware automatically at the middle of stop bit the serial port received, and requests the interrupt to the CPU. After the interrupt is serviced, RI must be cleared by software.

Serial port 1 data buffer

Symbol	Address	B7	B6	B5	B4	B3	B2	B1	B0
SBUF	99H								

SBUF: It is used as the buffer in transmission and reception. SBUF is actually two buffers, read buffer and write buffer. Two operations correspond to two different registers, one is write-only register (write buffer), the other is read-only register (read buffer). Actually the CPU reads serial receive buffer when reads SBUF, and writes to the SBUF will trigger the serial port to start sending data.

Power control register

Symbol	Address	B7	B6	B5	B4	B3	B2	B1	B0
PCON	87H	SMOD	SMOD0	LVDF	POF	GF1	GF0	PD	IDL

SMOD: double Baud rate of serial port 1control bit.

0: disable double baud rate of the uart1.

1: enable double baud rate of the uart1.

SMOD0: Frame error detection control bit.

0: No frame error detection function, SCON.7 is SM0 function.

1: enable frame error detection function. The function of SM0/FE is FE.

Auxiliary register 1

Symbol	Address	B7	B6	B5	B4	B3	B2	B1	B0
AUXR	8EH	T0x12	T1x12	UART_M0x6	T2R	T2_C/T	T2x12	EXTRAM	S1ST2

UART_M0x6: Baud rate select bit of UART1 while it works in mode 0.

0: The baud-rate of UART in mode 0 is SYSclk/12.

1: The baud-rate of UART in mode 0 is SYSclk/2.

S1ST2: Serial port 1 baud rate generator select bit.

0: Select Timer 1 as the baud-rate generator of UART1.

1: Select Timer 2 as the baud-rate generator of UART1.

Auxiliary register 2

Symbol	Address	B7	B6	B5	B4	B3	B2	B1	B0
AUXR2	97H	-	-	-	TXLNRX	-	-	-	-

TXLNRX: Serial port 1 broadcast mode control bit.

0: Serial port 1 is in nomal mode.

1: Serial port 1 is in broadcast mode. That is, the RxD pin status is output to TxD pin in real time. The TxD external pin can amplify and output the RxD pin signal in real time.

STC MCU

14.2.1 Serial Port 1 Mode 0

When mode 0 is selected for serial port 1, the serial port 1 operates in synchronous shift register mode. When the serial port mode 0 communication speed setting bit UART_M0x6 is 0, the baud rate is fixed to SYSclk/12. When UART_M0x6 is 1, the baud rate is fixed to SYSclk/2. RxD is used as serial communication data pin, TxD is used as synchronous shift pulse output pin. 8-bit data are transmitted and received, LSB first.

Transmission process of mode 0: Transmission is initiated by any instruction that write data to SBUF. The 8-bit datum is output from the RxD pin at the baud rate of SYSclk/12 or SYSclk/2 (determined by the UART_M0x6 divided by 12 or 2) , from LSB to MSB. The interrupt flag TI is set when transmittion is completed. The TxD pin outputs the synchronous shift pulse signal. When the write signal is valid, the transmit control signal SEND is active (high) one clock apart, allowing RxD to send data while allowing the TxD output the synchronous shift pulse. When a frame (8 bits) of datum is sent, all control signals are restored to the original status, and only TI keeps high level and keeps the interrupt request status. TI must be cleared by

software before sending data again.

Receiving process of mode 0: Receiving is initiated by setting REN=1 and the receive interrupt request flag RI=0. After starting the receive process, RxD is the serial data input pin and TxD is the synchronous pulse output pin. The serial receiving baud rate is SYSclk/12 or SYSclk/2 (determined by UART_M0x6 is 12 or 2). After receiving a frame of data (8 bits), the control signal is reset and the interrupt flag RI is set to 1, and interrupt requet status appears. RI must be cleared by software for the next receiving data.

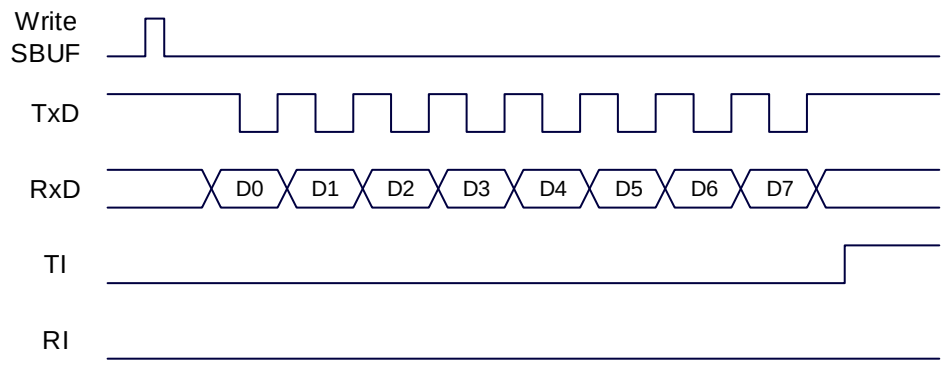

Transmitting data (Serial port 1 mode 0)

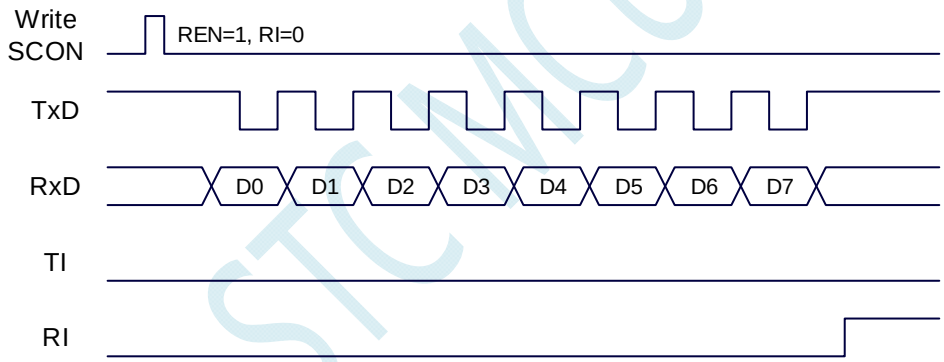

Receiving data (Serial port 1 mode 0)

When operating in mode 0, SM2 must be cleared so that TB8 and RB8 bits are not affected. Since the baud rate is fixed at SYSclk/12 or SYSclk/2, no timer is required and the clock of the microcontroller is used as the synchronous shift pulse directly.

The baud rates of serial port 1 mode 0 are shown in the following table, where SYSclk is the system operating frequency:

UART_M0x6	Baud rate calculation formula
0	$\text{Baud rate} = \frac{\text{SYSclk}}{12}$
1	$\text{Baud rate} = \frac{\text{SYSclk}}{2}$

14.2.2 Serial Port 1 Mode 1

If SM0 and SM1 of SCON are set to "01" by the software, serial port 1 will work in mode 1. This is a 8-bit UART format, where a frame of information consists 10 bits: 1 start bit, 8 data bits (LSB first) and 1 stop bit. The baud rate is variable, which can be set by the software as needed. TxD is the data transmitting pin, and RxD is the data receiving pin, the serial port is a full duplex receiver/transmitter.

Transmission process of mode 1: TxD is used as data output pin when transmitting a datum. Transmission is initiated by writing SBUF. "1" is also written into the 9th bit of transmission shift register by the writing "SBUF" signal, and the TX control unit is notified to start sending. The shift register shifts the data right to TxD port to send, and shifts "0" in the left to supplement. When the highest bit of data is shifted to the output of the shift register, it is followed by the ninth bit "1", and all bits to the left of it are "0". This state condition causes the TX control unit to make the last shift output, and then disables the transmission signal "SEND" to complete the transmission of a frame of information and sets the interrupt request TI, and requests interrupt processing to CPU.

Receiving process of mode 1: After the software sets the reception enable flag REN, that is REN = 1, the receiver will detect the RxD pin signal. The receiver is ready to receive data when a "1" → "0" falling edge is detected at RxD pin, and resets the receiving counter of the baud rate generator immediately, loads 1FFH into the shift register. The received datum is shifted in from the right of the receiving shift register, the loaded 1FFH is shifted out to the left. When the start bit "0" is shifted to the left of the shift register, the RX controller shifts for the last time and completes a frame receiving. The received datum is valid only if the following two conditions are met:

- RI=0;
- SM2=0 or the stop bit received is 1.

The datum received is loaded into SBUF, the stop bit is loaded into RB8, RI flag is set to request interrupt to CPU. If the two conditions can not be met at the same time, the received data is invalid and is discarded. Regardless of the conditions are met or not, the receiver will re-test RxD pin of the "1" → "0" edge, and continue to receive the next frame. If the received datum is valid, the RI flag must be cleared by software in the interrupt service routine. Usually, SM2 is set to "0" when serial port is operating in mode 1.

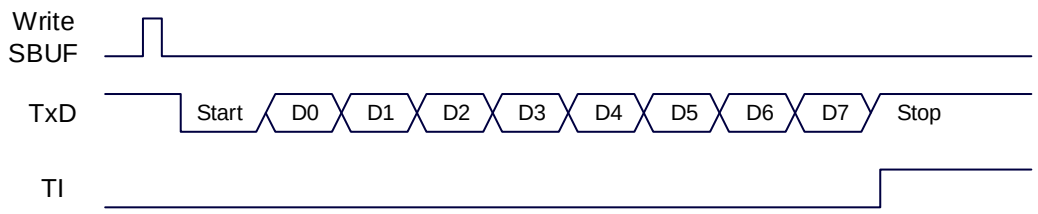

Transmitting data (Serial port 1 mode 1)

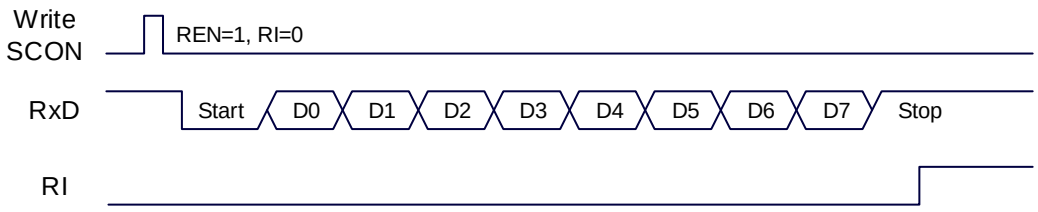

Receiving data (Serial port 1 mode 1)

The baud rate of serial port 1 is variable. It can be generated by timer 1 or timer 2. If the timer is in 1T mode (12x speed), the corresponding baud rate is increased by 12 times.

The baud rate of serial port 1 mode 1 is calculated as follows, where SYSclk is the system operating frequency.

Timer selected	Speed of timer	Baud rate calculation formula
Timer 2	1T	$\text{reload value of timer 2} = 65536 - \frac{SYSclk}{4 \times \text{baud rate}}$
	12T	$\text{reload value of timer 2} = 65536 - \frac{SYSclk}{12 \times 4 \times \text{baud rate}}$
Timer 1 mode 0	1T	$\text{reload value of timer 1} = 65536 - \frac{SYSclk}{4 \times \text{baud rate}}$
	12T	$\text{reload value of timer 1} = 65536 - \frac{SYSclk}{12 \times 4 \times \text{baud rate}}$
Timer 1 mode 2	1T	$\text{reload value of timer 1} = 256 - \frac{SYSclk}{32 \times \text{baud rate}} \times 2^{SMOD}$
	12T	$\text{reload value of timer 1} = 256 - \frac{SYSclk}{12 \times 32 \times \text{baud rate}} \times$

The reload value of the timers corresponding to the common frequency and the common baud rate are as following.

Frequency (MHz)	Baud rate	Timer 2		Timer 1 mode 0		Timer 1 mode 2			
						SMOD=1		SMOD=0	
		1T mode	12T mode	1T mode	12T mode	1T mode	12T mode	1T mode	12T mode
11.0592	115200	FFE8H	FFFEH	FFE8H	FFFEH	FAH	-	FDH	-
	57600	FFD0H	FFFCH	FFD0H	FFFCH	F4H	FFH	FAH	-
	38400	FFB8H	FFFAH	FFB8H	FFFAH	EEH	-	F7H	-
	19200	FF70H	FFF4H	FF70H	FFF4H	DCH	FDH	EEH	-
	9600	FEE0H	FFE8H	FEE0H	FFE8H	B8H	FAH	DCH	FDH
18.432	115200	FFD8H	-	FFD8H	-	F6H	-	FBH	-
	57600	FFB0H	-	FFB0H	-	ECH	-	F6H	-
	38400	FF88H	FFF6H	FF88H	FFF6H	E2H	-	F1H	-
	19200	FF10H	FFECH	FF10H	FFECH	C4H	FBH	E2H	-
	9600	FE20H	FFD8H	FE20H	FFD8H	88H	F6H	C4H	FBH
22.1184	115200	FFD0H	FFFCH	FFD0H	FFFCH	F4H	FFH	FAH	-
	57600	FFA0H	FFF8H	FFA0H	FFF8H	E8H	FEH	F4H	FFH
	38400	FF70H	FFF4H	FF70H	FFF4H	DCH	FDH	EEH	-
	19200	FEE0H	FFE8H	FEE0H	FFE8H	B8H	FAH	DCH	FDH
	9600	FDC0H	FFD0H	FDC0H	FFD0H	70H	F4H	B8H	FAH

14.2.3 Serial Port 1 Mode 2

If the two bits of SM0 and SM1 are 10, serial port 1 operates in mode 2. Serial port 1 operating mode 2 is a 9-bit data asynchronous communication UART. One frame information consists of 11 bits: 1 start bit, 8 data bits (LSB first), 1 programmable bit (9th bit) and 1 stop bit. The transmit programmable bit (9th bit) is supplied by TB8 in SCON, which can be configured as either 1 or 0 by software. The odd/even parity bit P in the PSW can be loaded into TB8. Not only can TB8 be used as either a multi-machine communication address/data flag, but also it can be used as datum parity check bit. The ninth bit is received into RB8 of SCON. TxD is the transmitting pin, and RxD is the receiving pin, the serial port is a full duplex receiver/transmitter.

The baud rate of mode 2 is fixed to the system clock divided by 64 or 32 depending on the value of SMOD in PCON.

The baud rate of serial port 1 mode 2 is shown in the following table, where SYSclk is the system operating frequency.

SMOD	Baud rate calculation formula
0	$\text{baud rate} = \frac{SYSclk}{64}$
1	$\text{baud rate} = \frac{SYSclk}{32}$

Except that the source of the baud rate is slightly different, and the 9th bit of the shift register supplied by TB8 while is being sent is different, the functional and structure of mode 2 and mode 1 are basically the same, the receiving / sending operation and timing of mode 2 and mode 1are also basically the same.

After the receiver receives a frame of information, the following conditions must be met at the same time.

- RI=0
- SM2=0 or SM2=1 and the 9th bit received RB8=1.

Only when the two conditions above are satisfied at the same time, the data received in shift register is loaded into SBUF and RB8. The RI flag is set to 1, and the interrupt request processing is requested to CPU. If one of the above conditions is not satisfied, the data just received in the shift register is invalid and is discarded, and the RI is not set. Regardless of the above conditions are met or not, the receiver again begins to detect the RxD pin hopping information to receive the next frame of information. In mode 2, the received stop bit is not related to SBUF, RB8 and RI.

It provides for the convenience of multi-machine communication by setting SM2, TB8 of SCON and communication protocol using the software.

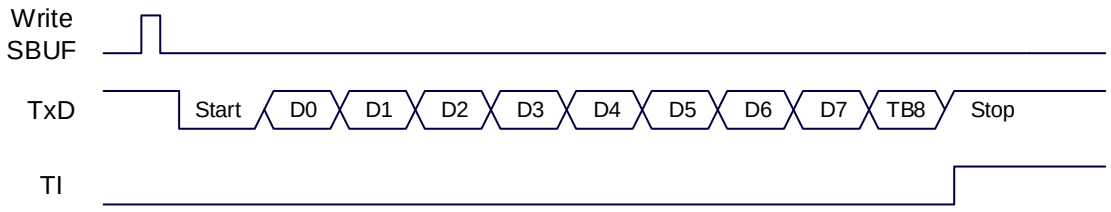

Transmitting data (Serial port 1 mode 2)

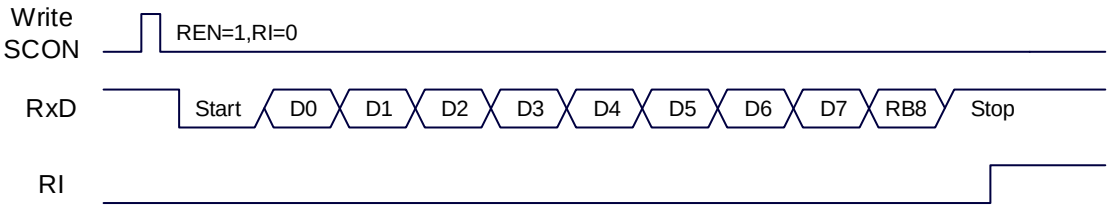

Receiving data (Serial port 1 mode 2)

14.2.4 Serial Port 1 Mode 3

If the two bits of SM0 and SM1 are 11, serial port 1 operates in mode 3. Serial port 1 operating mode 3 is a 9-bit data asynchronous communication UART. One frame information consists of 11 bits: 1 start bit, 8 data bits (LSB first), 1 programmable bit (9th bit) and 1 stop bit. The transmit programmable bit (9th bit) is supplied by TB8 in SCON, which can be confugred as either 1 or 0 by software. The odd/even parity bit P in the PSW can be loaded into TB8. Not only can TB8 be used as either a multi-machine communication address/data flag, but also it can be used as datum parity check bit. The ninth bit is received into RB8 of SCON. TxD is the transmitting pin, and RxD is the receiving pin, the serial port is a full duplex receiver/transmitter.

Except that the 9th bit of the shift register supplied by TB8 while is being sent is different, the functional and structure of mode 3 and mode 1 are basically the same, the receiving / sending operation and timing of mode 3 and mode 1are also basically the same.

After the receiver receives a frame of information, the following conditions must be met at the same time.

- RI=0
- SM2=0 or SM2=1 and the 9th bit received RB8=1.

Only when the two conditions above are satisfied at the same time, the data received in shift register is loaded into SBUF and RB8. The RI flag is set to 1, and the interrupt request processing is requested to CPU. If one of the above conditions is not satisfied, the data just received in the shift register is invalid and is discarded, and the RI is not set. Regardless of the above conditions are met or not, the receiver again begins to detect the RxD pin hopping information to receive the next frame of information. In mode 3, the received stop bit is not related to SBUF, RB8 and RI.

It provides for the convenience of multi-machine communication by setting SM2, TB8 of SCON and communication protocol using the software.

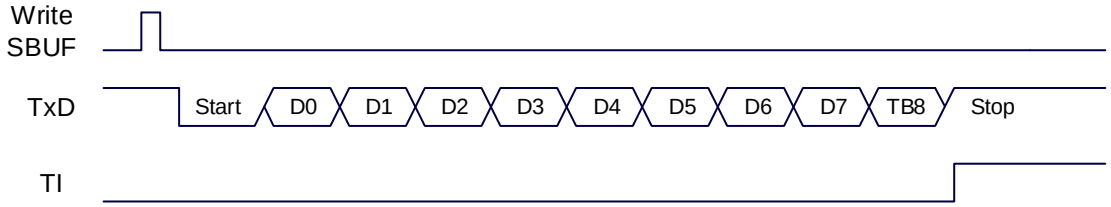

Transmitting data (Serial port 1 mode 3)

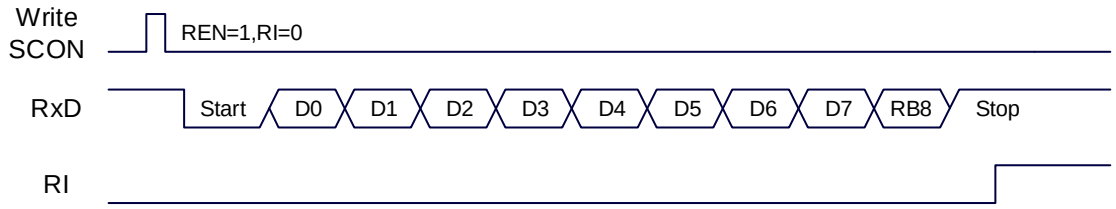

Receiving data (Serial port 1 mode 3)

The baud rate calculation formula of serial port 1 mode 3 is exactly the same as that of mode 1. Please refer to the mode 1 baud rate calculation formula.

14.2.5 Automatic Address Recognition

Serial port 1 slave address control registers

Symbol	Address	B7	B6	B5	B4	B3	B2	B1	B0
SADDR	A9H								
SADEN	B9H								

SADDR: Slave address register

SADEN: Slave address mask register

The automatic address recognition function is typically used in the field of multi-machine communications. Its main principle is that the slave system identifies the address information from the master serial port data stream through the hardware comparison function. The address of the slave is set by the registers SADDR and SADEN. The hardware filters the slave address automatically. The hardware will generate a serial port interrupt when the slave address information from the master matches the slave address set by the slave. Otherwise, the hardware will discard the serial port data automatically without any interruption. When a number of slaves in Idle mode are connected together, only the slave that matches the slave address will wake up from Idle mode. Then the power consumption of the slave MCU reduces greatly. Constantly entering the serial port interrupt which reduces the system execution efficiency can be avoided even if the slave is in normal operation.

To use the automatic address recognition feature of the serial port, mode 2 or mode 3 of the serial port of the MCU that participates in communication is selected. Usually the mode 3 with variable baud rate is selected because the baud rate of mode 2 is fixed , and it is inconvenient to adjust. And SM2 bit of slave SCON is set to 1. The 9th bit which is stored in RB8 of the 9-bit data in serial port working in mode 2 or 3 is the address/data flag. When the 9th bit is 1, it indicates the previous 8-bit datum stored in SBUF is the address information. If SM2 is set to 1, the slave MCU will filter out non-address data whose 9th bit is 0 automatically while the address data whose 9th bit is 1 in SBUF will automatically be matched with the address set in SADDR and SADEN. If the address matches, RI will be set to "1" and an interrupt will occur. Otherwise the received serial data is discarded.

The slave address is set by two registers, SADDR and SADEN. SADDR is the slave address register, where the slave address is stored. SADEN is the slave address mask register, which is used to set the ignore bit

in the address information. The setting method is as follows.

For example

SADDR ＝ 11001010

SADEN ＝ 10000001

Then the matched address is 1xxxxxx0

That is, as long as bit 0 is 0 and bit 7 is 1 in the address data sent by the master, the address can be matched with the local address.

Another example

SADDR ＝ 11001010

SADEN ＝ 00001111

Then the matched address is xxxx1010

That is, as long as the low 4 bits are 1010 in the address data sent by the master, the address can be matched with the local address. The high 4 bits are ignored.

The Broadcast Address (FFH) can be used by the master select all the slaves simultaneously for communication.

14.3 Serial Port 2

Serial port 2 control register

Symbol	Address	B7	B6	B5	B4	B3	B2	B1	B0
S2CON	9AH	S2SM0	-	S2SM2	S2REN	S2TB8	S2RB8	S2TI	S2RI

S2SM0: Serial port 2 mode select bit.

S2SM0	Serial port 2 mode	Function description
0	Mode 0	8-bit UART, whose baud-rate is variable
1	Mode 1	9-bit UART, whose baud-rate is variable

S2SM2: Serial port 2 multi-machine communication control enable bit. In mode 1, if the S2SM2 bit is 1 and the S2REN bit is 1, the receiver is in the address frame filter state. In this case, the received 9th bit (S2RB8) can be used to filter the address frame. If S2RB8 = 1, the frame is the address frame, address information can enter S2BUF, S2RI becomes 1, and then address can be compared in the interrupt service routine. If S2RB8 = 0, it indicates that the frame is not an address frame and should be discarded and keep S2RI = 0. In mode 1, if the S2SM2 bit is 0 and the S2REN bit is 1, the receiver is in the address frame filter disabled state. Regardless of the received S2RB8 is 0 or 1, the information received can enter into the S2BUF, and make S2RI = 1. Here, S2RB8 is usually used as check bit. Mode 0 is non-multi-machine communication mode, where S2SM2 should be 0.

S2REN: Receive enable control bit.

0: disable serial port receive data.

1: enable serial port receive data.

S2TB8: S2TB8 is the 9th bit of datum to be sent when serial port 2 is in mode 1, which is usually used as a parity check bit or an address frame / data frame flag. It can be set or cleared by software as required. In mode 0, this bit is not used.

S2RB8: S2RB8 is the 9th bit of datum received when serial port 2 is in mode 1, which is usually used as a

parity check bit or an address frame / data frame flag. It can be set or cleared by software as required. In mode 0, this bit is not used.

S2TI: Transmit interrupt request flag of serial port 2. S2TI is set by the hardware automatically at the start of the stop bit transmission and requests interrupts to the CPU. S2TI must be cleared by software after the interrupt is serviced.

S2RI: Receive interrupt request flag of serial port 2. S2RI is set by hardware automatically at the middle of stop bit the serial port received, and requests the interrupt to the CPU. After the interrupt is serviced, S2RI must be cleared by software.

Serial port 2 data register

Symbol	Address	B7	B6	B5	B4	B3	B2	B1	B0
S2BUF	9BH								

S2BUF: It is used as the buffer in transmission and reception for serial port 2. S2BUF is actually two buffers, read buffer and write buffer. Two operations correspond to two different registers, one is write-only register (write buffer), the other is read-only register (read buffer). Actually the CPU reads serial receive buffer when reads S2BUF, and writes to the S2BUF will trigger the serial port to start sending data.

14.3.1 Serial Port 2 Mode 0

Serial port 2 mode 0 is 8-bit UART mode with variable baud rate, where a frame of information consists 10 bits: 1 start bit, 8 data bits (LSB first) and 1 stop bit. The baud rate is variable, which can be set by the software as needed. TxD2 is the data transmitting pin, and RxD2 is the data receiving pin, the serial port is a full duplex receiver/transmitter.

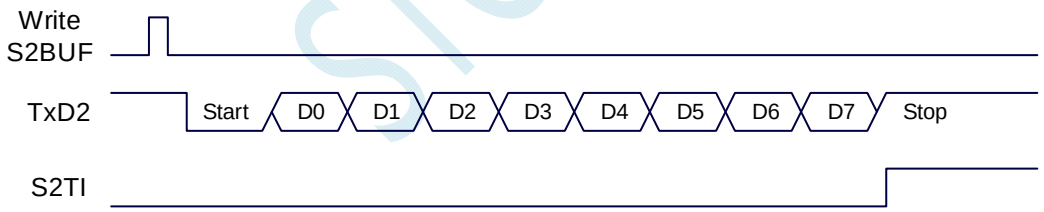

Transmitting data (Serial port 2 mode 0)

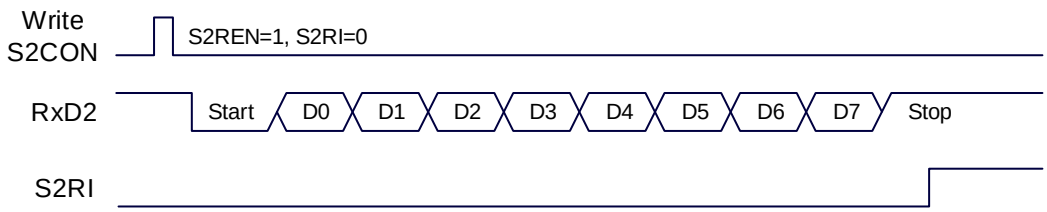

Receiving data (Serial port 2 mode 0)

The baud rate of serial port 2 is variable. It is generated by timer 2. If the timer is in 1T mode (12x speed), the corresponding baud rate is increased by 12 times.

The baud rate of serial port 2 mode 0 is calculated as follows, where SYSclk is the system operating frequency.

Timer selected	Speed of timer	Baud rate calculation formula
Timer 2	1T	$\text{reload value of timer 2} = 65536 - \frac{\text{SYSclk}}{4 \times \text{baud rate}}$
	12T	$\text{reload value of timer 2} = 65536 - \frac{\text{SYSclk}}{12 \times 4 \times \text{baud r}}$

14.3.2 Serial Port 2 Mode 1

Serial port 2 operating mode 1 is a 9-bit data UART mode with ariable baud rate. One frame information consists of 11 bits: 1 start bit, 8 data bits (LSB first), 1 programmable bit (9th bit) and 1 stop bit. The baud rate is variable, which can be set by the software as needed. TxD2 is the data transmitting pin, and RxD2 is the data receiving pin, the serial port is a full duplex receiver/transmitter.

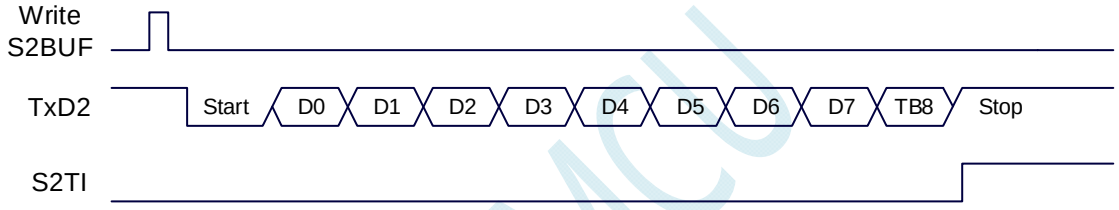

Transmitting data (Serial port 2 mode 1)

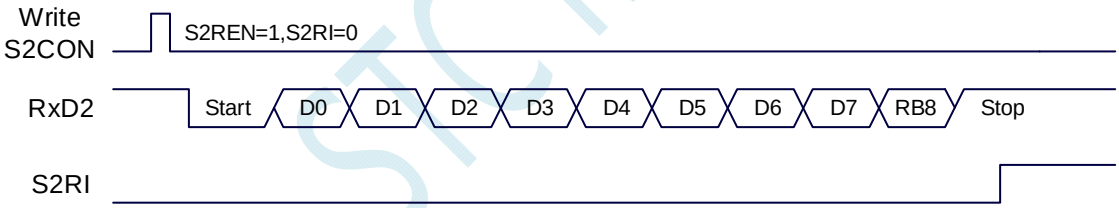

Receiving data (Serial port 2 mode 1)

The baud rate calculation formula of serial port 2 mode 1 is exactly the same as that of mode 0. Please refer to the mode 0 baud rate calculation formula.

14.4Serial Port 3

Serial port 3 control register

Symbol	Address	B7	B6	B5	B4	B3	B2	B1	B0
S3CON	ACH	S3SM0	S3ST3	S3SM2	S3REN	S3TB8	S3RB8	S3TI	S3RI

S3SM0: Serial port 3 mode select bit.

S3SM0	Serial port 3 mode	Function description
0	Mode 0	8-bit UART, whose baud-rate is variable
1	Mode 1	9-bit UART, whose baud-rate is variable

S3ST3: Serial port 3 baud rate generator select bit.

0: Select Timer 2 as the baud-rate generator of UART3.

1: Select Timer 3 as the baud-rate generator of UART3.

S3SM2: Serial port 3 multi-machine communication control enable bit. In mode 1, if the S3SM2 bit is 1 and the S3REN bit is 1, the receiver is in the address frame filter state. In this case, the received 9th bit (S3RB8) can be used to filter the address frame. If S3RB8 = 1, the frame is the address frame, address information can enter S3BUF, S3RI becomes 1, and then address can be compared in the interrupt service routine. If S3RB8 = 0, it indicates that the frame is not an address frame and should be discarded and keep S3RI = 0. In mode 1, if the S3SM2 bit is 0 and the S3REN bit is 1, the receiver is in the address frame filter disabled state. Regardless of the received S3RB8 is 0 or 1, the information received can enter into the S3BUF, and make S3RI = 1. Here, S3RB8 is usually used as check bit. Mode 0 is non-multi-machine communication mode, where S3SM2 should be 0.

S3REN: Receive enable control bit.

0: disable serial port receive data.

1: enable serial port receive data.

S3TB8: S3TB8 is the 9th bit of datum to be sent when serial port 3 is in mode 1, which is usually used as a parity check bit or an address frame / data frame flag. It can be set or cleared by software as required. In mode 0, this bit is not used.

S3RB8: S3RB8 is the 9th bit of datum received when serial port 3 is in mode 1, which is usually used as a parity check bit or an address frame / data frame flag. It can be set or cleared by software as required. In mode 0, this bit is not used.

S3TI: Transmit interrupt request flag of serial port 3. S3TI is set by the hardware automatically at the start of the stop bit transmission and requests interrupts to the CPU. S3TI must be cleared by software after the interrupt is serviced.

S3RI: Receive interrupt request flag of serial port 3. S3RI is set by hardware automatically at the middle of stop bit the serial port received, and requests the interrupt to the CPU. After the interrupt is serviced, S3RI must be cleared by software.

Serial port 3 data register

Symbol	Address	B7	B6	B5	B4	B3	B2	B1	B0
S3BUF	ADH								

S3BUF: It is used as the buffer in transmission and reception for serial port 3. S3BUF is actually two buffers, read buffer and write buffer. Two operations correspond to two different registers, one is write-only register (write buffer), the other is read-only register (read buffer). Actually the CPU reads serial receive buffer when reads S3BUF, and writes to the S3BUF will trigger the serial port to start sending data.

14.4.1 Serial Port 3 Mode 0

Serial port 3 mode 0 is 8-bit UART mode with variable baud rate, where a frame of information consists 10 bits: 1 start bit, 8 data bits (LSB first) and 1 stop bit. The baud rate is variable, which can be set by the software as needed. TxD3 is the data transmitting pin, and RxD3 is the data receiving pin, the serial port is a

full duplex receiver/transmitter.

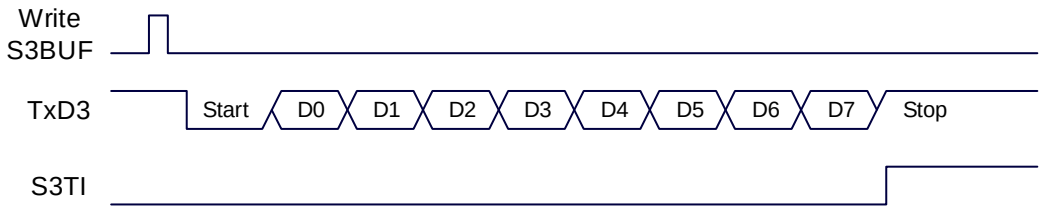

Transmitting data (Serial port 3 mode 0)

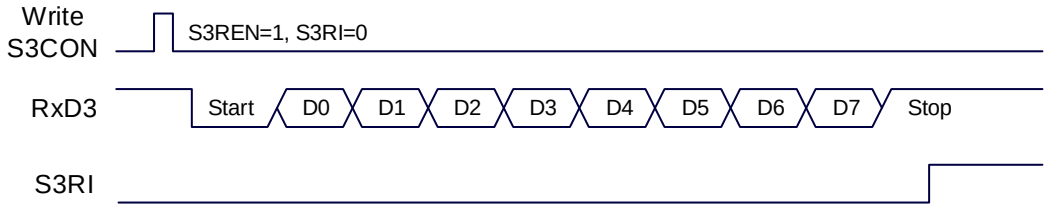

Receiving data (Serial port 3 mode 0)

The baud rate of serial port 3 is variable. It is generated by timer 2 or timer 3. If the timer is in 1T mode (12x speed), the corresponding baud rate is increased by 12 times.

The baud rate of serial port 3 mode 0 is calculated as follows, where SYSclk is the system operating frequency.

Timer selected	Speed of timer	Baud rate calculation formula
Timer 2	1T	$\text{reload value of timer 2} = 65536 - \frac{\text{SYSclk}}{4 \times \text{baud rate}}$
	12T	$\text{reload value of timer 2} = 65536 - \frac{\text{SYSclk}}{12 \times 4 \times \text{baud r}}$
Timer 3	1T	$\text{reload value of timer 3} = 65536 - \frac{\text{SYSclk}}{4 \times \text{baud rate}}$
	12T	$\text{reload value of timer 3} = 65536 - \frac{\text{SYSclk}}{12 \times 4 \times \text{baud r}}$

14.4.2 Serial Port 3 Mode 1

Serial port 3 operating mode 1 is a 9-bit data UART mode with variable baud rate. One frame information consists of 11 bits: 1 start bit, 8 data bits (LSB first), 1 programmable bit (9th bit) and 1 stop bit. The baud rate is variable, which can be set by the software as needed. TxD3 is the data transmitting pin, and RxD3 is the data receiving pin, the serial port is a full duplex receiver/transmitter.

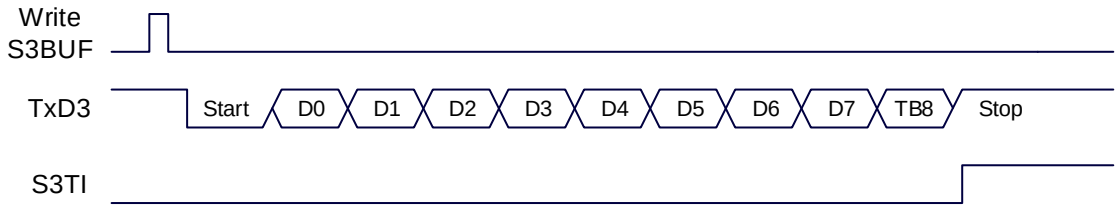

Transmitting data (Serial port 3 mode 1)

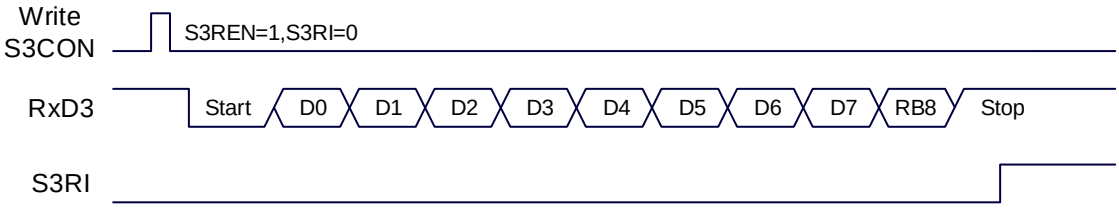

Receiving data (Serial port 1 mode 1)

The baud rate calculation formula of serial port 3 mode 1 is exactly the same as that of mode 0. Please refer to the mode 0 baud rate calculation formula.

14.5 Serial Port 4

Serial port 4 control register

Symbol	Address	B7	B6	B5	B4	B3	B2	B1	B0
S4CON	84H	S4SM0	S4ST4	S4SM2	S4REN	S4TB8	S4RB8	S4TI	S4RI

S4SM0: Serial port 4 mode select bit.

S4SM0	Serial port 4 mode	Function description
0	Mode 0	8-bit UART, whose baud-rate is variable
1	Mode 1	9-bit UART, whose baud-rate is variable

S4ST4: Serial port 4 baud rate generator select bit.

0: Select Timer 2 as the baud-rate generator of UART4.

1: Select Timer 4 as the baud-rate generator of UART4.

S4SM2: Serial port 4 multi-machine communication control enable bit. In mode 1, if the S4SM2 bit is 1 and the S4REN bit is 1, the receiver is in the address frame filter state. In this case, the received 9th bit (S4RB8) can be used to filter the address frame. If S4RB8 = 1, the frame is the address frame, address information can enter S4BUF, S4RI becomes 1, and then address can be compared in the interrupt service routine. If S4RB8 = 0, it indicates that the frame is not an address frame and should be discarded and keep S4RI = 0. In mode 1, if the S4SM2 bit is 0 and the S4REN bit is 1, the receiver is in the address frame filter disabled state. Regardless of the received S4RB8 is 0 or 1, the information received can enter into the S4BUF, and make S4RI = 1. Here, S4RB8 is usually used as check bit. Mode 0 is non-multi-machine communication mode, where S4SM2 should be 0.

S4REN: Receive enable control bit.

0: disable serial port receive data.

1: enable serial port receive data.

S4TB8: S4TB8 is the 9th bit of datum to be sent when serial port 4 is in mode 1, which is usually used as a

parity check bit or an address frame / data frame flag. It can be set or cleared by software as required. In mode 0, this bit is not used.

S4RB8: S4RB8 is the 9th bit of datum recieved when serial port 4 is in mode 1, which is usually used as a parity check bit or an address frame / data frame flag. It can be set or cleared by software as required. In mode 0, this bit is not used.

S4TI: Transmit interrupt request flag of serial port 4. S4TI is set by the hardware automatically at the start of the stop bit transmittion and requests interrupts to the CPU. S4TI must be cleared by software after the interrupt is serviced.

S4RI: Receive interrupt request flag of serial port 4. S4RI is set by hardware automatically at the middle of stop bit the serial port received, and requests the interrupt to the CPU. After the interrupt is serviced, S4RI must be cleared by software.

Serial port 4 data register

Symbol	Address	B7	B6	B5	B4	B3	B2	B1	B0
S4BUF	85H								

S4BUF: It is used as the buffer in transmission and reception for serial port 4. S4BUF is actually two buffers, read buffer and write buffer. Two operations correspond to two different registers, one is write-only register (write buffer), the other is read-only register (read buffer). Actually the CPU reads serial receive buffer when reads S4BUF, and writes to the S4BUF will trigger the serial port to start sending data.

14.5.1 Serial Port 4 Mode 0

Serial port 4 mode 0 is 8-bit UART mode with variable baud rate, where a frame of information consists 10 bits: 1 start bit, 8 data bits (LSB first) and 1 stop bit. The baud rate is variable, which can be set by the software as needed. TxD4 is the data transmitting pin, and RxD4 is the data receiving pin, the serial port is a full duplex receiver/transmitter.

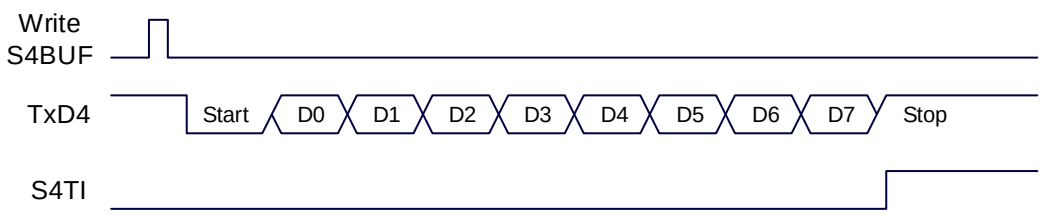

Transmitting data (Serial port 4 mode 0)

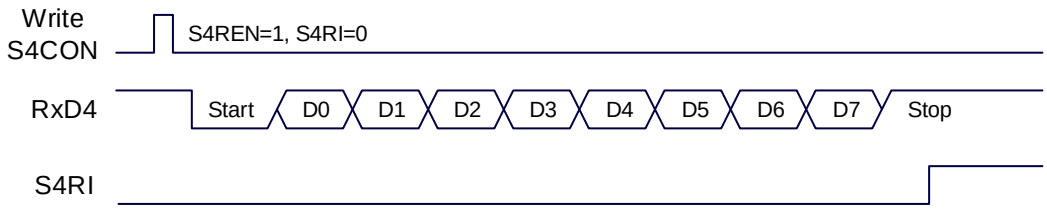

Receiving data (Serial port 4 mode 0)

The baud rate of serial port 4 is variable. It is generated by timer 2 or timer 4. If the timer is in 1T mode

(12x speed), the corresponding baud rate is increased by 12 times.

The baud rate of serial port 4 mode 0 is calculated as follows, where SYSclk is the system operating frequency.

Timer selected	Speed of timer	Baud rate calculation formula
Timer 2	1T	$\text{reload value of timer 2} = 65536 - \frac{SYSclk}{4 \times \text{baud rate}}$
	12T	$\text{reload value of timer 2} = 65536 - \frac{SYSclk}{12 \times 4 \times \text{baud r}}$
Timer 4	1T	$\text{reload value of timer 4} = 65536 - \frac{SYSclk}{4 \times \text{baud rate}}$
	12T	$\text{reload value of timer 4} = 65536 - \frac{SYSclk}{12 \times 4 \times \text{baud r}}$

14.5.2 Serial Port 4 Mode 1

Serial port 4 operating mode 1 is a 9-bit data UART mode with ariable baud rate. One frame information consists of 11 bits: 1 start bit, 8 data bits (LSB first), 1 programmable bit (9th bit) and 1 stop bit. The baud rate is variable, which can be set by the software as needed. TxD4 is the data transmitting pin, and RxD4 is the data receiving pin, the serial port is a full duplex receiver/transmitter.

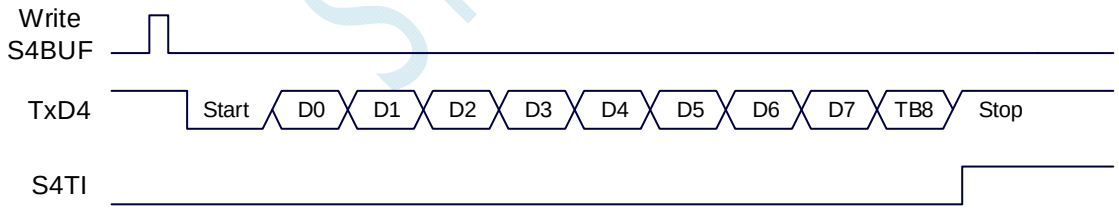

Transmitting data (Serial port 4 mode 1)

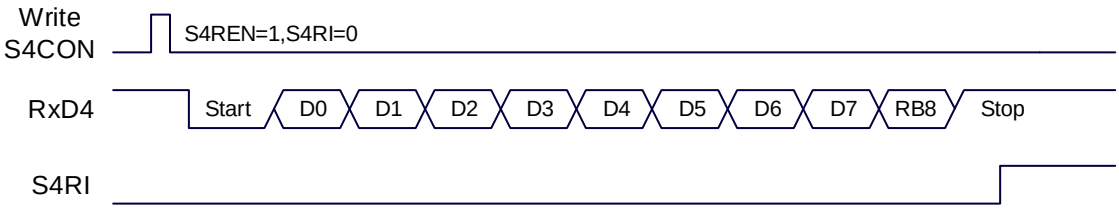

Receiving data (Serial port 4 mode 1)

The baud rate calculation formula of serial port 4 mode 1 is exactly the same as that of mode 0. Please refer to the mode 0 baud rate calculation formula.

14.6 Precautions for Serial Port

There are some precautions for serial ports about request for interrupt:

When the mode is 8 bits data,there will be a TI interrupt after send out the whole stop status.

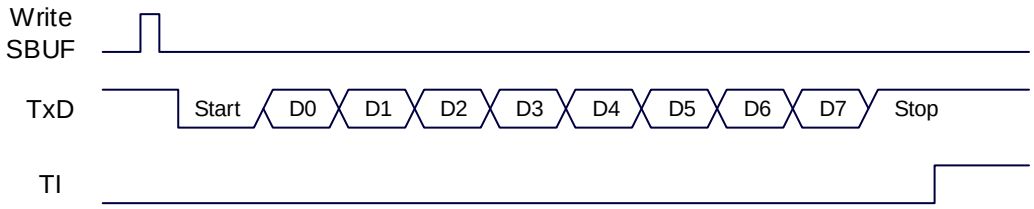

Send data

When the mode is 8 bits data,there will be a RI interrupt after receive a half of the stop bit.

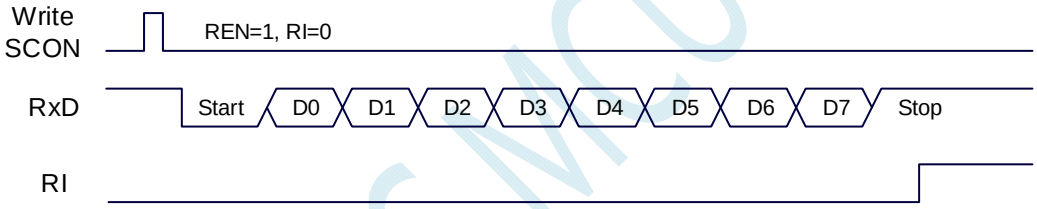

Receive data

When the mode is 9 bits data,there will be a TI interrupt after send out the whole stop status.

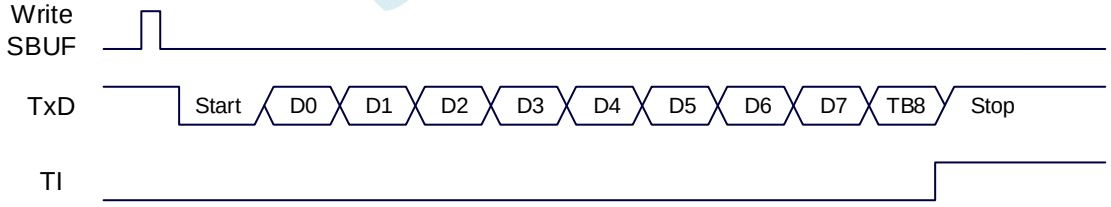

Send data

When the mode is 9 bits data,there will be a RI interrupt after receive a half of the stop bit.

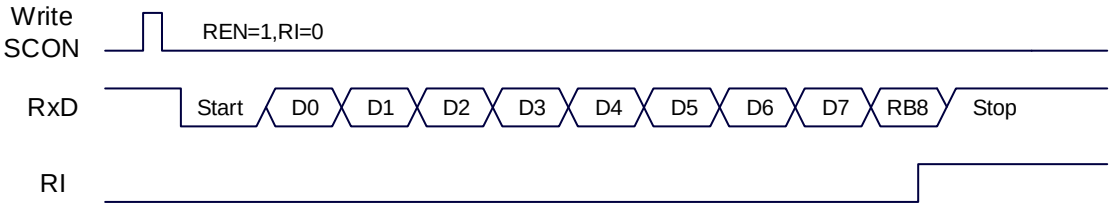

Receive data

14.7 Demo code

14.7.1 Serial port 1 use timer 2 as Baud Rate Generator

Assembly code

```
AUXR        DATA    8EH
T2H         DATA    0D6H
T2L         DATA    0D7H

BUSY        BIT     20H.0
WPTR        DATA    21H
RPTR        DATA    22H
BUFFER      DATA    23H                     ;16 bytes

            ORG     0000H
            LJMP    MAIN
            ORG     0023H
            LJMP    UART_ISR

            ORG     0100H

UART_ISR:
            PUSH    ACC
            PUSH    PSW
            MOV     PSW,#08H

            JNB     TI,CHKRI
            CLR     TI
            CLR     BUSY
CHKRI:
            JNB     RI,UARTISR_EXIT
            CLR     RI
            MOV     A,WPTR
            ANL     A,#0FH
            ADD     A,#BUFFER
            MOV     R0,A
            MOV     @R0,SBUF
            INC     WPTR
UARTISR_EXIT:
            POP     PSW
            POP     ACC
            RETI

UART_INIT:
            MOV     SCON,#50H
            MOV     T2L,#0E8H               ;65536-11059200/115200/4=0FFE8H
            MOV     T2H,#0FFH
            MOV     AUXR,#15H
            CLR     BUSY
            MOV     WPTR,#00H
            MOV     RPTR,#00H
            RET

UART_SEND:
            JB      BUSY,$
            SETB    BUSY
```

```
                MOV     SBUF,A
                RET

UART_SENDSTR:
                CLR     A
                MOVC    A,@A+DPTR
                JZ      SENDEND
                LCALL   UART_SEND
                INC     DPTR
                JMP     UART_SENDSTR
SENDEND:
                RET

MAIN:
                MOV     SP,#3FH

                LCALL   UART_INIT
                SETB    ES
                SETB    EA

                MOV     DPTR,#STRING
                LCALL   UART_SENDSTR

LOOP:
                MOV     A,RPTR
                XRL     A,WPTR
                ANL     A,#0FH
                JZ      LOOP
                MOV     A,RPTR
                ANL     A,#0FH
                ADD     A,#BUFFER
                MOV     R0,A
                MOV     A,@R0
                LCALL   UART_SEND
                INC     RPTR
                JMP     LOOP

STRING:         DB      'Uart Test !',0DH,0AH,00H

                END
```

C code

```
#include "reg51.h"
#include "intrins.h"

#define   FOSC        11059200UL
#define   BRT         (65536 - FOSC / 115200 / 4)

sfr       AUXR    =   0x8e;
sfr       T2H     =   0xd6;
sfr       T2L     =   0xd7;

bit       busy;
char      wptr;
char      rptr;
char      buffer[16];
```

```
void UartIsr() interrupt 4
{
	if (TI)
	{
		TI = 0;
		busy = 0;
	}
	if (RI)
	{
		RI = 0;
		buffer[wptr++] = SBUF;
		wptr &= 0x0f;
	}
}

void UartInit()
{
	SCON = 0x50;
	T2L = BRT;
	T2H = BRT >> 8;
	AUXR = 0x15;
	wptr = 0x00;
	rptr = 0x00;
	busy = 0;
}

void UARTsend(char dat)
{
	while (busy);
	busy = 1;
	SBUF = dat;
}

void UARTsendStr(char *p)
{
	while (*p)
	{
		UARTsend(*p++);
	}
}

void main()
{
	UartInit();
	ES = 1;
	EA = 1;
	UARTsendStr("Uart Test !\r\n");

	while (1)
	{
		if (rptr != wptr)
		{
			UARTsend(buffer[rptr++]);
			rptr &= 0x0f;
		}
	}
}
```

STC MCU

14.7.2 Serial port 1 use timer 1 as Baud Rate Generator(MODE 0)

Assembly code

```
AUXR        DATA    8EH

BUSY        BIT     20H.0
WPTR        DATA    21H
RPTR        DATA    22H
BUFFER      DATA    23H                     ;16 bytes

            ORG     0000H
            LJMP    MAIN
            ORG     0023H
            LJMP    UART_ISR

            ORG     0100H

UART_ISR:
            PUSH    ACC
            PUSH    PSW
            MOV     PSW,#08H

            JNB     TI,CHKRI
            CLR     TI
            CLR     BUSY
CHKRI:
            JNB     RI,UARTISR_EXIT
            CLR     RI
            MOV     A,WPTR
            ANL     A,#0FH
            ADD     A,#BUFFER
            MOV     R0,A
            MOV     @R0,SBUF
            INC     WPTR
UARTISR_EXIT:
            POP     PSW
            POP     ACC
            RETI

UART_INIT:
            MOV     SCON,#50H
            MOV     TMOD,#00H
            MOV     TL1,#0E8H               ;65536-11059200/115200/4=0FFE8H
            MOV     TH1,#0FFH
            SETB    TR1
            MOV     AUXR,#40H
            CLR     BUSY
            MOV     WPTR,#00H
            MOV     RPTR,#00H
            RET

UART_SEND:
            JB      BUSY,$
```

```
                SETB    BUSY
                MOV     SBUF,A
                RET

UART_SENDSTR:
                CLR     A
                MOVC    A,@A+DPTR
                JZ      SENDEND
                LCALL   UART_SEND
                INC     DPTR
                JMP     UART_SENDSTR
SENDEND:
                RET

MAIN:
                MOV     SP,#3FH

                LCALL   UART_INIT
                SETB    ES
                SETB    EA

                MOV     DPTR,#STRING
                LCALL   UART_SENDSTR

LOOP:
                MOV     A,RPTR
                XRL     A,WPTR
                ANL     A,#0FH
                JZ      LOOP
                MOV     A,RPTR
                ANL     A,#0FH
                ADD     A,#BUFFER
                MOV     R0,A
                MOV     A,@R0
                LCALL   UART_SEND
                INC     RPTR
                JMP     LOOP

STRING:         DB      'Uart Test !',0DH,0AH,00H

                END
```

C code

```
#include "reg51.h"
#include "intrins.h"

#define     FOSC        11059200UL
#define     BRT         (65536 - FOSC / 115200 / 4)

sfr         AUXR    =   0x8e;

bit         busy;
char        wptr;
char        rptr;
char        buffer[16];

void UartIsr() interrupt 4
```

```
{
        if (TI)
        {
                TI = 0;
                busy = 0;
        }
        if (RI)
        {
                RI = 0;
                buffer[wptr++] = SBUF;
                wptr &= 0x0f;
        }
}

void UartInit()
{
        SCON = 0x50;
        TMOD = 0x00;
        TL1 = BRT;
        TH1 = BRT >> 8;
        TR1 = 1;
        AUXR = 0x40;
        wptr = 0x00;
        rptr = 0x00;
        busy = 0;
}

void UARTsend(char dat)
{
        while (busy);
        busy = 1;
        SBUF = dat;
}

void UARTsendStr(char *p)
{
        while (*p)
        {
                UARTsend(*p++);
        }
}

void main()
{
        UartInit();
        ES = 1;
        EA = 1;
        UARTsendStr("Uart Test !\r\n");

        while (1)
        {
                if (rptr != wptr)
                {
                        UARTsend(buffer[rptr++]);
                        rptr &= 0x0f;
                }
        }
```

STC MCU

```
}
```

14.7.3 Serial port 1 use timer 1 as Baud Rate Generator(MODE 2)

Assembly code

```
AUXR        DATA    8EH

BUSY        BIT     20H.0
WPTR        DATA    21H
RPTR        DATA    22H
BUFFER      DATA    23H                     ;16 bytes

            ORG     0000H
            LJMP    MAIN
            ORG     0023H
            LJMP    UART_ISR

            ORG     0100H

UART_ISR:
            PUSH    ACC
            PUSH    PSW
            MOV     PSW,#08H

            JNB     TI,CHKRI
            CLR     TI
            CLR     BUSY
CHKRI:
            JNB     RI,UARTISR_EXIT
            CLR     RI
            MOV     A,WPTR
            ANL     A,#0FH
            ADD     A,#BUFFER
            MOV     R0,A
            MOV     @R0,SBUF
            INC     WPTR
UARTISR_EXIT:
            POP     PSW
            POP     ACC
            RETI

UART_INIT:
            MOV     SCON,#50H
            MOV     TMOD,#20H
            MOV     TL1,#0FDH               ;256-11059200/115200/32=0FDH
            MOV     TH1,#0FDH
            SETB    TR1
            MOV     AUXR,#40H
            CLR     BUSY
            MOV     WPTR,#00H
            MOV     RPTR,#00H
            RET
```

```
UART_SEND:
            JB      BUSY,$
            SETB    BUSY
            MOV     SBUF,A
            RET

UART_SENDSTR:
            CLR     A
            MOVC    A,@A+DPTR
            JZ      SENDEND
            LCALL   UART_SEND
            INC     DPTR
            JMP     UART_SENDSTR
SENDEND:
            RET

MAIN:
            MOV     SP,#3FH

            LCALL   UART_INIT
            SETB    ES
            SETB    EA

            MOV     DPTR,#STRING
            LCALL   UART_SENDSTR

LOOP:
            MOV     A,RPTR
            XRL     A,WPTR
            ANL     A,#0FH
            JZ      LOOP
            MOV     A,RPTR
            ANL     A,#0FH
            ADD     A,#BUFFER
            MOV     R0,A
            MOV     A,@R0
            LCALL   UART_SEND
            INC     RPTR
            JMP     LOOP

STRING:     DB      'Uart Test !',0DH,0AH,00H

            END
```

C code

```
#include "reg51.h"
#include "intrins.h"

#define   FOSC        11059200UL
#define   BRT         (256 - FOSC / 115200 / 32)

sfr       AUXR    =   0x8e;

bit       busy;
char      wptr;
char      rptr;
char      buffer[16];
```

```
void UartIsr() interrupt 4
{
    if (TI)
    {
        TI = 0;
        busy = 0;
    }
    if (RI)
    {
        RI = 0;
        buffer[wptr++] = SBUF;
        wptr &= 0x0f;
    }
}

void UartInit()
{
    SCON = 0x50;
    TMOD = 0x20;
    TL1 = BRT;
    TH1 = BRT;
    TR1 = 1;
    AUXR = 0x40;
    wptr = 0x00;
    rptr = 0x00;
    busy = 0;
}

void UARTsend(char dat)
{
    while (busy);
    busy = 1;
    SBUF = dat;
}

void UARTsendStr(char *p)
{
    while (*p)
    {
        UARTsend(*p++);
    }
}

void main()
{
    UartInit();
    ES = 1;
    EA = 1;
    UARTsendStr("Uart Test !\r\n");

    while (1)
    {
        if (rptr != wptr)
        {
            UARTsend(buffer[rptr++]);
            rptr &= 0x0f;
        }
```

STC MCU

```
    }
}
```

14.7.4 Serial port 2 use timer 2 as Baud Rate Generator

Assembly code

```
AUXR        DATA    8EH
T2H         DATA    0D6H
T2L         DATA    0D7H
S2CON       DATA    9AH
S2BUF       DATA    9BH
IE2         DATA    0AFH

BUSY        BIT     20H.0
WPTR        DATA    21H
RPTR        DATA    22H
BUFFER      DATA    23H                     ;16 bytes

            ORG     0000H
            LJMP    MAIN
            ORG     0043H
            LJMP    UART2_ISR

            ORG     0100H

UART2_ISR:
            PUSH    ACC
            PUSH    PSW
            MOV     PSW,#08H

            MOV     A,S2CON
            JNB     ACC.1,CHKRI
            ANL     S2CON,#NOT 02H
            CLR     BUSY
CHKRI:
            JNB     ACC.0,UART2ISR_EXIT
            ANL     S2CON,#NOT 01H
            MOV     A,WPTR
            ANL     A,#0FH
            ADD     A,#BUFFER
            MOV     R0,A
            MOV     @R0,S2BUF
            INC     WPTR
UART2ISR_EXIT:
            POP     PSW
            POP     ACC
            RETI

UART2_INIT:
            MOV     S2CON,#50H
            MOV     T2L,#0E8H               ;65536-11059200/115200/4=0FFE8H
            MOV     T2H,#0FFH
            MOV     AUXR,#14H
            CLR     BUSY
            MOV     WPTR,#00H
            MOV     RPTR,#00H
```

```
                RET

UART2_SEND:
                JB      BUSY,$
                SETB    BUSY
                MOV     S2BUF,A
                RET

UART2_SENDSTR:
                CLR     A
                MOVC    A,@A+DPTR
                JZ      SEND2END
                LCALL   UART2_SEND
                INC     DPTR
                JMP     UART2_SENDSTR
SEND2END:
                RET

MAIN:
                MOV     SP,#3FH

                LCALL   UART2_INIT
                MOV     IE2,#01H
                SETB    EA

                MOV     DPTR,#STRING
                LCALL   UART2_SENDSTR

LOOP:
                MOV     A,RPTR
                XRL     A,WPTR
                ANL     A,#0FH
                JZ      LOOP
                MOV     A,RPTR
                ANL     A,#0FH
                ADD     A,#BUFFER
                MOV     R0,A
                MOV     A,@R0
                LCALL   UART2_SEND
                INC     RPTR
                JMP     LOOP

STRING:         DB      'Uart Test !',0DH,0AH,00H

                END
```

C code

```
#include "reg51.h"
#include "intrins.h"

#define     FOSC        11059200UL
#define     BRT         (65536 - FOSC / 115200 / 4)

sfr         AUXR    =   0x8e;
sfr         T2H     =   0xd6;
sfr         T2L     =   0xd7;
sfr         S2CON   =   0x9a;
```

```
sfr     S2BUF     =    0x9b;
sfr     IE2       =    0xaf;

bit     busy;
char    wptr;
char    rptr;
char    buffer[16];

void Uart2Isr() interrupt 8
{
    if (S2CON & 0x02)
    {
        S2CON &= ~0x02;
        busy = 0;
    }
    if (S2CON & 0x01)
    {
        S2CON &= ~0x01;
        buffer[wptr++] = S2BUF;
        wptr &= 0x0f;
    }
}

void Uart2Init()
{
    S2CON = 0x50;
    T2L = BRT;
    T2H = BRT >> 8;
    AUXR = 0x14;
    wptr = 0x00;
    rptr = 0x00;
    busy = 0;
}

void Uart2Send(char dat)
{
    while (busy);
    busy = 1;
    S2BUF = dat;
}

void Uart2SendStr(char *p)
{
    while (*p)
    {
        Uart2Send(*p++);
    }
}

void main()
{
    Uart2Init();
    IE2 = 0x01;
    EA = 1;
    Uart2SendStr("Uart Test !\r\n");

    while (1)
    {
```

```
        if (rptr != wptr)
        {
            Uart2Send(buffer[rptr++]);
            rptr &= 0x0f;
        }
    }
}
```

14.7.5 Serial port 3 use timer 2 as Baud Rate Generator

Assembly code

```
AUXR        DATA    8EH
T2H         DATA    0D6H
T2L         DATA    0D7H
S3CON       DATA    0ACH
S3BUF       DATA    0ADH
IE2         DATA    0AFH

BUSY        BIT     20H.0
WPTR        DATA    21H
RPTR        DATA    22H
BUFFER      DATA    23H                     ;16 bytes

            ORG     0000H
            LJMP    MAIN
            ORG     008BH
            LJMP    UART3_ISR

            ORG     0100H

UART3_ISR:
            PUSH    ACC
            PUSH    PSW
            MOV     PSW,#08H

            MOV     A,S3CON
            JNB     ACC.1,CHKRI
            ANL     S3CON,#NOT 02H
            CLR     BUSY
CHKRI:
            JNB     ACC.0,UART3ISR_EXIT
            ANL     S3CON,#NOT 01H
            MOV     A,WPTR
            ANL     A,#0FH
            ADD     A,#BUFFER
            MOV     R0,A
            MOV     @R0,S3BUF
            INC     WPTR
UART3ISR_EXIT:
            POP     PSW
            POP     ACC
            RETI

UART3_INIT:
            MOV     S3CON,#10H
            MOV     T2L,#0E8H               ;65536-11059200/115200/4=0FFE8H
```

```
                MOV     T2H,#0FFH
                MOV     AUXR,#14H
                CLR     BUSY
                MOV     WPTR,#00H
                MOV     RPTR,#00H
                RET

UART3_SEND:
                JB      BUSY,$
                SETB    BUSY
                MOV     S3BUF,A
                RET

UART3_SENDSTR:
                CLR     A
                MOVC    A,@A+DPTR
                JZ      SEND3END
                LCALL   UART3_SEND
                INC     DPTR
                JMP     UART3_SENDSTR
SEND3END:
                RET

MAIN:
                MOV     SP,#3FH

                LCALL   UART3_INIT
                MOV     IE2,#08H
                SETB    EA

                MOV     DPTR,#STRING
                LCALL   UART3_SENDSTR

LOOP:
                MOV     A,RPTR
                XRL     A,WPTR
                ANL     A,#0FH
                JZ      LOOP
                MOV     A,RPTR
                ANL     A,#0FH
                ADD     A,#BUFFER
                MOV     R0,A
                MOV     A,@R0
                LCALL   UART3_SEND
                INC     RPTR
                JMP     LOOP

STRING:         DB      'Uart Test !',0DH,0AH,00H

                END
```

C code

```
#include "reg51.h"
#include "intrins.h"

#define   FOSC      11059200UL
#define   BRT       (65536 - FOSC / 115200 / 4)
```

```
sfr     AUXR    =   0x8e;
sfr     T2H     =   0xd6;
sfr     T2L     =   0xd7;
sfr     S3CON   =   0xac;
sfr     S3BUF   =   0xad;
sfr     IE2     =   0xaf;

bit     busy;
char    wptr;
char    rptr;
char    buffer[16];

void Uart3Isr() interrupt 17
{
    if (S3CON & 0x02)
    {
        S3CON &= ~0x02;
        busy = 0;
    }
    if (S3CON & 0x01)
    {
        S3CON &= ~0x01;
        buffer[wptr++] = S3BUF;
        wptr &= 0x0f;
    }
}

void Uart3Init()
{
    S3CON = 0x10;
    T2L = BRT;
    T2H = BRT >> 8;
    AUXR = 0x14;
    wptr = 0x00;
    rptr = 0x00;
    busy = 0;
}

void Uart3Send(char dat)
{
    while (busy);
    busy = 1;
    S3BUF = dat;
}

void Uart3SendStr(char *p)
{
    while (*p)
    {
        Uart3Send(*p++);
    }
}

void main()
{
    Uart3Init();
    IE2 = 0x08;
```

```
    EA = 1;
    Uart3SendStr("Uart Test !\r\n");

    while (1)
    {
        if (rptr != wptr)
        {
            Uart3Send(buffer[rptr++]);
            rptr &= 0x0f;
        }
    }
}
```

14.7.6 Serial port 3 use timer 3 as Baud Rate Generator

Assembly code

```
T4T3M       DATA    0D1H
T4H         DATA    0D2H
T4L         DATA    0D3H
T3H         DATA    0D4H
T3L         DATA    0D5H
S3CON       DATA    0ACH
S3BUF       DATA    0ADH
IE2         DATA    0AFH

BUSY        BIT     20H.0
WPTR        DATA    21H
RPTR        DATA    22H
BUFFER      DATA    23H             ;16 bytes

            ORG     0000H
            LJMP    MAIN
            ORG     008BH
            LJMP    UART3_ISR

            ORG     0100H

UART3_ISR:
            PUSH    ACC
            PUSH    PSW
            MOV     PSW,#08H

            MOV     A,S3CON
            JNB     ACC.1,CHKRI
            ANL     S3CON,#NOT 02H
            CLR     BUSY
CHKRI:
            JNB     ACC.0,UART3ISR_EXIT
            ANL     S3CON,#NOT 01H
            MOV     A,WPTR
            ANL     A,#0FH
            ADD     A,#BUFFER
            MOV     R0,A
            MOV     @R0,S3BUF
            INC     WPTR
UART3ISR_EXIT:
```

```
                POP     PSW
                POP     ACC
                RETI

UART3_INIT:
                MOV     S3CON,#50H
                MOV     T3L,#0E8H           ;65536-11059200/115200/4=0FFE8H
                MOV     T3H,#0FFH
                MOV     T4T3M,#0AH
                CLR     BUSY
                MOV     WPTR,#00H
                MOV     RPTR,#00H
                RET

UART3_SEND:
                JB      BUSY,$
                SETB    BUSY
                MOV     S3BUF,A
                RET

UART3_SENDSTR:
                CLR     A
                MOVC    A,@A+DPTR
                JZ      SEND3END
                LCALL   UART3_SEND
                INC     DPTR
                JMP     UART3_SENDSTR
SEND3END:
                RET

MAIN:
                MOV     SP,#3FH

                LCALL   UART3_INIT
                MOV     IE2,#08H
                SETB    EA

                MOV     DPTR,#STRING
                LCALL   UART3_SENDSTR

LOOP:
                MOV     A,RPTR
                XRL     A,WPTR
                ANL     A,#0FH
                JZ      LOOP
                MOV     A,RPTR
                ANL     A,#0FH
                ADD     A,#BUFFER
                MOV     R0,A
                MOV     A,@R0
                LCALL   UART3_SEND
                INC     RPTR
                JMP     LOOP

STRING:         DB      'Uart Test !',0DH,0AH,00H

                END
```

C code

```
#include "reg51.h"
#include "intrins.h"

#define     FOSC            11059200UL
#define     BRT             (65536 - FOSC / 115200 / 4)

sfr         T4T3M       =   0xd1;
sfr         T4H         =   0xd2;
sfr         T4L         =   0xd3;
sfr         T3H         =   0xd4;
sfr         T3L         =   0xd5;
sfr         S3CON       =   0xac;
sfr         S3BUF       =   0xad;
sfr         IE2         =   0xaf;

bit         busy;
char        wptr;
char        rptr;
char        buffer[16];

void Uart3Isr() interrupt 17
{
    if (S3CON & 0x02)
    {
        S3CON &= ~0x02;
        busy = 0;
    }
    if (S3CON & 0x01)
    {
        S3CON &= ~0x01;
        buffer[wptr++] = S3BUF;
        wptr &= 0x0f;
    }
}

void Uart3Init()
{
    S3CON = 0x50;
    T3L = BRT;
    T3H = BRT >> 8;
    T4T3M = 0x0a;
    wptr = 0x00;
    rptr = 0x00;
    busy = 0;
}

void Uart3Send(char dat)
{
    while (busy);
    busy = 1;
    S3BUF = dat;
}

void Uart3SendStr(char *p)
{
```

```
        while (*p)
        {
                Uart3Send(*p++);
        }
}

void main()
{
        Uart3Init();
        IE2 = 0x08;
        EA = 1;
        Uart3SendStr("Uart Test !\r\n");

        while (1)
        {
                if (rptr != wptr)
                {
                        Uart3Send(buffer[rptr++]);
                        rptr &= 0x0f;
                }
        }
}
```

14.7.7 Serial port 4 use timer 2 as Baud Rate Generator

Assembly code

```
AUXR        DATA    8EH
T2H         DATA    0D6H
T2L         DATA    0D7H
S4CON       DATA    84H
S4BUF       DATA    085H
IE2         DATA    0AFH

BUSY        BIT     20H.0
WPTR        DATA    21H
RPTR        DATA    22H
BUFFER      DATA    23H                     ;16 bytes

            ORG     0000H
            LJMP    MAIN
            ORG     0093H
            LJMP    UART4_ISR

            ORG     0100H

UART4_ISR:
            PUSH    ACC
            PUSH    PSW
            MOV     PSW,#08H

            MOV     A,S4CON
            JNB     ACC.1,CHKRI
            ANL     S4CON,#NOT 02H
            CLR     BUSY
CHKRI:
            JNB     ACC.0,UART4ISR_EXIT
```

```
            ANL     S4CON,#NOT 01H
            MOV     A,WPTR
            ANL     A,#0FH
            ADD     A,#BUFFER
            MOV     R0,A
            MOV     @R0,S4BUF
            INC     WPTR
UART4ISR_EXIT:
            POP     PSW
            POP     ACC
            RETI

UART4_INIT:
            MOV     S4CON,#10H
            MOV     T2L,#0E8H           ;65536-11059200/115200/4=0FFE8H
            MOV     T2H,#0FFH
            MOV     AUXR,#14H
            CLR     BUSY
            MOV     WPTR,#00H
            MOV     RPTR,#00H
            RET

UART4_SEND:
            JB      BUSY,$
            SETB    BUSY
            MOV     S4BUF,A
            RET

UART4_SENDSTR:
            CLR     A
            MOVC    A,@A+DPTR
            JZ      SEND4END
            LCALL   UART4_SEND
            INC     DPTR
            JMP     UART4_SENDSTR
SEND4END:
            RET

MAIN:
            MOV     SP,#3FH

            LCALL   UART4_INIT
            MOV     IE2,#10H
            SETB    EA

            MOV     DPTR,#STRING
            LCALL   UART4_SENDSTR

LOOP:
            MOV     A,RPTR
            XRL     A,WPTR
            ANL     A,#0FH
            JZ      LOOP
            MOV     A,RPTR
            ANL     A,#0FH
            ADD     A,#BUFFER
            MOV     R0,A
            MOV     A,@R0
```

```
                LCALL       UART4_SEND
                INC         RPTR
                JMP         LOOP

STRING:         DB          'Uart Test !',0DH,0AH,00H

                END
```

C code

```
#include "reg51.h"
#include "intrins.h"

#define     FOSC            11059200UL
#define     BRT             (65536 - FOSC / 115200 / 4)

sfr         AUXR        =   0x8e;
sfr         T2H         =   0xd6;
sfr         T2L         =   0xd7;
sfr         S4CON       =   0x84;
sfr         S4BUF       =   0x85;
sfr         IE2         =   0xaf;

bit         busy;
char        wptr;
char        rptr;
char        buffer[16];

void Uart4Isr() interrupt 18
{
    if (S4CON & 0x02)
    {
        S4CON &= ~0x02;
        busy = 0;
    }
    if (S4CON & 0x01)
    {
        S4CON &= ~0x01;
        buffer[wptr++] = S4BUF;
        wptr &= 0x0f;
    }
}

void Uart4Init()
{
    S4CON = 0x10;
    T2L = BRT;
    T2H = BRT >> 8;
    AUXR = 0x14;
    wptr = 0x00;
    rptr = 0x00;
    busy = 0;
}

void Uart4Send(char dat)
{
    while (busy);
    busy = 1;
```

```
        S4BUF = dat;
}

void Uart4SendStr(char *p)
{
        while (*p)
        {
                Uart4Send(*p++);
        }
}

void main()
{
        Uart4Init();
        IE2 = 0x10;
        EA = 1;
        Uart4SendStr("Uart Test !\r\n");

        while (1)
        {
                if (rptr != wptr)
                {
                        Uart4Send(buffer[rptr++]);
                        rptr &= 0x0f;
                }
        }
}
```

14.7.8 Serial port 4 use timer 4 as Baud Rate Generator

Assembly code

```
T4T3M       DATA    0D1H
T4H         DATA    0D2H
T4L         DATA    0D3H
T3H         DATA    0D4H
T3L         DATA    0D5H
S4CON       DATA    84H
S4BUF       DATA    085H
IE2         DATA    0AFH

BUSY        BIT     20H.0
WPTR        DATA    21H
RPTR        DATA    22H
BUFFER      DATA    23H                     ;16 bytes

            ORG     0000H
            LJMP    MAIN
            ORG     0093H
            LJMP    UART4_ISR

            ORG     0100H

UART4_ISR:
            PUSH    ACC
            PUSH    PSW
            MOV     PSW,#08H
```

```
            MOV     A,S4CON
            JNB     ACC.1,CHKRI
            ANL     S4CON,#NOT 02H
            CLR     BUSY
CHKRI:
            JNB     ACC.0,UART4ISR_EXIT
            ANL     S4CON,#NOT 01H
            MOV     A,WPTR
            ANL     A,#0FH
            ADD     A,#BUFFER
            MOV     R0,A
            MOV     @R0,S4BUF
            INC     WPTR
UART4ISR_EXIT:
            POP     PSW
            POP     ACC
            RETI

UART4_INIT:
            MOV     S4CON,#50H
            MOV     T4L,#0E8H           ;65536-11059200/115200/4=0FFE8H
            MOV     T4H,#0FFH
            MOV     T4T3M,#0A0H
            CLR     BUSY
            MOV     WPTR,#00H
            MOV     RPTR,#00H
            RET

UART4_SEND:
            JB      BUSY,$
            SETB    BUSY
            MOV     S4BUF,A
            RET

UART4_SENDSTR:
            CLR     A
            MOVC    A,@A+DPTR
            JZ      SEND4END
            LCALL   UART4_SEND
            INC     DPTR
            JMP     UART4_SENDSTR
SEND4END:
            RET

MAIN:
            MOV     SP,#3FH

            LCALL   UART4_INIT
            MOV     IE2,#10H
            SETB    EA

            MOV     DPTR,#STRING
            LCALL   UART4_SENDSTR

LOOP:
            MOV     A,RPTR
            XRL     A,WPTR
```

```
                ANL     A,#0FH
                JZ      LOOP
                MOV     A,RPTR
                ANL     A,#0FH
                ADD     A,#BUFFER
                MOV     R0,A
                MOV     A,@R0
                LCALL   UART4_SEND
                INC     RPTR
                JMP     LOOP

STRING:         DB      'Uart Test !',0DH,0AH,00H

                END
```

C code

```
#include "reg51.h"
#include "intrins.h"

#define   FOSC        11059200UL
#define   BRT         (65536 - FOSC / 115200 / 4)

sfr       T4T3M     =   0xd1;
sfr       T4H       =   0xd2;
sfr       T4L       =   0xd3;
sfr       T3H       =   0xd4;
sfr       T3L       =   0xd5;
sfr       S4CON     =   0x84;
sfr       S4BUF     =   0x85;
sfr       IE2       =   0xaf;

bit       busy;
char      wptr;
char      rptr;
char      buffer[16];

void Uart4Isr() interrupt 18
{
    if (S4CON & 0x02)
    {
        S4CON &= ~0x02;
        busy = 0;
    }
    if (S4CON & 0x01)
    {
        S4CON &= ~0x01;
        buffer[wptr++] = S4BUF;
        wptr &= 0x0f;
    }
}

void Uart4Init()
{
    S4CON = 0x50;
    T4L = BRT;
    T4H = BRT >> 8;
    T4T3M = 0xa0;
```

```
        wptr = 0x00;
        rptr = 0x00;
        busy = 0;
}

void Uart4Send(char dat)
{
        while (busy);
        busy = 1;
        S4BUF = dat;
}

void Uart4SendStr(char *p)
{
        while (*p)
        {
                Uart4Send(*p++);
        }
}

void main()
{
        Uart4Init();
        IE2 = 0x10;
        EA = 1;
        Uart4SendStr("Uart Test !\r\n");

        while (1)
        {
                if (rptr != wptr)
                {
                        Uart4Send(buffer[rptr++]);
                        rptr &= 0x0f;
                }
        }
}
```

STC MCU

15 Comparator,brown-out detection,internal fixed comparison voltage

STC8 series microcontroller integrates a comparator. The positive side of the comparator can be either the P3.7 port or the ADC's analog input channel, while the negative side can be P3.6 or the internal REFV voltage (internal fixed comparison voltage) after the internal BandGap passes the OP.

The comparator has two stages of programmable filter,analog filtering and digital filtering. Analog filtering can filter the glitches in the comparison input signal, and the digital filter can wait for the input signal to be more stable before comparing. The comparison result can be obtained directly by reading the internal register bits, and the comparator result can also be forwarded or inverted to the external port. Outputting the comparison result to the external port can be used as the trigger signal and feedback signal of external events, which can expand the application range of comparison.

15.1 Internal Structure of Comparator

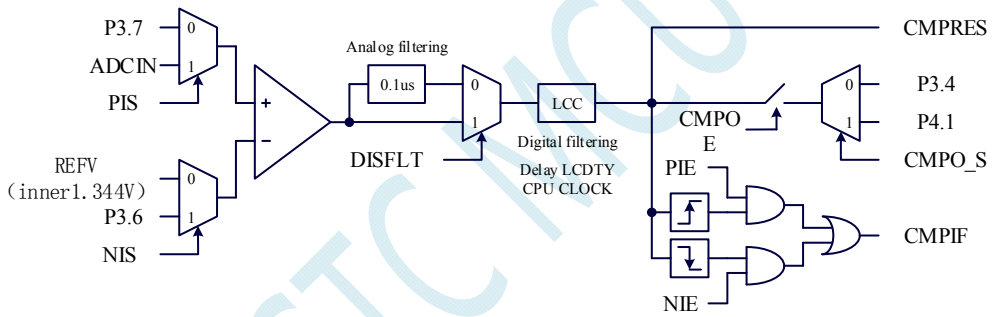

Internal structure of comparator

15.2 Registers related to comparator

symbol	description	address	Bit address and sign								Reset value
			B7	B6	B5	B4	B3	B2	B1	B0	
CMPCR1	Compare register 1	E6H	CMPEN	CMPIF	PIE	NIE	PIS	NIS	CMPOE	CMPRES	0000,0000
CMPCR2	Compare register 2	E7H	INVCMPO	DISFLT	LCDTY[5:0]						0000,0000

Compare register 1

symbol	address	B7	B6	B5	B4	B3	B2	B1	B0
CMPCR1	E6H	CMPEN	CMPIF	PIE	NIE	PIS	NIS	CMPOE	CMPRES

CMPEN：enable the module of comparator

0：close the function of comparision

1：open the function of comparision

CMPIF：symbol of comparator interruption.When PIE or NIE was enable，there will be the sign of interruption will automatically set as CMPIF 1，and request interruption to CPU.This flag should be cleared by users.

PIE：Enable the rising edge interrupt of comparator

0：Forbid the rising edge interrupt of comparator

1：Enable the rising edge interrupt of comparator

NIE：Enable the falling edge interrupt of comparator

0：Forbid the falling edge interrupt of comparator

1：Enable the falling edge interrupt of comparator

PIS：positive selection bit of comparator

0：choose external port P3.7 as positive input source of comparator

1：The analog input of the ADC is selected as the positive input source of the comparator through the ADC_CHS bit in ADC_CONTR.

NIS：Comparator negative selection bit

0：The internal bandgap voltage REFV after OP is selected as the negative input source of the comparator (REFV voltage value is 1.344V. Due to manufacturing error, the actual voltage value may be between 1.34V and 1.35V).

1：Select external port P3.6 as comparator negative input source.

CMPOE：Comparator result output control bit

0：Disable comparator output

1：Enable comparator output

CMPRES：the result of comparatorn(read only)

0：CMP+ lower than CMP-

1：CMP+higher than CMP-

CMPRES is a digitally filtered output signal, not a direct output from the comparator.

The register control the comparator

symbol	address	B7	B6	B5	B4	B3	B2	B1	B0
CMPCR2	E7H	INVCMPO	DISFLT	LCDTY[5:0]					

INVCMPO：control the result of comparator

0：Comparator result positive output.

1：Comparator result negative output

DISFLT：Analog filter control

0：Enable 0.1us analog filtering

1：Turn off 0.1us analog filtering

LCDTY[5:0]：Digital filter control

The digital filter function is a digital signal debounce function. When the comparison result has a rising edge or a falling edge, the comparator detects that the changed signal must maintain the CPU clock set by LCDTY without changing, and then considers that the data change is valid;otherwise, it will regard the signal as unchanged .

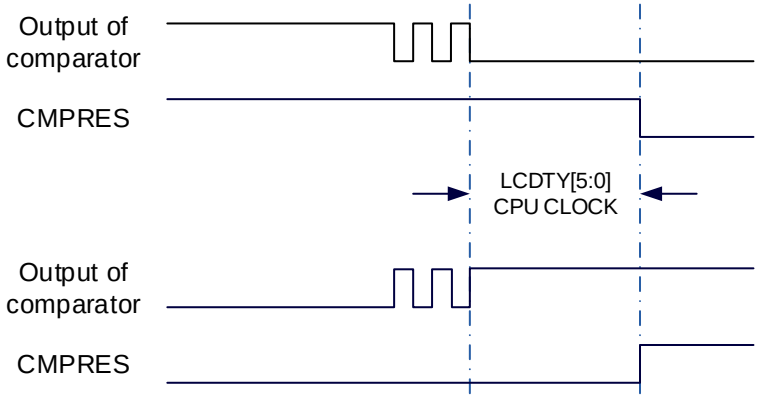

15.3 Demo code

15.3.1 Use of comparators(interrupt way)

Assembly code

```
CMPCR1      DATA    0E6H
CMPCR2      DATA    0E7H

            ORG     0000H
            LJMP    MAIN
            ORG     00ABH
            LJMP    CMPISR

            ORG     0100H
CMPISR:
            PUSH    ACC
            ANL     CMPCR1,#NOT 40H         ;clear the symbol of interrupt
            MOV     A,CMPCR1
            JB      ACC.0,RSING
FALLING:
            CPL     P1.0
            POP     ACC
            RETI
RSING:
            CPL     P1.1
            POP     ACC
            RETI

MAIN:
            MOV     SP,#3FH

            MOV     CMPCR2,#00H
            ANL     CMPCR2,#NOT 80H         ;Comparator result positive output.
;           ORL     CMPCR2,#80H             ;Comparator result negative output.
            ANL     CMPCR2,#NOT 40H         ;forbid 0.1us filtering
;           ORL     CMPCR2,#40H             ;enable 0.1us filtering
;           ANL     CMPCR2,#NOT 3FH         ;direct output the result
            ORL     CMPCR2,#10H
            MOV     CMPCR1,#00H
            ORL     CMPCR1,#30H             ;Enable comparator edge interrupt
```

```
;       ANL     CMPCR1,#NOT 20H     ;Disable comparator rising edge interrupt
;       ORL     CMPCR1,#20H         ;Enable comparator rising edge interrupt

;       ANL     CMPCR1,#NOT 10H     ;Disable comparator falling edge interrupt
;       ORL     CMPCR1,#10H         ;Enable comparator falling edge interrupt
        ANL     CMPCR1,#NOT 08H     ;P3.7 Input for CMP+
;       ORL     CMPCR1,#08H         ;ADC input pin teaches CMP+ input
;       ANL     CMPCR1,#NOT 04H     ;Internal reference voltage is CMP-input pin
        ORL     CMPCR1,#04H         ;P3.6 is the CMP-input pin
;       ANL     CMPCR1,#NOT 02H     ;Disable comparator output
        ORL     CMPCR1,#02H         ;Enable comparator output
        ORL     CMPCR1,#80H         ;Enable comparator module
        SETB    EA

        JMP     $

        END
```

C code

```
#include "reg51.h"
#include "intrins.h"

sfr     CMPCR1      =   0xe6;
sfr     CMPCR2      =   0xe7;

sbit    P10         =   P1^0;
sbit    P11         =   P1^1;

void CMP_Isr() interrupt 21
{
    CMPCR1 &= ~0x40;            //clear the symbol of interrupt
    if (CMPCR1 & 0x01)
    {
        P10 = !P10;
    }
    else
    {
        P11 = !P11;
    }
}

void main()
{
    CMPCR2 = 0x00;
    CMPCR2 &= ~0x80;            //Comparator result positive output
//  CMPCR2 |= 0x80;             //Comparator result negative output.
    CMPCR2 &= ~0x40;            //forbid 0.1us filtering
//  CMPCR2 |= 0x40;             //enable 0.1us filtering
//  CMPCR2 &= ~0x3f;            //direct output the result
    CMPCR2 |= 0x10;
    CMPCR1 = 0x00;
    CMPCR1 |= 0x30;             //Enable comparator edge interrupt
//  CMPCR1 &= ~0x20;            //Disable comparator rising edge interrupt
//  CMPCR1 |= 0x20;             //Enable comparator rising edge interrupt
//  CMPCR1 &= ~0x10;            //Disable comparator falling edge interrupt
//  CMPCR1 |= 0x10;             //Enable comparator falling edge interrupt
    CMPCR1 &= ~0x08;            //P3.7 Input for CMP+
```

```
//      CMPCR1 |= 0x08;                //ADC input pin teaches CMP+ input
//      CMPCR1 &= ~0x04;               //Internal reference voltage is CMP-input pin
        CMPCR1 |= 0x04;                //P3.6 is the CMP-input pin
//      CMPCR1 &= ~0x02;               //Disable comparator output
        CMPCR1 |= 0x02;                //Enable comparator output
        CMPCR1 |= 0x80;                //Enable comparator module

        EA = 1;

        while (1);
}
```

15.3.2 Use of comparators(search way)

Assembly code

```
CMPCR1      DATA    0E6H
CMPCR2      DATA    0E7H

            ORG     0000H
            LJMP    MAIN

            ORG     0100H
MAIN:
            MOV     SP,#3FH

            MOV     CMPCR2,#00H
            ANL     CMPCR2,#NOT 80H     ;Comparator result positive output
;           ORL     CMPCR2,#80H         ;Comparator result negative output.
            ANL     CMPCR2,#NOT 40H     ;forbid 0.1us filtering
;           ORL     CMPCR2,#40H         ;enable 0.1us filtering
;           ANL     CMPCR2,#NOT 3FH     ;direct output the result
            ORL     CMPCR2,#10H
            ORL     CMPCR1,#30H         ;Enable comparator edge interrupt
;           ANL     CMPCR1,#NOT 20H     ;Disable comparator rising edge interrupt
;           ORL     CMPCR1,#20H         ;Enable comparator rising edge interrupt
;           ANL     CMPCR1,#NOT 10H     ;Disable comparator falling edge interrupt
;           ORL     CMPCR1,#10H         ;Enable comparator falling edge interrupt
            ANL     CMPCR1,#NOT 08H     ;P3.7 Input for CMP+
;           ORL     CMPCR1,#08H         ;ADC input pin teaches CMP+ input
;           ANL     CMPCR1,#NOT 04H     ;Internal reference voltage is CMP-input pin
            ORL     CMPCR1,#04H         ;P3.6 is the CMP-input pin
;           ANL     CMPCR1,#NOT 02H     ;Disable comparator output
            ORL     CMPCR1,#02H         ;Enable comparator output
            ORL     CMPCR1,#80H         ;Enable comparator module

LOOP:
            MOV     A,CMPCR1
            MOV     C,ACC.0
            MOV     P1.0,C              ;read the result of comparator
            JMP     LOOP

            END
```

C code

```
#include "reg51.h"
```

```
#include "intrins.h"

sfr     CMPCR1      =   0xe6;
sfr     CMPCR2      =   0xe7;

sbit    P10         =   P1^0;
sbit    P11         =   P1^1;

void main()
{
        CMPCR2 = 0x00;
        CMPCR2 &= ~0x80;            //Comparator result positive output
//      CMPCR2 |= 0x80;             //Comparator result negative output.
        CMPCR2 &= ~0x40;            //forbid 0.1us filtering
//      CMPCR2 |= 0x40;             //enable 0.1us filtering
//      CMPCR2 &= ~0x3f;            //direct output the result
        CMPCR2 |= 0x10;
        CMPCR1 = 0x00;
        CMPCR1 |= 0x30;             //Enable comparator edge interrupt
//      CMPCR1 &= ~0x20;            //Disable comparator rising edge interrupt
//      CMPCR1 |= 0x20;             //Enable comparator rising edge interrupt
//      CMPCR1 &= ~0x10;            //Disable comparator falling edge interrupt
//      CMPCR1 |= 0x10;             //Enable comparator falling edge interrupt
        CMPCR1 &= ~0x08;            //P3.7 Input for CMP+
//      CMPCR1 |= 0x08;             //ADC input pin teaches CMP+ input
//      CMPCR1 &= ~0x04;            //Internal reference voltage is CMP-input pin
        CMPCR1 |= 0x04;             //P3.6 is the CMP-input pin
//      CMPCR1 &= ~0x02;            //Disable comparator output
        CMPCR1 |= 0x02;             //Enable comparator output
        CMPCR1 |= 0x80;             //Enable comparator module

        while (1)
        {
                P10 = CMPCR1 & 0x01;    //read the result of comparator
        }
}
```

15.3.3 Configure Comparator as External Brown-out Detection

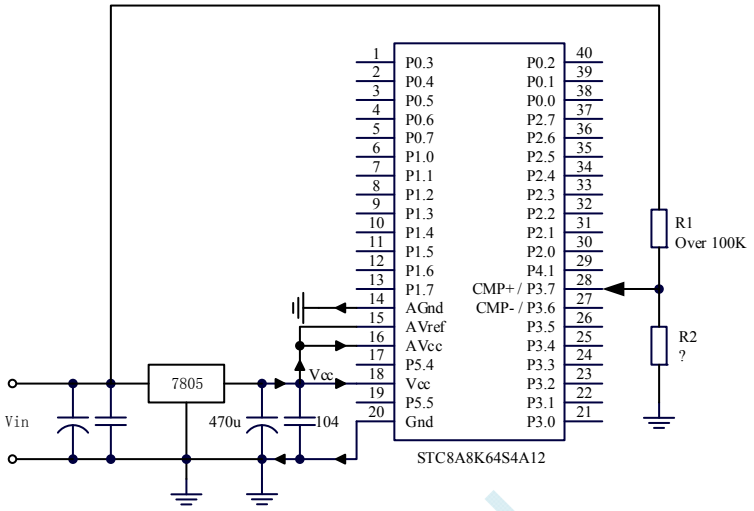

The resistors R1 and R2 in the figure above divide the voltage at the front end of the regulator block 7805. The divided voltage is compared with the external reference of the comparator CMP+ and the internal reference voltage (about 1.344V).

Generally, when the AC voltage is 220V, the DC voltage at the front end of the voltage regulator block 7805 is 11V, but when the AC voltage drops to 160V, the voltage at the front end of the voltage regulator block 7805 is 8.5V. When the direct voltage at the front end of the voltage regulator block 7805 is lower than or equal to 8.5V, the directly held voltage at the front end input is divided by the resistors R1 and R2 to the positive input terminal CMP+ of the comparator, and the input voltage at the CMP+ terminal is lower than the internal reference voltage. A comparator interrupt can be generated at this time so that there is sufficient time to save data to the EEPROM during brownout detection. When the direct voltage at the front end of the voltage regulator block 7805 is higher than 8.5V, the DC voltage input by the front end is divided by the resistors R1 and R2 to the positive input terminal CMP+ of the comparator, and the input voltage of the CMP+ terminal is higher than the internal reference voltage. The CPU can continue to work normally.

The internal reference voltage is the voltage REFV of the internal BandGap which passed the module OP. The voltage of the REFV is about 1.344V. Due to the manufacturing error, the actual voltage may be between 1.34V and 1.35V. The specific value is obtained by reading the value of the address occupied by the internal reference voltage in the internal RAM area or the ROM area. For the STC8 family, the internal reference voltages are stored in RAM and ROM as shown in the following table.

Module of microcontroller	Address which store in RAM (High byte first)	Address which store in ROM (High byte first)
STC8A8K16S4A12/STC8A4K16S4A12	0EFH-0F0H	3FF7H-3FF8H

STC8F2K16S4/STC8F2K16S2		
STC8A8K32S4A12/STC8A4K32S4A12 STC8F2K32S4/STC8F2K32S2	0EFH-0F0H	7FF7H-7FF8H
STC8A8K60S4A12/STC8A4K60S4A12 STC8F2K60S4/STC8F2K60S2	0EFH-0F0H	EFF7H-EFF8H
STC8A8K64S4A12/STC8A4K64S4A12 STC8F2K64S4/STC8F2K64S2	0EFH-0F0H	FDF7H-FDF8H

Note: If you need to read the reference voltage from the ROM, you need to check the following options during ISP download.

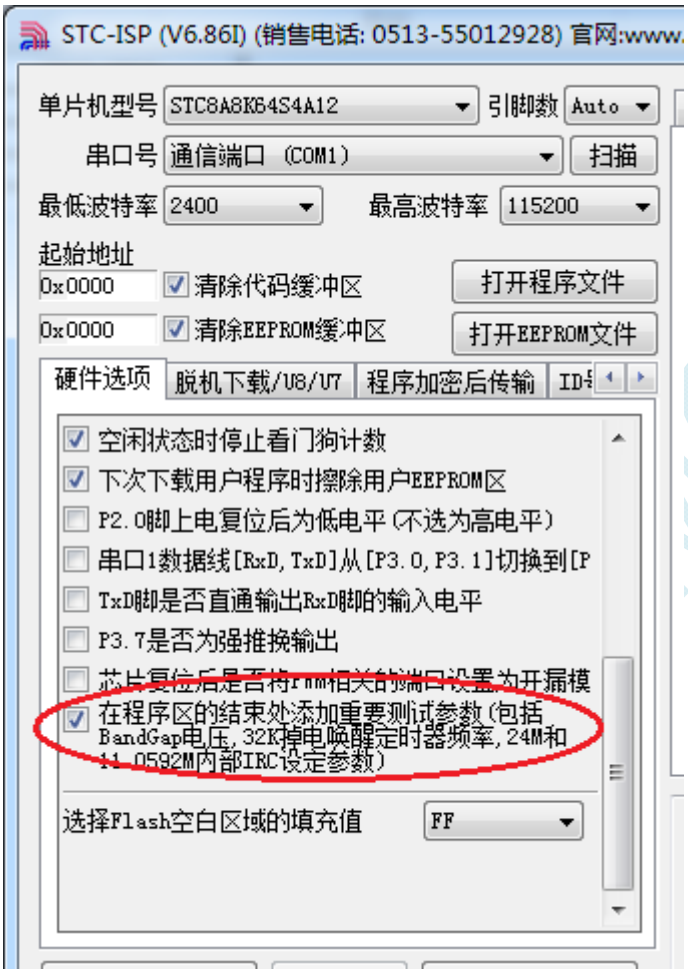

15.3.4 Comparator detects operating voltage (battery voltage)

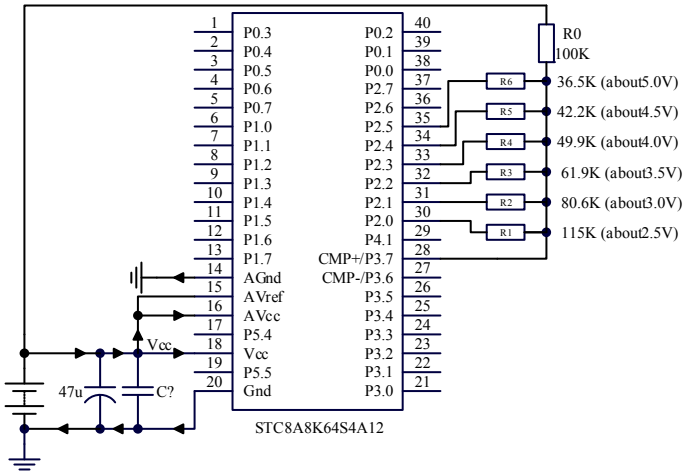

	System clock<=10MHz	System clock>10MHz
C?	104(0.1uF)	103(0.01uF)

In the figure above, the operating voltage of the MCU can be measured approximately by the principle of resistive voltage division (the gate of the strobe, the IO output of the MCU is low, the voltage of the port is close to GND, the channel that has not been selected, and the IO port of the MCU Output open-drain mode high, does not affect other channels).

The negative terminal of the comparator selects the internal reference voltage (approximately 1.344V), and the positive terminal selects the voltage value that is input to the CMP+ pin after passing through the resistor divider.

During the initialization, P2.5~P2.0 are all set to open-drain mode and output high. Firstly, P2.0 output low level, with the same time, if the VCC voltage is lower than 2.5V, the comparator's comparison value is 0, whereas, the comparator's comparison value is 1;

If it is determined that VCC is higher than 2.5V, the P2.0 output will be high and the P2.1 output will be low. At this time, if the VCC voltage is lower than 3.0V, the comparison value of the comparator is 0, whereas ,if the VCC voltage is higher than 3.0V compares the comparator to 1;

If it is determined that VCC is higher than 3V, the P2.1output will be high and the P2.2 output will be low. At this time, if the VCC voltage is lower than 3.5V, the comparison value of the comparator is 0, whereas if the VCC voltage is higher than 3.5V compares the comparator to 1;

If it is determined that VCC is higher than 3.5V, the P2.2 output will be high and the P2.3 output will be low. At this time, if the VCC voltage is lower than 4.0V, the comparison value of the comparator is 0, whereas if the VCC voltage is higher than 4.0V compares the comparator to 1;

If it is determined that VCC is higher than 4V, the P2.3output will be high and the P2.4 output will be low. At this time, if the VCC voltage is lower than 4.5 V, the comparison value of the comparator is 0, whereas if the VCC voltage is higher than 4.5 V compares the comparator to 1;

If it is determined that VCC is higher than 4.5 V, the P2.4 output will be high and the P2.5 output will be low. At this time, if the VCC voltage is lower than 5.0V, the comparison value of the comparator is 0, whereas if the VCC voltage is higher than 5.0V compares the comparator to 1;

Assembly code

```
CMPCR1      DATA    0E6H
CMPCR2      DATA    0E7H
P2M0        DATA    96H
P2M1        DATA    95H

            ORG     0000H
            LJMP    MAIN

            ORG     0100H
MAIN:
            MOV     SP,#3FH

            MOV     P2M0,#00111111B         ;P2.5~P2.0 initialized to open-drain mode
            MOV     P2M1,#00111111B
            MOV     P2,#0FFH
            MOV     CMPCR2,#10H             ;Comparator output result after 16 debounced clocks
            MOV     CMPCR1,#00H
            ANL     CMPCR1,#NOT 08H         ;P3.7 is the CMP+ input pin
            ANL     CMPCR1,#NOT 04H         ;Internal reference voltage is CMP-input pin
            ANL     CMPCR1,#NOT 02H         ;Disable comparator output

            ORL     CMPCR1,#80H             ;Enable comparator module

LOOP:
            MOV     R0,#00000000B           ;voltage<2.5V
            MOV     P2,#11111110B           ;P2.0 output 0
            CALL    DELAY
            MOV     A,CMPCR1
            JNB     ACC.0,SKIP
            MOV     R0,#00000001B           ;voltage>2.5V
            MOV     P2,#11111101B           ;P2.1 output 0
            CALL    DELAY
            MOV     A,CMPCR1
            JNB     ACC.0,SKIP
            MOV     R0,#00000011B           ;voltage>3.0V
            MOV     P2,#11111011B             P2.2 output 0
            CALL    DELAY
            MOV     A,CMPCR1
            JNB     ACC.0,SKIP
            MOV     R0,#00000111B           ;voltage>3.5V
            MOV     P2,#11110111B           ;P2.3 output 0
            CALL    DELAY
            MOV     A,CMPCR1
            JNB     ACC.0,SKIP
            MOV     R0,#00001111B           ;voltage>4.0V
            MOV     P2,#11101111B           ;P2.4 output 0
            CALL    DELAY
            MOV     A,CMPCR1
            JNB     ACC.0,SKIP
            MOV     R0,#00011111B           ;voltage>4.5V
            MOV     P2,#11011111B           ;P2.5 output 0
            CALL    DELAY
            MOV     A,CMPCR1
            JNB     ACC.0,SKIP
```

```
                MOV     R0,#00111111B           ;voltage>5.0V
SKIP:
                MOV     P2,#11111111B
                MOV     A,R0
                CPL     A
                MOV     P0,A                    ;P0.5~P0.0 port display voltage

                JMP     LOOP

DELAY:
                MOV     R0,#20
                DJNZ    R0,$
                RET

                END
```

C code

```
#include "reg51.h"
#include "intrins.h"

sfr     CMPCR1      =   0xe6;
sfr     CMPCR2      =   0xe7;

sfr     P2M0        =   0x96;
sfr     P2M1        =   0x95;

void delay ()
{
    char i;

    for (i=0; i<20; i++);
}

void main()
{
    unsigned char v;

    P2M0 = 0x3f;                    // P2.5~P2.0 initialized to open-drain mode
    P2M1 = 0x3f;
    P2 = 0xff;

    CMPCR2 = 0x10;                  //Comparator output result after 16 debounced clocks
    CMPCR1 = 0x00;
    CMPCR1 &= ~0x08;                //P3.7 is the CMP+ input pin
    CMPCR1 &= ~0x04;                //Internal reference voltage is CMP-input pin
    CMPCR1 &= ~0x02;                //Disable comparator output
    CMPCR1 |= 0x80;                 //Enable comparator module

    while (1)
    {
        v = 0x00;                   //voltage<2.5V
        P2 = 0xfe;                  //P2.0 output 0
        delay();
        if (!(CMPCR1 & 0x01)) goto ShowVol;
        v = 0x01;                   //voltage>2.5V
        P2 = 0xfd;                  //P2.1output 0
        delay();
```

```
            if (!(CMPCR1 & 0x01)) goto ShowVol;
            v = 0x03;                   //voltage>3.0V
            P2 = 0xfb;                  //P2.2 output 0
            delay();
            if (!(CMPCR1 & 0x01)) goto ShowVol;
            v = 0x07;                   //voltage>3.5V
            P2 = 0xf7;                  //P2.3 output 0
            delay();
            if (!(CMPCR1 & 0x01)) goto ShowVol;
            v = 0x0f;                   //voltage>4.0V
            P2 = 0xef;                  //P2.4 output 0
            delay();
            if (!(CMPCR1 & 0x01)) goto ShowVol;
            v = 0x1f;                   //voltage>4.5V
            P2 = 0xdf;                  //P2.5 output 0
            delay();
            if (!(CMPCR1 & 0x01)) goto ShowVol;
            v = 0x3f;                   //voltage>5.0V
ShowVol:
            P2 = 0xff;
            P0 = ~v;
        }
}
```

STC MCU

16 IAP/EEPROM

STC8F family microcontrollers have integrated a large capacity of internal EEPROM. The internal Data Flash can be used as EEPROM by using ISP / IAP technology. And it can be repeatedly erased more than 100,000 times. EEPROM can be divided into several sectors, each sector contains 512 bytes. When EEPROM is used, it is recommended that the data modified at the same time be stored in the same sector, and data modified not at the same time be stored in different sectors, and not necessarily full. Data memory is erased sector by sector.

EEPROM can be used to save some parameters which need to be modified in the application process and need be kept when power down takes place. In the user program, byte read / byte programming / sector erase can be performed to the EEPROM. When the operating voltage is low, it is recommended not to carry out EEPROM operation to avoid data loss situation.

16.1 EEPROM Related Registers

Symbol	Description	Address	Bit Address and Symbol								Value after reset
			B7	B6	B5	B4	B3	B2	B1	B0	
IAP_DATA	ISP/IAP Flash Data Register	C2H									1111,1111
IAP_ADDRH	ISP/IAP Flash Address High	C3H									0000,0000
IAP_ADDRL	ISP/IAP Flash Address Low	C4H									0000,0000
IAP_CMD	ISP/IAP Flash Command Register	C5H	-	-	-	-	-	-	CMD[1:0]		xxxx,xx00
IAP_TRIG	ISP/IAP Flash Trigger register	C6H									0000,0000
IAP_CONTR	ISP/IAP Control Register	C7H	IAPEN	SWBS	SWRST	CMD_FAIL	-	IAP_WT[2:0]			0000,x000

EEPROM data register (IAP_DATA)

Symbol	Address	B7	B6	B5	B4	B3	B2	B1	B0
IAP_DATA	C2H								

During EEPROM read operation, the EEPROM data be read after the command execution is completed is stored in the IAP_DATA register. When writing the EEPROM, the data to be written must be stored in the IAP_DATA register before the write command is sent. The erase EEPROM command is not related to the IAP_DATA register.

EEPROM address registers

Symbol	Address	B7	B6	B5	B4	B3	B2	B1	B0
IAP_ADDRH	C3H								
IAP_ADDRL	C4H								

The target address register of EEPROM read, write, erase operation. IAP_ADDRH is the high byte address, and IAP_ADDRL is the low byte of the address.

EEPROM command register (IAP_CMD)

Symbol	Address	B7	B6	B5	B4	B3	B2	B1	B0
IAP_CMD	C5H	-	-	-	-	-	-	CMD[1:0]	

CMD[1:0]: ISP/IAP operating mode selection.

00: No operation.

01: EEPROM read command. Read one byte from the destination address.

10: EEPROM write command. Write one byte from the destination address.

11: EEPROM erase command. Write one sector from the destination address.

EEPROM command trigger register

Symbol	Address	B7	B6	B5	B4	B3	B2	B1	B0
IAP_TRIG	C6H								

After setting the command register, address register, data register and control register of EEPROM read, write and erase operation, 5AH and A5H are written to the trigger register IAP_TRIG sequentially to trigger the corresponding read, write and, erase operation. The order of 5AH and A5H can not be changed. After the operation is completed, the contents of the EEPROM address registers IAP_ADDRH, IAP_ADDRL and the EEPROM command register IAP_CMD do not change. The value of the IAP_ADDRH and IAP_ADDRL registers must be updated manually if the datum of the next address needs to be operated.

Note: For every EEPROM operation, we should write 5AH to IAP_TRIG first and then A5H to take effect the corresponding command. After the trigger command has been written, the CPU should wait in IDLE state until the corresponding IAP operation completes. The CPU will return to the normal state from the IDLE state and resume executing the CPU instructions.

EEPROM control register

Symbol	Address	B7	B6	B5	B4	B3	B2	B1	B0
IAP_CONTR	C7H	IAPEN	SWBS	SWRST	CMD_FAIL	-	IAP_WT[2:0]		

IAPEN: ISP/IAP operation enable bit.

0: disable all ISP/IAP program/erase/read function.

1: Enable ISP/IAP program/erase/read function.

SWBS: Software boot selection control bit, which should be used with SWRST.

0: Execute the program from the user code area after the software reset.

1: Execute the program from the ISP memory area after the software reset.

SWRST: Software reset trigger control.

0: No operation.

1: Generate software reset.

CMD_FAIL: Command fail status bit for EEPROM operation which should be cleared by software.

0: EEPROM operation is right.

1: EEPROMoperation fails.

IAP_WT[2:0]: Waiting time selection of EEPROM operation

IAP_WT[2:0]			Read one byte (2 clocks)	Write one byte (about 55us)	Erase one sector (about 21ms)	Clock frequency
1	1	1	2 clocks	55 clocks	21012 clocks	⩾ 1MHz
1	1	0	2 clocks	110 clocks	42024 clocks	⩾ 2MHz

1	0	1	2 clocks	165 clocks	63036 clocks	≥ 3MHz
1	0	0	2 clocks	330 clocks	126072 clocks	≥ 6MHz
0	1	1	2 clocks	660 clocks	252144 clocks	≥ 12MHz
0	1	0	2 clocks	1100 clocks	420240 clocks	≥ 20MHz
0	0	1	2 clocks	1320 clocks	504288 clocks	≥ 24MHz
0	0	0	2 clocks	1760 clocks	672384 clocks	≥ 30MHz

16.2 Important Notes on EEPROM Programming and Erase Waiting Time

Table 1 (Operation Time Requirements for STC8A Series and STC8F Series EEPROM)

EEPROM operation	Shortest time	Longest time
Program	6us	7.5us
Erase	4ms	6ms

Table 2 (Time Waiting Period for Waiting Parameters for STC8A Series and STC8F Series EEPROM Operations)

IAP_WT[2:0]			Programming waiting clock	Erasing waiting clocks	Suitable frequency
1	1	1	7 clocks	5000 clocks	1MHz
1	1	0	14 clocks	10000 clocks	2MHz
1	0	1	21 clocks	15000 clocks	3MHz
1	0	0	42 clocks	30000 clocks	6MHz
0	1	1	84 clocks	60000 clocks	12MHz
0	1	0	140 clocks	100000 clocks	20MHz
0	0	1	168 clocks	120000 clocks	24MHz
0	0	0	301 clocks	215000 clocks	30MHz

The programming and erase wait times of the internal EEPROM of the STC8A series and STC8F series MCU must meet the requirements in Table I. The waiting time should not be either too short or too long.

The waiting time of the program must be between 6 us and 7.5 us. If the programming wait time is too short(less than the minimum time of 6 us), the data inside the programmed target memory unit may not be reliable (the data may not be stored for 25 years). If the waiting time is too long (more than 1.5 times the maximum time of 7.5 us), the data written may also be incorrect due to data interference. If we ensure the requests of waiting time for programming and finished the output data comparison after completion of the programming and get the correct checkout,the data will be programmed correctly.

The erase wait time must be between 4ms and 6ms, and the erase wait time is too small (less than the shortest time 4ms), then the erased target memory sector may not be erased cleanly; if the wait time is too long (greater than the maximum A long time of 1.5 times 6ms (more than 9ms) will shorten the life of the EEPROM, that is, the original erase life of 100,000 times may be shortened to 50,000 times.

The programming and erasing waiting time should be properly selected according to the recommended

frequency given in Table 2. If the working frequency is 12MHz, please set the waiting parameter to 011B according to Table 2. If the actual operating frequency of the CPU is not in Table 2, The list of recommended frequencies needs to be calculated based on the actual frequency and the actual number of waiting clocks in Table 2 to find out the waiting time parameters that satisfy the time requirements of Table 1.

For example: the operating frequency is 4MHz, if you choose to wait for the parameter is 101B, the programming time is 21/4MHz = 5.25us, the erase time is 15000/4MHz = 3.75ms, the time is obviously not enough, so you should choose to wait for the parameter is 100B, then programming The time is 42/4MHz = 10.5us, the erase time is 30000/4MHz = 7.5ms, and the time is between the shortest time and 1.5 times the longest time.

Note: The clock that the EEPROM waits for operation refers to the system clock after the main clock is divided, which means the actual working clock of the CPU. If the microcontroller uses an internal high-precision IRC, the EEPROM is waiting for the operating clock to use the ISP download software download frequency after adjustment; if the microcontroller uses an external crystal, the EEPROM waits for the operation of the external crystal frequency through the CLKDIV register points After the clock (for example, if the microcontroller uses an external crystal and the frequency of the external crystal is 24MHz and the value of the CLKDIV register is set to 4, the clock frequency of the EEPROM waiting for the operation is 24MHz/4 = 6MHz. At this time, the waiting parameter should be 100B. , but can't choose 001B).

16.3 Demo code

16.3.1 Basic operation for EEPROM

assembly code

```
;Test operating frequency is 11.0592 MHz

IAP_DATA    DATA    0C2H
IAP_ADDRH   DATA    0C3H
IAP_ADDRL   DATA    0C4H
IAP_CMD     DATA    0C5H
IAP_TRIG    DATA    0C6H
IAP_CONTR   DATA    0C7H

WT_30M      EQU     80H
WT_24M      EQU     81H
WT_20M      EQU     82H
WT_12M      EQU     83H
WT_6M       EQU     84H
WT_3M       EQU     85H
WT_2M       EQU     86H
WT_1M       EQU     87H

            ORG     0000H
            LJMP    MAIN

            ORG     0100H

IAP_IDLE:
            MOV     IAP_CONTR,#0        ;Turn off IAP function
            MOV     IAP_CMD,#0          ;Clear command register
            MOV     IAP_TRIG,#0         ;Clear trigger register
```

```
            MOV     IAP_ADDRH,#80H      ;Set address to area where   not belong to IAP
            MOV     IAP_ADDRL,#0
            RET

IAP_READ:
            MOV     IAP_CONTR,#WT_12M   ;enable IAP
            MOV     IAP_CMD,#1          ;Set IAP read command
            MOV     IAP_ADDRL,DPL       ;Set IAP low address
            MOV     IAP_ADDRH,DPH       ;Set IAP high address
            MOV     IAP_TRIG,#5AH       ;Write trigger command(0x5a)
            MOV     IAP_TRIG,#0A5H      ;Write trigger command(0xa5)
            NOP
            MOV     A,IAP_DATA          ;Read IAP data
            LCALL   IAP_IDLE            ;Turn off IAP function
            RET

IAP_PROGRAM:
            MOV     IAP_CONTR,#WT_12M   ;enable IAP
            MOV     IAP_CMD,#2          ;Set IAP read command
            MOV     IAP_ADDRL,DPL       ;Set IAP low address
            MOV     IAP_ADDRH,DPH       ;Set IAP high address
            MOV     IAP_DATA,A          ;Write IAP data
            MOV     IAP_TRIG,#5AH       ;Write trigger command(0x5a)
            MOV     IAP_TRIG,#0A5H      ;Write trigger command(0xa5)
            NOP
            LCALL   IAP_IDLE            ;Turn off IAP function
            RET

IAP_ERASE:
            MOV     IAP_CONTR,#WT_12M   ;enable IAP
            MOV     IAP_CMD,#3          ;Set IAP wipe command
            MOV     IAP_ADDRL,DPL       ;Set IAP low address
            MOV     IAP_ADDRH,DPH       ;Set IAP high address
            MOV     IAP_TRIG,#5AH       ;Write trigger command(0x5a)
            MOV     IAP_TRIG,#0A5H      ;Write trigger command(0xa5)
            NOP
            LCALL   IAP_IDLE            ;Turn off IAP function
            RET

MAIN:
            MOV     SP,#3FH

            MOV     DPTR,#0400H
            LCALL   IAP_ERASE
            MOV     DPTR,#0400H
            LCALL   IAP_READ
            MOV     P0,A                ;P0=0FFH
            MOV     DPTR,#0400H
            MOV     A,#12H
            LCALL   IAP_PROGRAM
            MOV     DPTR,#0400H
            LCALL   IAP_READ
            MOV     P1,A                ;P1=12H

            SJMP    $

            END
```

C code

```
#include "reg51.h"
#include "intrins.h"

sfr     IAP_DATA    =   0xC2;
sfr     IAP_ADDRH   =   0xC3;
sfr     IAP_ADDRL   =   0xC4;
sfr     IAP_CMD     =   0xC5;
sfr     IAP_TRIG    =   0xC6;
sfr     IAP_CONTR   =   0xC7;

#define WT_30M      0x80
#define WT_24M      0x81
#define WT_20M      0x82
#define WT_12M      0x83
#define WT_6M       0x84
#define WT_3M       0x85
#define WT_2M       0x86
#define WT_1M       0x87

void IapIdle()
{
        IAP_CONTR = 0;          //Turn off IAP function
        IAP_CMD = 0;            //Clear command register
        IAP_TRIG = 0;           //Clear trigger register
        IAP_ADDRH = 0x80;       //Set address to area where   not belong to IAP
        IAP_ADDRL = 0;
}

char IapRead(int addr)
{
        char dat;

        IAP_CONTR = WT_12M;     //enable IAP
        IAP_CMD = 1;            //Set IAP read command
        IAP_ADDRL = addr;       //Set IAP low address
        IAP_ADDRH = addr >> 8;  //Set IAP high address
        IAP_TRIG = 0x5a;        //Write trigger command(0x5a)
        IAP_TRIG = 0xa5;        //Write trigger command(0xa5)
        _nop_();
        dat = IAP_DATA;         //read   IAP data
        IapIdle();              //Turn off IAP function

        return dat;
}

void IapProgram(int addr, char dat)
{
        IAP_CONTR = WT_12M;     //enable IAP
        IAP_CMD = 2;            //Set IAP wipe command
        IAP_ADDRL = addr;       //Set IAP low address
        IAP_ADDRH = addr >> 8;  //Set IAP high address
        IAP_DATA = dat;         //Write IAP data
        IAP_TRIG = 0x5a;        ///Write trigger command(0x5a)
        IAP_TRIG = 0xa5;        ///Write trigger command(0xa5)
        _nop_();
```

```
        IapIdle();                  //Turn off IAP function
}

void IapErase(int addr)
{
        IAP_CONTR = WT_12M;         //enable IAP
        IAP_CMD = 3;                //Set IAP wipe command
        IAP_ADDRL = addr;           //Set IAP low address
        IAP_ADDRH = addr >> 8;      //Set IAP high address
        IAP_TRIG = 0x5a;            //Write trigger command(0x5a)
        IAP_TRIG = 0xa5;            //Write trigger command(0xa5)
        _nop_();                    //
        IapIdle();                  //Turn off IAP function
}

void main()
{
        IapErase(0x0400);
        P0 = IapRead(0x0400);       //P0=0xff
        IapProgram(0x0400, 0x12);
        P1 = IapRead(0x0400);       //P1=0x12

        while (1);
}
```

16.3.2 Using the Serial Port to Send EEPROM Data

assembly code

```
AUXR        DATA    8EH
T2H         DATA    0D6H
T2L         DATA    0D7H

IAP_DATA    DATA    0C2H
IAP_ADDRH   DATA    0C3H
IAP_ADDRL   DATA    0C4H
IAP_CMD     DATA    0C5H
IAP_TRIG    DATA    0C6H
IAP_CONTR   DATA    0C7H

WT_30M      EQU     80H
WT_24M      EQU     81H
WT_20M      EQU     82H
WT_12M      EQU     83H
WT_6M       EQU     84H
WT_3M       EQU     85H
WT_2M       EQU     86H
WT_1M       EQU     87H

            ORG     0000H
            LJMP    MAIN

            ORG     0100H

UART_INIT:
            MOV     SCON,#5AH
            MOV     T2L,#0E8H           ;65536-11059200/115200/4=0FFE8H
```

```
            MOV     T2H,#0FFH
            MOV     AUXR,#15H
            RET

UART_SEND:
            JNB     TI,$
            CLR     TI
            MOV     SBUF,A
            RET

IAP_IDLE:
            MOV     IAP_CONTR,#0        ;Turn off IAP function
            MOV     IAP_CMD,#0          ;Clear command register
            MOV     IAP_TRIG,#0         ;Clear trigger register
            MOV     IAP_ADDRH,#80H      ;Set address to area where not belong to IAP
            MOV     IAP_ADDRL,#0
            RET

IAP_READ:
            MOV     IAP_CONTR,#WT_12M   ;enable IAP
            MOV     IAP_CMD,#1          ;Set IAP read command
            MOV     IAP_ADDRL,DPL       ;Set IAP low address
            MOV     IAP_ADDRH,DPH       ;Set IAP high address
            MOV     IAP_TRIG,#5AH       ;Write trigger command(0x5a)
            MOV     IAP_TRIG,#0A5H      ;Write trigger command(0xa5)
            NOP
            MOV     A,IAP_DATA          ;read   IAP data
            LCALL   IAP_IDLE            ;Turn off IAP function
            RET

IAP_PROGRAM:
            MOV     IAP_CONTR,#WT_12M   ;enable IAP
            MOV     IAP_CMD,#2          ;Set IAP write command
            MOV     IAP_ADDRL,DPL       ;Set IAP low address
            MOV     IAP_ADDRH,DPH       ;Set IAP high address
            MOV     IAP_DATA,A          ;Write IAP data
            MOV     IAP_TRIG,#5AH       ;Write trigger command(0x5a)
            MOV     IAP_TRIG,#0A5H      ;Write trigger command(0xa5)
            NOP
            LCALL   IAP_IDLE            ;Turn off IAP function
            RET

IAP_ERASE:
            MOV     IAP_CONTR,#WT_12M   ;enable IAP
            MOV     IAP_CMD,#3          ;Clear command register
            MOV     IAP_ADDRL,DPL       ;Set IAP low address
            MOV     IAP_ADDRH,DPH       ;Set IAP high address
            MOV     IAP_TRIG,#5AH       ;Write trigger command(0x5a)
            MOV     IAP_TRIG,#0A5H      ;Write trigger command(0xa5)
            NOP
            LCALL   IAP_IDLE            ;Turn off IAP function
            RET

MAIN:
            MOV     SP,#3FH

            LCALL   UART_INIT
            MOV     DPTR,#0400H
```

```
        LCALL   IAP_ERASE
        MOV     DPTR,#0400H
        LCALL   IAP_READ
        LCALL   UART_SEND
        MOV     DPTR,#0400H
        MOV     A,#12H
        LCALL   IAP_PROGRAM
        MOV     DPTR,#0400H
        LCALL   IAP_READ
        LCALL   UART_SEND

        SJMP    $

        END
```

C code

```
#include "reg51.h"
#include "intrins.h"

#define   FOSC        11059200UL
#define   BRT         (65536 - FOSC / 115200 / 4)

sfr       AUXR      =   0x8e;
sfr       T2H       =   0xd6;
sfr       T2L       =   0xd7;

sfr       IAP_DATA  =   0xC2;
sfr       IAP_ADDRH =   0xC3;
sfr       IAP_ADDRL =   0xC4;
sfr       IAP_CMD   =   0xC5;
sfr       IAP_TRIG  =   0xC6;
sfr       IAP_CONTR =   0xC7;

#define   WT_30M    0x80
#define   WT_24M    0x81
#define   WT_20M    0x82
#define   WT_12M    0x83
#define   WT_6M     0x84
#define   WT_3M     0x85
#define   WT_2M     0x86
#define   WT_1M     0x87

void UartInit()
{
        SCON = 0x5a;
        T2L = BRT;
        T2H = BRT >> 8;
        AUXR = 0x15;
}

void UARTsend(char dat)
{
        while (!TI);
        TI = 0;
        SBUF = dat;
}
```

```
void IapIdle()
{
        IAP_CONTR = 0;          //Turn off IAP function
        IAP_CMD = 0;            //Clear command register
        IAP_TRIG = 0;           //Clear trigger register
        IAP_ADDRH = 0x80;       //Set address to area where not belong to IAP
        IAP_ADDRL = 0;
}

char IapRead(int addr)
{
        char dat;

        IAP_CONTR = WT_12M;     //enable IAP
        IAP_CMD = 1;            //Set IAP read command
        IAP_ADDRL = addr;       //Set IAP low address
        IAP_ADDRH = addr >> 8;  //Set IAP high address
        IAP_TRIG = 0x5a;        //Write trigger command(0x5a)
        IAP_TRIG = 0xa5;        //Write trigger command(0xa5)
        _nop_();
        dat = IAP_DATA;         //read    IAP data
        IapIdle();              //Turn off IAP function

        return dat;
}

void IapProgram(int addr, char dat)
{
        IAP_CONTR = WT_12M;     //enable IAP
        IAP_CMD = 2;            //Set IAP write command
        IAP_ADDRL = addr;       //Set IAP low address
        IAP_ADDRH = addr >> 8;  //Set IAP high address
        IAP_DATA = dat;
        IAP_TRIG = 0x5a;        //Write trigger command(0x5a)
        IAP_TRIG = 0xa5;        //Write trigger command(0xa5)
        _nop_();
        IapIdle();              //Turn off IAP function}
void IapErase(int addr)
{
        IAP_CONTR = WT_12M;     //enable IAP
        IAP_CMD = 3;            //Clear command register
        IAP_ADDRL = addr;       //Set IAP low address
        IAP_ADDRH = addr >> 8;  //Set IAP high address
        IAP_TRIG = 0x5a;        //Write trigger command(0x5a)
        IAP_TRIG = 0xa5;        //Write trigger command(0xa5)
        _nop_();                //
        IapIdle();              //Turn off IAP function
}
void main()
{
        UartInit();
        IapErase(0x0400);
        UARTsend(IapRead(0x0400));
        IapProgram(0x0400, 0x12);
        UARTsend(IapRead(0x0400));
        while (1);
}
```

17 Analog to Digital Converter (ADC)

STC8F family of microcontrollers integrated a 15-channel 12-bit high-speed Analog to Digital Converter. (**the 16th channel can only be used to detect the internal REFV reference voltage, the voltage value of which is 1.344V, due to manufacturing error, the actual voltage value may be between 1.34V~1.35V**)。The system frequency is divided by 2 and then divided again by the user-set division ratio as the clock frequency of the ADC. The range of ADC clock frequency is SYSclk/2/1 ~ SYSclk/2/16. An A/D conversion can complete every fixed 16 ADC clocks. **The speed of ADC can be up to 800Ks (that is, 800000 analog-to-digital conversions per second).**

There are two data formats for ADC conversion results: Align left and Align right. It is convenient for user program to read and reference.

17.1 ADC Related Registers

Symbol	Description	Address	Bit Address and Symbol								Value after reset
			B7	B6	B5	B4	B3	B2	B1	B0	
ADC_CONTR	ADC control register	BCH	ADC_POWER	ADC_START	ADC_FLAG	-	ADC_CHS[3:0]				000x,0000
ADC_RES	ADC result high register	BDH									0000,0000
ADC_RESL	ADC result low register	BEH									0000,0000
ADCCFG	ADC configuration register	DEH	-	-	RESFMT	-	SPEED[3:0]				xx0x,0000

ADC control register

Symbol	Address	B7	B6	B5	B4	B3	B2	B1	B0
ADC_CONTR	BCH	ADC_POWER	ADC_START	ADC_FLAG	-	ADC_CHS[3:0]			

ADC_POWER：ADC power control bit

0：Turn off the power of ADC

1：Turn on the power of ADC。

It is recommended to turn the ADC off before entering Idle mode and Power-down mode to reduce the power consumption.

ADC_START：ADC start bit. ADC conversion will start after write 1 to this bit. It will automatically cleared by the hardware after A/D conversion completes。

0：No effect. Writing 0 to this bit will not stop the A/D conversion if the ADC has already started.

1：Start the A/D conversion. It will automatically cleared by the hardware after A/D conversion completes.

ADC_FLAG：ADC conversion completement flag. It will be set by the hardware after the ADC conversion hasfinished, and requests interrupt to CPU. It should be cleared by software.

ADC_CHS[3:0]：ADC anolog channel selection bits.

ADC_CHS[3:0]	ADC channel	ADC_CHS[3:0]	ADC channel

0000	P1.0	1000	P0.0
0001	P1.1	1001	P0.1
0010	P1.2	1010	P0.2
0011	P1.3	1011	P0.3
0100	P1.4	1100	P0.4
0101	P1.5	1101	P0.5
0110	P1.6	1110	P0.6
0111	P1.7	1111	Test interior 1.344V REFV voltage

ADC configure register

Symbol	Address	B7	B6	B5	B4	B3	B2	B1	B0
ADCCFG	DEH	-	-	RESFMT	-	SPEED[3:0]			

RESFMT：ADC conversion result format control bit.

0：The conversion result aligns left. ADC_RES is used to save the upper 8 bits of the result and ADC_RESL is used to save the lower 4 bits of the result. The format is as follows:

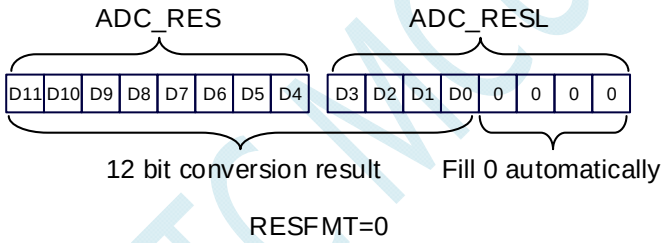

1： The conversion result aligns right. ADC_RES is used to save the upper 4 bits of the result and ADC_RESL is used to save the lower 8 bits of the result. The format is as follows:

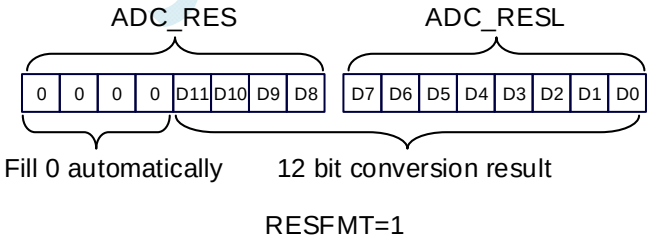

SPEED[3:0]：ADC clock control bits(F_{ADC}＝SYSclk/2/16/SPEED)

SPEED[3:0]	ADC conversion time (number of CPUclocks)	SPEED[3:0]	ADC conversion time (number of CPUclocks)
0000	32	1000	288
0001	64	1001	320
0010	96	1010	352
0011	128	1011	384
0100	160	1100	416
0101	192	1101	448
0110	224	1110	480

0111	256	1111	512

ADC conversion result registers

Symbol	Address	B7	B6	B5	B4	B3	B2	B1	B0
ADC_RES	BDH								
ADC_RESL	BEH								

When the A/D conversion is completed, the 12-bit conversion result is automatically saved to ADC_RES and ADC_RESL. Please refer to the RESFMT setting in the ADC_CFG register to see the result's data format.

17.2 ADC Typical application circuit diagram

17.2.1 High precision ADC application

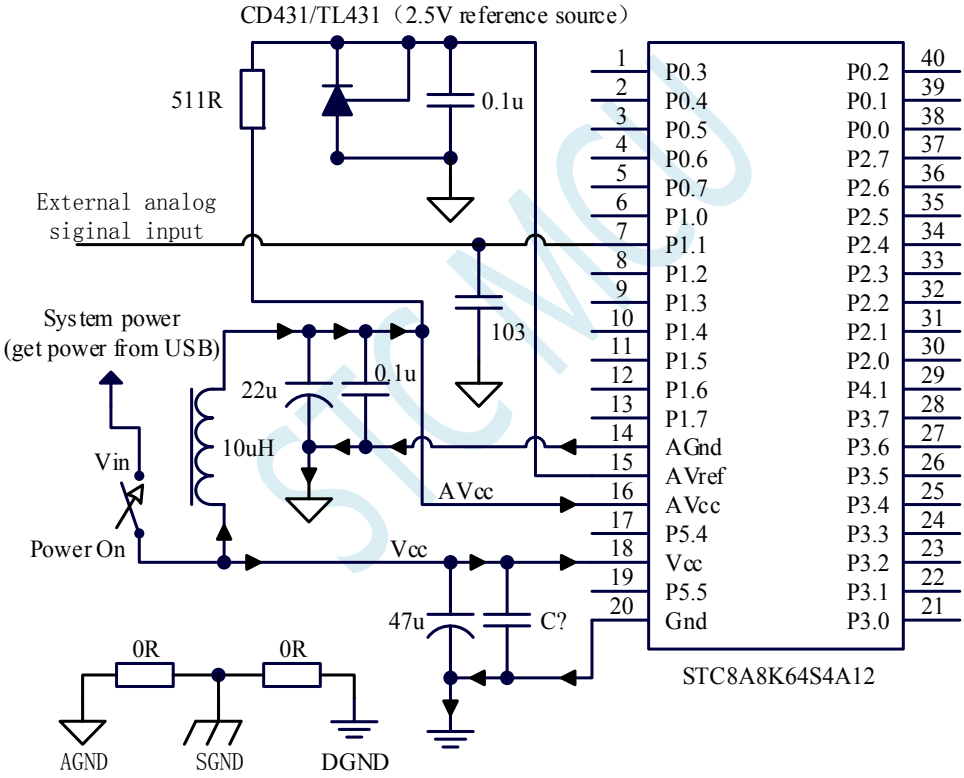

	System clock<=10MHz	System clock>10MHz
C?	104(0.1uF)	103(0.01uF)

17.2.2 ADC General Application (Applications with Low Accuracy ADC Requirements)

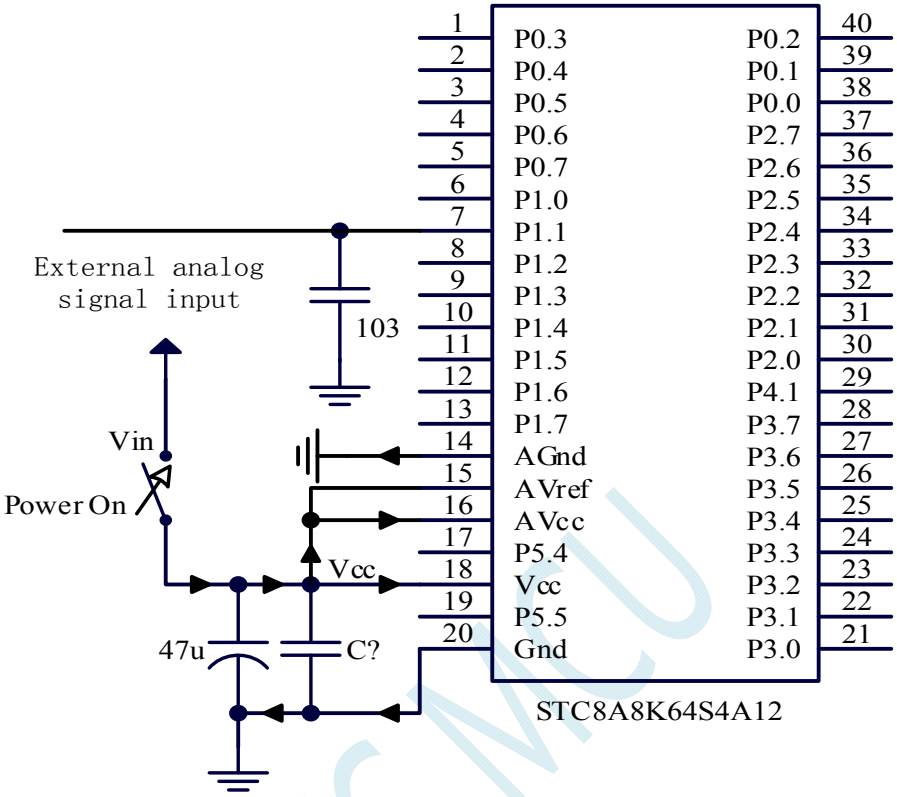

	System clock<=10MHz	System clock>10MHz
C?	104(0.1uF)	103(0.01uF)

17.3 Sample program

17.3.1 ADC basic operation (Query Mode)

Assembly code

```
;The test operating frequency is 11.0592 MHz

ADC_CONTR   DATA    0BCH
ADC_RES     DATA    0BDH
ADC_RESL    DATA    0BEH
ADCCFG      DATA    0DEH

P1M0        DATA    092H
P1M1        DATA    091H

            ORG     0000H
            LJMP    MAIN
```

```
                ORG     0100H
MAIN:
                MOV     SP,#3FH

                MOV     P1M0,#00H           ;Set P1.0 as ADC port
                MOV     P1M1,#01H
                MOV     ADCCFG,#0FH         ;Set the ADC clock as the system clock / 2 / 16 / 16 / 16
                MOV     ADC_CONTR,#80H      ;Enable ADC module
LOOP:
                ORL     ADC_CONTR,#40H      ;Start AD conversion
                NOP
                NOP
                MOV     A,ADC_CONTR         ;Query ADC Completement Flag
                JNB     ACC.5,$-2
                ANL     ADC_CONTR,#NOT 20H  ;Clear Completement Flag
                MOV     P2,ADC_RES          ;Read ADC results

                SJMP    LOOP

                END
```

C code

```
#include "reg51.h"
#include "intrins.h"

//The test operating frequency is 11.0592 MHz

sfr     ADC_CONTR   =   0xbc;
sfr     ADC_RES     =   0xbd;
sfr     ADC_RESL    =   0xbe;
sfr     ADCCFG      =   0xde;

sfr     P1M0        =   0x92;
sfr     P1M1        =   0x91;

void main()
{
    P1M0 = 0x00;                    //Set P1.0 as ADC port
    P1M1 = 0x01;
    ADCCFG = 0x0f;                  //Set the ADC clock as the system clock / 2 / 16 / 16 / 16
    ADC_CONTR = 0x80;               //Enable ADC module

    while (1)
    {
        ADC_CONTR |= 0x40;          //Start AD conversion
        _nop_();
        _nop_();
        while (!(ADC_CONTR & 0x20)); //Query ADC Completement Flag
        ADC_CONTR &= ~0x20;         //Clear Completement Flag
        P2 = ADC_RES;               //Read ADC results
    }
}
```

17.3.2 ADC basic operation(Interrupt Mode)

Assembly code

```
;The test operating frequency is 11.0592 MHz

ADC_CONTR   DATA    0BCH
ADC_RES     DATA    0BDH
ADC_RESL    DATA    0BEH
ADCCFG      DATA    0DEH

EADC        BIT     IE.5

P1M0        DATA    092H
P1M1        DATA    091H

            ORG     0000H
            LJMP    MAIN
            ORG     002BH
            LJMP    ADCISR

            ORG     0100H
ADCISR:
            ANL     ADC_CONTR,#NOT 20H      ;Clear Completement Flag
            MOV     P2,ADC_RES              ;Read ADC results
            ORL     ADC_CONTR,#40H          ;Continue AD conversion
            RETI

MAIN:
            MOV     SP,#3FH

            MOV     P1M0,#00H               ;Set P1.0 as ADC port
            MOV     P1M1,#01H
            MOV     ADCCFG,#0FH             ;Set the ADC clock as the system clock / 2 / 16 / 16 / 16
            MOV     ADC_CONTR,#80H          ;Enable ADC module
            SETB    EADC                    ;Enable ADC Interrupt
            SETB    EA
            ORL     ADC_CONTR,#40H          ;Start AD conversion

            SJMP    $

            END
```

C code

```
#include "reg51.h"
#include "intrins.h"

//The test operating frequency is 11.0592 MHz

sfr     ADC_CONTR   =   0xbc;
sfr     ADC_RES     =   0xbd;
sfr     ADC_RESL    =   0xbe;
sfr     ADCCFG      =   0xde;

sbit    EADC        =   IE^5;
```

```
sfr     P1M0    =   0x92;
sfr     P1M1    =   0x91;

void ADC_Isr() interrupt 5
{
    ADC_CONTR &= ~0x20;         //Clear Interrupt Flag
    P2 = ADC_RES;               //Read ADC results
    ADC_CONTR |= 0x40;          //Continue AD conversion
}

void main()
{
    P1M0 = 0x00;                //Set P1.0 as ADC port
    P1M1 = 0x01;
    ADCCFG = 0x0f;              //Set the ADC clock as the system clock / 2 / 16 / 16 / 16
    ADC_CONTR = 0x80;           //Enable ADC module
    EADC = 1;                   //Enable ADC Interrupt
    EA = 1;
    ADC_CONTR |= 0x40;          //Start AD conversion

    while (1);
}
```

17.3.3 Format the ADC conversion result

Assembly code

```
;The test operating frequency is 11.0592 MHz

ADC_CONTR   DATA    0BCH
ADC_RES     DATA    0BDH
ADC_RESL    DATA    0BEH
ADCCFG      DATA    0DEH

P1M0        DATA    092H
P1M1        DATA    091H

            ORG     0000H
            LJMP    MAIN

            ORG     0100H
MAIN:
            MOV     SP,#3FH

            MOV     P1M0,#00H           ;Set P1.0 as ADC port
            MOV     P1M1,#01H
            MOV     ADCCFG,#0FH         ;Set the ADC clock as the system clock / 2 / 16 / 16 / 16
            MOV     ADC_CONTR,#80H      ;Enable ADC module

            ORL     ADC_CONTR,#40H      ;Start AD conversion
            NOP
            NOP
            MOV     A,ADC_CONTR         ;Query ADC Completement Flag
            JNB     ACC.5,$-2
            ANL     ADC_CONTR,#NOT 20H  ;Clear Completement Flag

            MOV     ADCCFG,#00H         ;Set the results Align left
```

```
                MOV     A,ADC_RES           ;A stores the 12-bit results of the ADC at    higher 8 bits
                MOV     B,ADC_RESL          ;B[7:4] stores the 12-bit results of the ADC at lower
                                            ;4bits, B[3:0] is 0

;               MOV     ADCCFG,#20H         ;Set the results Align right
;               MOV     A,ADC_RES           ;A[3:0]stores the 12-bit results of the ADC at higher 4
                                                ;bits,A[7:4] is 0
;               MOV     B,ADC_RESL          ;B stores the 12-bit results of the ADC at lower 8 bits

                SJMP    $

                END
```

C code

```
#include "reg51.h"
#include "intrins.h"

//The test operating frequency is 11.0592 MHz

sfr     ADC_CONTR   =   0xbc;
sfr     ADC_RES     =   0xbd;
sfr     ADC_RESL    =   0xbe;
sfr     ADCCFG      =   0xde;

sfr     P1M0        =   0x92;
sfr     P1M1        =   0x91;

void main()
{
    P1M0 = 0x00;                    //Set P1.0 as ADC port
    P1M1 = 0x01;
    ADCCFG = 0x0f;                  //Set the ADC clock as the system clock / 2 / 16 / 16 / 16
    ADC_CONTR = 0x80;               //Enable ADC module
    ADC_CONTR |= 0x40;              //Start AD conversion
    _nop_();
    _nop_();
    while (!(ADC_CONTR & 0x20));    //Query ADC Completement Flag
    ADC_CONTR &= ~0x20;             //Clear Completement Flag

    ADCCFG = 0x00;                  //Set the results Align left
    ACC = ADC_RES;                  //A stores the 12-bit results of the ADC at    higher 8 bits
    B = ADC_RESL;                   //B[7:4] stores the 12-bit results of the ADC at lower 4bits, B[3:0] is 0

//  ADCCFG = 0x20;                  //Set the results Align right
//  ACC = ADC_RES;                  //A[3:0]stores the 12-bit results of the ADC at higher 4 bits,A[7:4] is 0
//  B = ADC_RESL;                   //B stores the 12-bit results of the ADC at lower 8 bits

    while (1);
}
```

17.3.4 Using ADC Channel 16 to Measure External Voltage or Battery Voltage

The 16th channel of STC8 series ADC is used to test the internal reference voltage of BandGap, due to the internal BandGap reference voltage is very stable, about 1.35V, and does not change with the working voltage of the chip, so it can be measured by the internal reference voltage of BandGap, then the ADC value can deduce the external voltage or the external battery voltage.

The following figure is a reference circuit diagram :

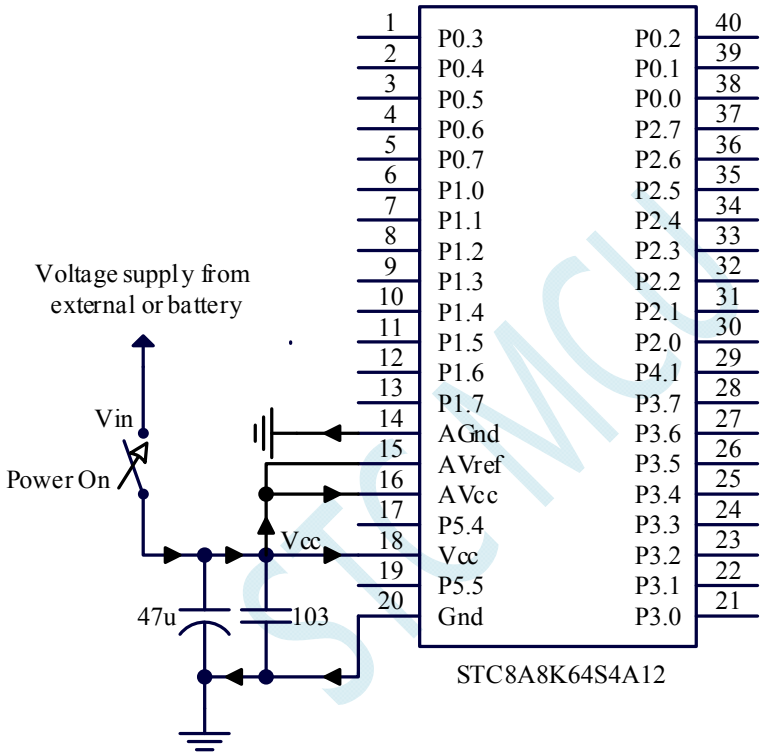

C code

```
#include "reg51.h"
#include "intrins.h"

//The test operating frequency is 11.0592 MHz

#define    FOSC        11059200UL
#define    BRT         (65536 - FOSC / 115200 / 4)

sfr        AUXR        =    0x8e;

sfr        ADC_CONTR   =    0xbc;
sfr        ADC_RES     =    0xbd;
sfr        ADC_RESL    =    0xbe;
```

```
sfr     ADCCFG      =   0xde;

sfr     P1M0        =   0x92;
sfr     P1M1        =   0x91;

int     *BGV;                   //Internal Bandgap voltage values are stored in idata
                                //Idata EFH address is used to store high byte
                                //Idata F0H address is used to store the low byte
                                //The voltage is in millivolts(mV)
bit     busy;

void UartIsr() interrupt 4
{
    if (TI)
    {
        TI = 0;
        busy = 0;
    }
    if (RI)
    {
        RI = 0;
    }
}

void UartInit()
{
    SCON = 0x50;
    TMOD = 0x00;
    TL1 = BRT;
    TH1 = BRT >> 8;
    TR1 = 1;
    AUXR = 0x40;
    busy = 0;
}

void UARTsend(char dat)
{
    while (busy);
    busy = 1;
    SBUF = dat;
}

void ADCInit()
{
    ADCCFG = 0x2f;              //Set the ADC clock as the system clock / 2 / 16 / 16 / 16
    ADC_CONTR = 0x8f;           //Enable ADC module,and select Channel 16.
}

int ADCRead()
{
    int res;

    ADC_CONTR |= 0x40;          //Start AD conversion
    _nop_();
    _nop_();
    while (!(ADC_CONTR & 0x20));    //Query ADC Completement Flag
    ADC_CONTR &= ~0x20;         // Clear Completement Flag
    res = (ADC_RES << 8) | ADC_RESL;    //Read ADC results
```

```
    return res;
}

void main()
{
    int res;
    int vcc;
    int i;

    BGV = (int idata *)0xfe;
    ADCInit();                          //ADC initialization
    UartInit();                         //UART initialization

    ES = 1;
    EA = 1;

    ADCRead();
    ADCRead();                          //Discard the first two data
    res = 0;
    for (i=0; i<8; i++)
    {
        res += ADCRead();               //Read 8 times data
    }
    res >>= 3;                          //get average value

    vcc = (int)(4095L * *BGV / res);    //Calculate the VREF pin voltage, that is, the battery voltage
                                        //The voltage is in millivolts(mV)
    UARTsend(vcc >> 8);                 //Output voltage to serial port
    UARTsend(vcc);

    while (1);
}
```

18 Application of PCA/CCP/PWM application

The STC8F family of microcontrollers integrate four groups of programmable counter array (PCA / CCP/PWM) modules, which can be used for software timer, external pulse capture, high-speed pulse output and pulse width modulation (PWM) output.

PCA contains a special 16-bit counter, with which four groups of PCA modules are connected. The structure of PCA counter is as follows:

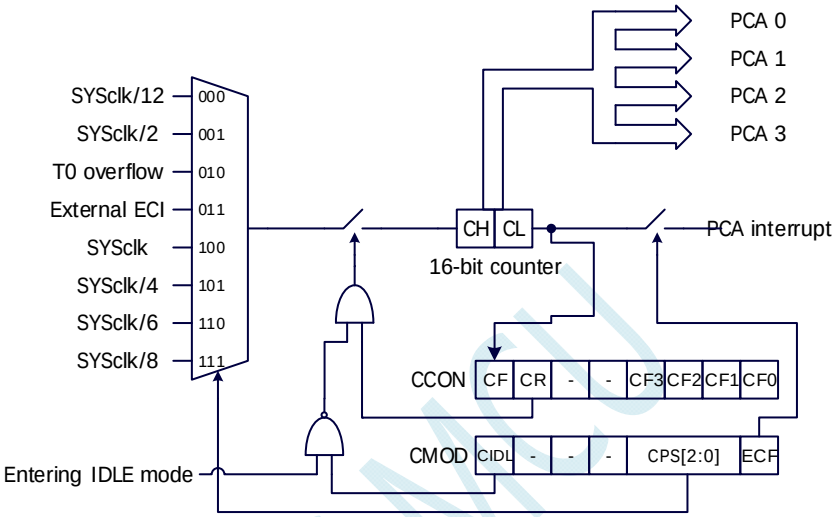

Structure of PCA counter

18.1 PCA Related register

Symbol	description	Address	Bit Address and Symbol								Value
			B7	B6	B5	B4	B3	B2	B1	B0	after reset
CCON	PCA Control Register	D8H	CF	CR	-	-	CCF3	CCF2	CCF1	CCF0	00xx,0000
CMOD	PCA Mode Register	D9H	CIDL	-	-	-	CPS[2:0]			ECF	0xxx,0000
CCAPM0	PCA 0 Mode Register	DAH	-	ECOM0	CCAPP0	CCAPN0	MAT0	TOG0	PWM0	ECCF0	x000,0000
CCAPM1	PCA 1 Mode Register	DBH	-	ECOM1	CCAPP1	CCAPN1	MAT1	TOG1	PWM1	ECCF1	x000,0000
CCAPM2	PCA 2 Mode Register	DCH	-	ECOM2	CCAPP2	CCAPN2	MAT2	TOG2	PWM2	ECCF2	x000,0000
CCAPM3	PCA 3 Mode Register	DDH	-	ECOM3	CCAPP3	CCAPN3	MAT3	TOG3	PWM3	ECCF3	x000,0000
CL	PCA Base Timer Low	E9H									0000,0000
CCAP0L	PCA 0 capture register low	EAH									0000,0000
CCAP1L	PCA 1 capture register low	EBH									0000,0000
CCAP2L	PCA 2 capture register low	ECH									0000,0000
CCAP3L	PCA 3 capture register low	EDH									0000,0000
PCA_PWM0	PCA0 PWM Mode Register	F2H	EBS0[1:0]		XCCAP0H[1:0]		XCCAP0L[1:0]		EPC0H	EPC0L	0000,0000
PCA_PWM1	PCA1 PWM Mode Register	F3H	EBS1[1:0]		XCCAP1H[1:0]		XCCAP1L[1:0]		EPC1H	EPC1L	0000,0000
PCA_PWM2	PCA2 PWM Mode Register	F4H	EBS2[1:0]		XCCAP2H[1:0]		XCCAP2L[1:0]		EPC2H	EPC2L	0000,0000
PCA_PWM3	PCA3 PWM Mode Register	F5H	EBS3[1:0]		XCCAP3H[1:0]		XCCAP3L[1:0]		EPC3H	EPC3L	0000,0000

CH	PCA Base Timer High	F9H		0000,0000
CCAP0H	PCA 0 capture register high	FAH		0000,0000
CCAP1H	PCA 1 capture register high	FBH		0000,0000
CCAP2H	PCA 2 capture register high	FCH		0000,0000
CCAP3H	PCA 3 capture register high	FDH		0000,0000

PCA control register

Symbol	Address	B7	B6	B5	B4	B3	B2	B1	B0
CCON	D8H	CF	CR	-	-	CCF3	CCF2	CCF1	CCF0

CF: PCA Counter overflow flag. It is set by hardware when the 16-bit counter of PCA overflows, and requests interrupt to CPU. It must be cleared by software.

CR: PCA counter enable bit.

0: Stop PCA counting.

1: Start PCA counting.

CCFn(n=0,1,2,3): PCA module interrupt flag. When a match or a capture occurs on the PCA module, the corresponding flag bit is set by the hardware automatically and requests an interrupt to CPU. These flags should be cleared by software.

PCA mode register

Symbol	Address	B7	B6	B5	B4	B3	B2	B1	B0
CMOD	D9H	CIDL	-	-	-	CPS[2:0]			ECF

CIDL: PCA Counter control bit in Idle mode.

0: the PCA counter will continue counting in idle mode.

1: the PCA counter will stop counting in idle mode.

CPS[2:0]: PCA Counter pulse source select bits.

CPS[2:0]	Input clock source of PCA
000	System clock/12
001	System clock/2
010	Overflow pulse of timer 0
011	External clock input from ECI pin
100	System clock
101	System clock/4
110	System clock/6
111	System clock/8

ECF: PCA counter overflow interrupt enable bit

0: disable PCA counter overflow interrupt

1: enable PCA counter overflow interrupt

PCA counter registers

Symbol	Symbol	B7	B6	B5	B4	B3	B2	B1	B0
CL	E9H								

CH	F9H	

The 16-bit counter is the combination of CL and CH, where CL is the low 8-bit counter and CH is the high 8-bit counter. The 16-bit counter of PCA increments automatically every one PCA clock.

PCA Mode Control Register

Symbol	Address	B7	B6	B5	B4	B3	B2	B1	B0
CCAPM0	DAH	-	ECOM0	CCAPP0	CCAPN0	MAT0	TOG0	PWM0	ECCF0
CCAPM1	DBH	-	ECOM1	CCAPP1	CCAPN1	MAT1	TOG1	PWM1	ECCF1
CCAPM2	DCH	-	ECOM2	CCAPP2	CCAPN2	MAT2	TOG2	PWM2	ECCF2
CCAPM3	DDH	-	ECOM3	CCAPP3	CCAPN3	MAT3	TOG3	PWM3	ECCF3

ECOMn: PCAn Comparator enable bit
CCAPPn: PCA n Capture on rising edge enable bit
CCAPNn: PCA n Capture on falling edge enable bit
MATn: PCAn match function enable bit
TOGn: PCA n high speed pulse output function enable bit
PWMn: PCAn PWM function enable bit
ECCFn: PCAn match/capture interrupt enable bit

PCA capture value/compare value registers

Symbol	Address	B7	B6	B5	B4	B3	B2	B1	B0
CCAP0L	EAH								
CCAP1L	EBH								
CCAP2L	ECH								
CCAP3L	EDH								
CCAP0H	FAH								
CCAP1H	FBH								
CCAP2H	FCH								
CCAP3H	FDH								

When the PCA capture function is enabled, CCAPnL and CCAPnH are used to save the count value (CL and CH) of the PCA at the time of capture. When the PCA comparison function is enabled, the PCA controller compares the current value in [CH,CL] and the value in [CCAPnH, CCAPnL], and the comparison result is given. When the PCA match function is enabled, the PCA controller compares the current value in [CH, CL] with the value stored in [CCAPnH, CCAPnL], and checks if they match (equal), then gives a match result.

PCA PWM Mode Registers

Symbol	Address	B7	B6	B5	B4	B3	B2	B1	B0
PCA_PWM0	F2H	EBS0[1:0]		XCCAP0H[1:0]		XCCAP0L[1:0]		EPC0H	EPC0L
PCA_PWM1	F3H	EBS1[1:0]		XCCAP1H[1:0]		XCCAP1L[1:0]		EPC1H	EPC1L
PCA_PWM2	F4H	EBS2[1:0]		XCCAP2H[1:0]		XCCAP2L[1:0]		EPC2H	EPC2L
PCA_PWM3	F5H	EBS3[1:0]		XCCAP3H[1:0]		XCCAP3L[1:0]		EPC3H	EPC3L

EBSn[1:0]：PCAn PWM number of bits control

EBSn[1:0]	PWM bits	Reload value	Comparison value

00	8-bit PWM	{EPCnH, CCAPnH[7:0]}	{EPCnL, CCAPnL[7:0]}
01	7-bit PWM	{EPCnH, CCAPnH[6:0]}	{EPCnL, CCAPnL[6:0]}
10	6-bit PWM	{EPCnH, CCAPnH[5:0]}	{EPCnL, CCAPnL[5:0]}
11	10-bit PWM	{EPCnH, XCCAPnH[1:0], CCAPnH[7:0]}	{EPCnL, XCCAPnL[1:0], CCAPnL[7:0]}

XCCAPnH[1:0]: The 9th bit and 10th bit of reload value of 10-bit PWM

XCCAPnL[1:0]: The 9th bit and 10th bit of comparison value of 10-bit PWM

EPCnH: The MSB of reload vaule in PWM mode (i.e. the 9th bit of 8-bit PWM, the 8th bit of 7-bit PWM, the 7th bit of 6-bit PWM, the 11th bit of 10-bit PWM)

EPCnL: The MSB of comparison vaule in PWM mode (i.e. the 9th bit of 8-bit PWM, the 8th bit of 7-bit PWM, the 7th bit of 6-bit PWM, the 11th bit of 10-bit PWM)

Note: When updating the reload value of 10-bit PWM, write the upper two bits of XCCAPnH [1: 0] firstly and then the lower 8 bits of CCAPnH [7: 0].

18.2 PCA Operation Mode

There are 4 groups of PCA modules in STC8F family microcontrollers, and operation mode of each module can be set independently. The mode settings are as follows:

CCAPMn								Function of module
-	ECOMn	CAPPn	CAPNn	MATn	TOGn	PWMn	ECCFn	
-	0	0	0	0	0	0	0	No operation
-	1	0	0	0	0	1	0	6/7/8/10 bit PWM mode, no interrupt
-	1	1	0	0	0	1	1	6/7/8/10 bit PWM mode, rising edge interrupt
-	1	0	1	0	0	1	1	6/7/8/10 bit PWM mode, falling edge interrupt
-	1	1	1	0	0	1	1	6/7/8/10 bit PWM mode, rising and falling edge interrup
-	0	1	0	0	0	0	x	16 bit rising edge capture mode
-	0	0	1	0	0	0	x	16 bit falling edge capture mode
-	0	1	1	0	0	0	x	16 bit rising and falling edge capture mode
-	1	0	0	1	0	0	x	16 bit software timer mode
-	1	0	0	1	1	0	x	16 bit high speed pulse output mode

18.2.1 Capture Mode

At least one of CAPNn and CAPPn in CCAPMn must be set (or all them are set) for a PCA module to operate in capture mode. When a PCA module is operating in capture mode, the input hoppings on the external CCP0 / CCP1 / CCP2 / CCP3 pins of the module are sampled. When a valid hopping is sampled, the PCA controller immediately loads the counter values in the PCA counters, CH and CL, into the module's capture registers, CCAPnL and CCAPnH, and sets the corresponding CCFn in the CCON register. If the ECCFn bit in CCAPMn is set to 1, an interrupt will be generated. Since all PCA module's interrupt entry addresses are shared, it is necessary to determine which module generated an interrupt in the interrupt service routine and

note that the interrupt flag bit must be cleared by software.

The structure of the PCA module working in capture mode is shown in the following figure:

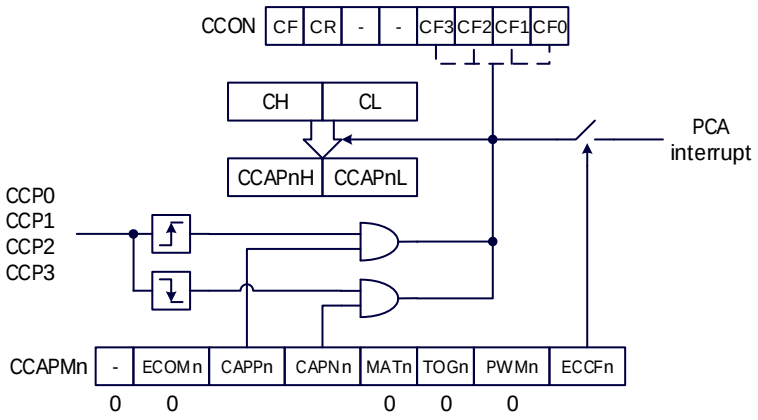

PCA capture mode

18.2.2 Software Timer Mode

The PCA module can be used as a software timer by setting the ECOM and MAT bits in the CCAPMn register. The PCA counter values in CL and CH are compared with the capture registers values in CCAPnL and CCAPnH. When they are equal, CCFn in CCON is set and an interrupt is generated if ECCFn in CCAPMn is set to 1. CCFn flag bit should be cleared by software.

The structure of PCA module working in software timer mode is shown in the following figure:

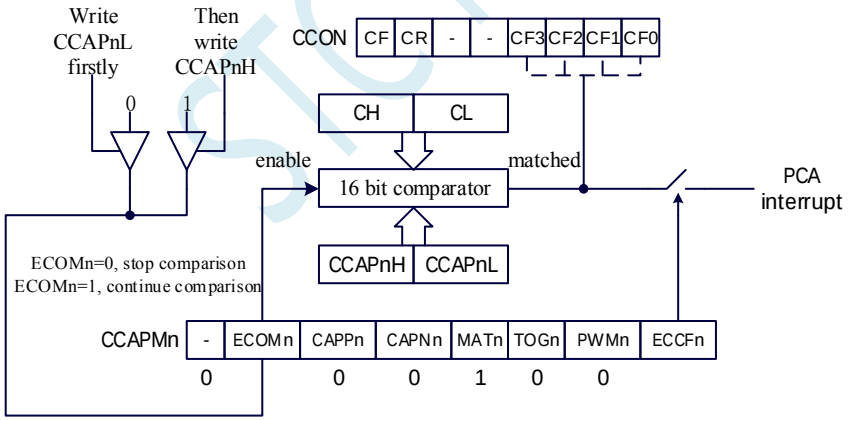

PCA software timer mode

18.2.3 High Speed pulse Output Mode

When the count value of the PCA counter matches the value of the capture register, the CCPn output of the PCA module will hop. To activate the high speed pulse output mode, the TOGn, MATn, and ECOMn bits of the CCAPMn register must be set.

The structure of PCA module working in high-speed pulse output mode is shown below:

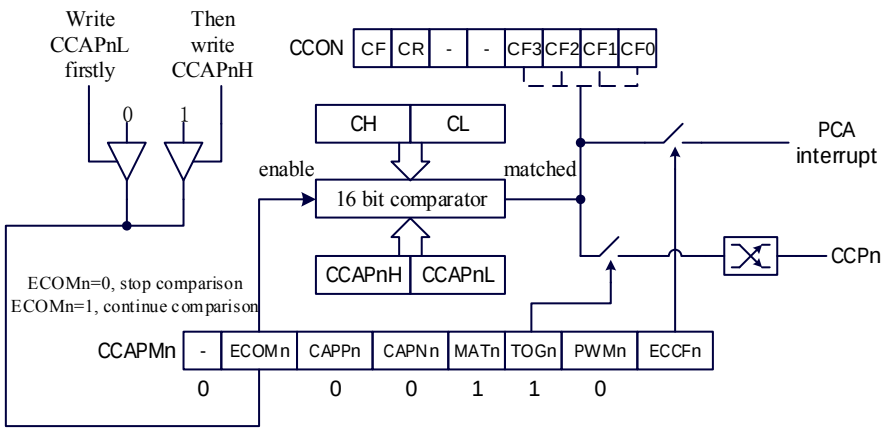

PCA high speed pulse output mode

18.2.4 Pulse Width Modulator Mode (PWM mode)

18.2.4.1 8-bit PWM Mode

Pulse width modulation is a technique that uses a program to control the duty ratio, cycle and phase of a waveform. It is widely used in applications such as three-phase motor drive and D/A conversion. The PCA modules of the STC8F family of microcontrollers can be configured to operate in 8-bit, 7-bit, 6-bit or 10-bit PWM mode by setting corresponding PCA_PWMn registers. To enable the PWM function of the PCA module, the PWMn and ECOMn bits of the module register CCAPMn must be set.

When EBSn [1:0] in the PCA_PWMn register is set to 00, the PCAn operates in 8-bit PWM mode, where {0, CL [7: 0]} will be compared with the capture registers {EPCnL, CCAPnL [7: 0] }. When PCA modules are operating in 8-bit PWM mode, the output frequencies of them are the same because all the modules share a single PCA counter. The output duty ratio of each module is set using the registers {EPCnL, CCAPnL [7: 0]}. The output is low when the value of {0, CL [7: 0]} is less than {EPCnL, CCAPnL [7: 0]}, and the output is high when the value of {0, CL [7: 0]} is equal to or greater than {EPCnL , CCAPnL [7: 0]}. When CL [7: 0] overflows from FF to 00, the contents of {EPCnH, CCAPnH [7: 0]} are reloaded into {EPCnL, CCAPnL [7: 0]}. This makes it possible to update the PWM without interference.

The structure of PCA module working in 8-bit PWM mode is shown below:

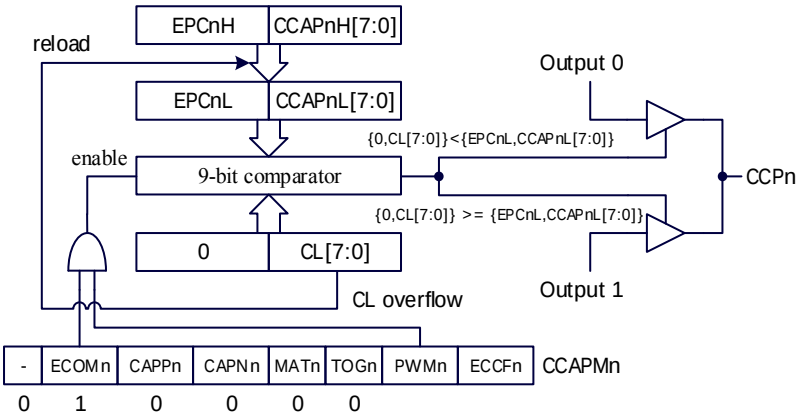

PCA 8-bit PWM mode

18.2.4.2 7-bit PWM Mode

When EBSn [1:0] in the PCA_PWMn register is set to 01, the PCAn operates in 7-bit PWM mode, where {0, CL [6: 0]} will be compared with the capture registers {EPCnL, CCAPnL [6: 0] }. When PCA modules are operating in 6-bit PWM mode, the output frequencies of them are the same because all the modules share a single PCA counter. The output duty ratio of each module is set using the registers {EPCnL, CCAPnL [6: 0]}. The output is low when the value of {0, CL [6: 0]} is less than {EPCnL, CCAPnL [6: 0]}, and the output is high when the value of {0, CL [6: 0]} is equal to or greater than {EPCnL , CCAPnL [6: 0]}. When CL [6: 0] overflows from 7F to 00, the contents of {EPCnH, CCAPnH [6: 0]} are reloaded into {EPCnL, CCAPnL [6: 0]}. This makes it possible to update the PWM without interference.

The structure of PCA module working in 6-bit PWM mode is shown below:

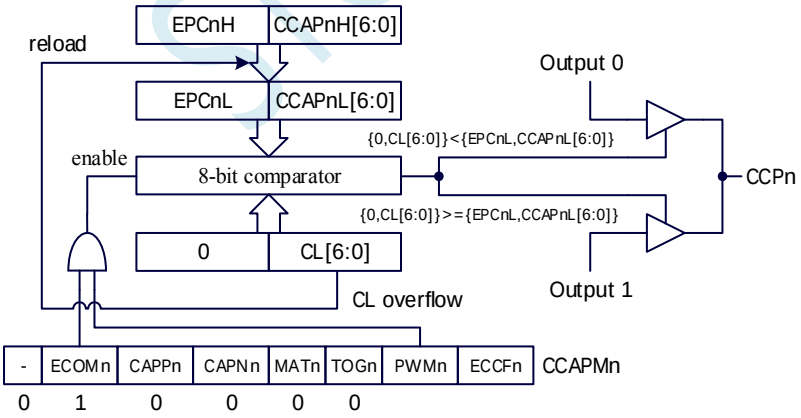

PCA 7-bit PWM mode

18.2.4.3 6-bit PWM Mode

When EBSn [1: 0] in the PCA_PWMn register is set to 10, the PCAn operates in 6-bit PWM mode, where {0, CL [5: 0]} will be compared with the capture registers {EPCnL, CCAPnL [5: 0] }. When PCA modules are operating in 6-bit PWM mode, the output frequencies of them are the same because all the modules share a

single PCA counter. The output duty ratio of each module is set using the registers {EPCnL, CCAPnL [5: 0]}. The output is low when the value of {0, CL [5: 0]} is less than {EPCnL, CCAPnL [5: 0]}, and the output is high when the value of {0, CL [5: 0]} is equal to or greater than {EPCnL , CCAPnL [5: 0]}. When CL [5: 0] overflows from 3F to 00, the contents of {EPCnH, CCAPnH [5: 0]} are reloaded into {EPCnL, CCAPnL [5: 0]}. This makes it possible to update the PWM without interference.

The structure of PCA module working in 6-bit PWM mode is shown below:

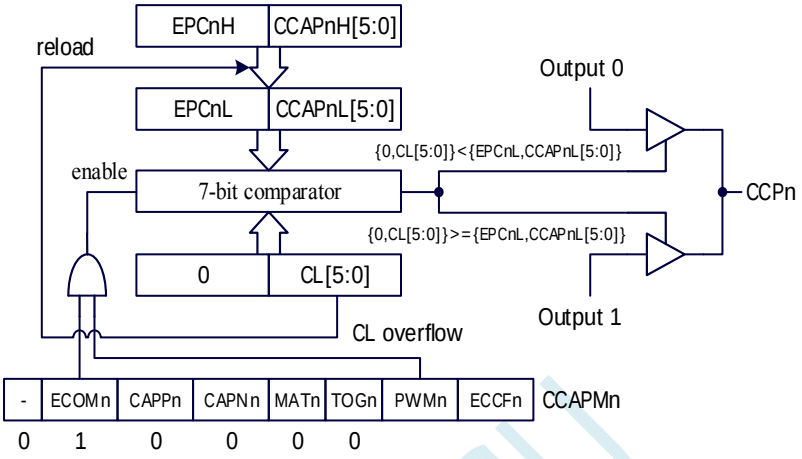

PCA 6-bit PWM mode

18.2.4.4 10-bit PWM Mode

When EBSn [1: 0] in the PCA_PWMn register is set to 11, the PCAn operates in 10-bit PWM mode, where {CH[1:0],CL[7:0]} will be compared with the capture registers{EPCnL,XCCAPnL[1:0],CCAPnL[7:0]}. When PCA modules are operating in 10-bit PWM mode, the output frequencies of them are the same because all the modules share a single PCA counter. The output duty ratio of each module is set using the registers {EPCnL,XCCAPnL[1:0],CCAPnL[7:0]}. The output is low when the value of {CH[1:0],CL[7:0]} is less than {EPCnL,XCCAPnL[1:0],CCAPnL[7:0]}, and the output is high when the value of {CH[1:0],CL[7:0]} is equal to or greater than {EPCnL,XCCAPnL[1:0],CCAPnL[7:0]}. When {CH[1:0],CL[7:0]} overflows from 3FF to 00, the contents of {EPCnH,XCCAPnH[1:0],CCAPnH[7:0]} are reloaded into {EPCnL,XCCAPnL[1:0], CCAPnL[7:0]}. This makes it possible to update the PWM without interference.

The structure of PCA module working in 10-bit PWM mode is shown below:

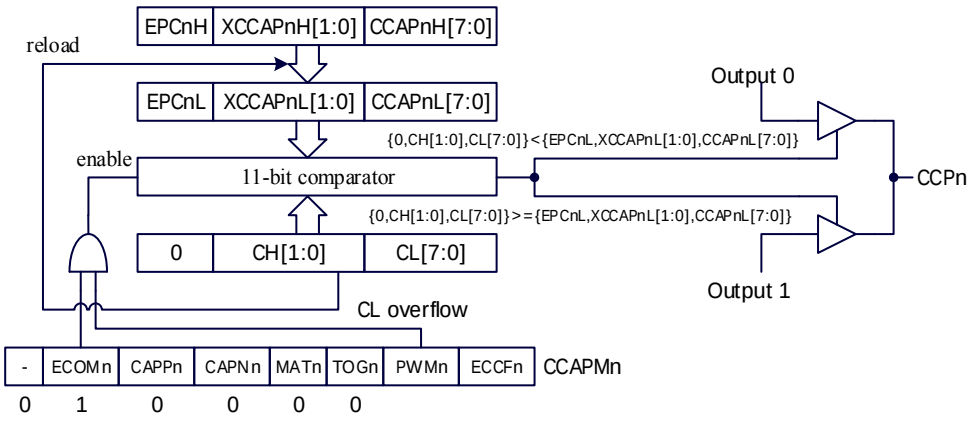

PCA 10-bit PWM mode

18.3 Sample program

18.3.1 PCA outputs PWM(6/7/8/10 bit)

Assembly code

```
;The test operating frequency is 11.0592 MHz

CCON        DATA    0D8H
CF          BIT     CCON.7
CR          BIT     CCON.6
CCF3        BIT     CCON.3
CCF2        BIT     CCON.2
CCF1        BIT     CCON.1
CCF0        BIT     CCON.0
CMOD        DATA    0D9H
CL          DATA    0E9H
CH          DATA    0F9H
CCAPM0      DATA    0DAH
CCAP0L      DATA    0EAH
CCAP0H      DATA    0FAH
PCA_PWM0    DATA    0F2H
CCAPM1      DATA    0DBH
CCAP1L      DATA    0EBH
CCAP1H      DATA    0FBH
PCA_PWM1    DATA    0F3H
CCAPM2      DATA    0DCH
CCAP2L      DATA    0ECH
CCAP2H      DATA    0FCH
PCA_PWM2    DATA    0F4H
CCAPM3      DATA    0DDH
CCAP3L      DATA    0EDH
CCAP3H      DATA    0FDH
PCA_PWM3    DATA    0F5H

            ORG     0000H
            LJMP    MAIN

            ORG     0100H
```

```
MAIN:
        MOV     SP,#3FH

        MOV     CCON,#00H
        MOV     CMOD,#08H           ;PCA clock is the system clock
        MOV     CL,#00H
        MOV     CH,#0H
        MOV     CCAPM0,#42H         ;PCA module 0 is PWM mode
        MOV     PCA_PWM0,#80H       ;PCA Module 0 outputs 6-bit PWM
        MOV     CCAP0L,#20H         ;PWM duty cycle is 50%[(40H-20H)/40H]
        MOV     CCAP0H,#20H
        MOV     CCAPM1,#42H         ;PCA module 1 is PWM mode
        MOV     PCA_PWM1,#40H       ;PCA Module 1 outputs 7-bit PWM
        MOV     CCAP1L,#20H         ;PWM duty cycle is 75%[(80H-20H)/80H]
        MOV     CCAP1H,#20H
        MOV     CCAPM2,#42H         ;PCA module 2 is PWM mode
        MOV     PCA_PWM2,#00H       ;PCA Module 2 outputs 8-bit PWM
        MOV     CCAP2L,#20H         ;PWM duty cycle is 87.5%[(100H-20H)/100H]
        MOV     CCAP2H,#20H
        MOV     CCAPM3,#42H         ;PCA module 3 is PWM mode
        MOV     PCA_PWM3,#0C0H      ;PCA Module 3 outputs 10-bit PWM
        MOV     CCAP3L,#20H         ;PWM duty cycle is96.875%[(400H-20H)/400H]
        MOV     CCAP3H,#20H
        SETB    CR                  ;Start PCA timer

        JMP     $

        END
```

C code

```
#include "reg51.h"
#include "intrins.h"

//The test operating frequency is 11.0592 MHz

sfr     CCON        =   0xd8;
sbit    CF          =   CCON^7;
sbit    CR          =   CCON^6;
sbit    CCF3        =   CCON^3;
sbit    CCF2        =   CCON^2;
sbit    CCF1        =   CCON^1;
sbit    CCF0        =   CCON^0;
sfr     CMOD        =   0xd9;
sfr     CL          =   0xe9;
sfr     CH          =   0xf9;
sfr     CCAPM0      =   0xda;
sfr     CCAP0L      =   0xea;
sfr     CCAP0H      =   0xfa;
sfr     PCA_PWM0    =   0xf2;
sfr     CCAPM1      =   0xdb;
sfr     CCAP1L      =   0xeb;
sfr     CCAP1H      =   0xfb;
sfr     PCA_PWM1    =   0xf3;
sfr     CCAPM2      =   0xdc;
sfr     CCAP2L      =   0xec;
sfr     CCAP2H      =   0xfc;
sfr     PCA_PWM2    =   0xf4;
```

```
sfr     CCAPM3    =   0xdd;
sfr     CCAP3L    =   0xed;
sfr     CCAP3H    =   0xfd;
sfr     PCA_PWM3  =   0xf5;

void main()
{
    CCON = 0x00;
    CMOD = 0x08;                    //PCA clock is the system clock
    CL = 0x00;
    CH = 0x00;
    CCAPM0 = 0x42;                  //PCA module 0 is PWM mode
    PCA_PWM0 = 0x80;                //PCA Module 0 outputs 6-bit PWM
    CCAP0L = 0x20;                  //PWM duty cycle is 50%[(40H-20H)/40H]
    CCAP0H = 0x20;
    CCAPM1 = 0x42;                  //PCA module 1 is PWM mode
    PCA_PWM1 = 0x40;                //PCA Module 1 outputs 7-bit PWM
    CCAP1L = 0x20;                  /PWM duty cycle is 75%[(80H-20H)/80H]
    CCAP1H = 0x20;
    CCAPM2 = 0x42;                  //PCA module 2 is PWM mode
    PCA_PWM2 = 0x00;                //PCA Module 1 outputs8-bit PWM
    CCAP2L = 0x20;                  //PWM duty cycle is 87.5%[(100H-20H)/100H]
    CCAP2H = 0x20;
    CCAPM3 = 0x42;                  //PCA module 3 is PWM mode
    PCA_PWM3 = 0xc0;                //PCA Module 1 outputs10-bit PWM
    CCAP3L = 0x20;                  //PWM duty cycle is96.875%[(400H-20H)/400H]
    CCAP3H = 0x20;
    CR = 1;                         //Start PCA timer

    while (1);
}
```

18.3.2 PCA Capture measurement pulse width

Assembly code

```
;The test operating frequency is 11.0592 MHz

CCON        DATA    0D8H
CF          BIT     CCON.7
CR          BIT     CCON.6
CCF3        BIT     CCON.3
CCF2        BIT     CCON.2
CCF1        BIT     CCON.1
CCF0        BIT     CCON.0
CMOD        DATA    0D9H
CL          DATA    0E9H
CH          DATA    0F9H
CCAPM0      DATA    0DAH
CCAP0L      DATA    0EAH
CCAP0H      DATA    0FAH
PCA_PWM0    DATA    0F2H
CCAPM1      DATA    0DBH
CCAP1L      DATA    0EBH
CCAP1H      DATA    0FBH
PCA_PWM1    DATA    0F3H
CCAPM2      DATA    0DCH
```

```
CCAP2L      DATA    0ECH
CCAP2H      DATA    0FCH
PCA_PWM2    DATA    0F4H
CCAPM3      DATA    0DDH
CCAP3L      DATA    0EDH
CCAP3H      DATA    0FDH
PCA_PWM3    DATA    0F5H

CNT         DATA    20H
COUNT0      DATA    21H             ;3 bytes
COUNT1      DATA    24H             ;3 bytes
LENGTH      DATA    27H             ;3 bytes, (COUNT1-COUNT0)

            ORG     0000H
            LJMP    MAIN
            ORG     003BH
            LJMP    PCAISR

            ORG     0100H
PCAISR:
            PUSH    ACC
            PUSH    PSW
            JNB     CF,CHECKCCF0
            CLR     CF              ;Clear interrupt flag
            INC     CNT             ; PCA timing overflow times+1
CHECKCCF0:
            JNB     CCF0,ISREXIT
            CLR     CCF0
            MOV     COUNT0,COUNT1   ;Back up the last captured value
            MOV     COUNT0+1,COUNT1+1
            MOV     COUNT0+2,COUNT1+2
            MOV     COUNT1,CNT      ;Save this captured value
            MOV     COUNT1+1,CCAP0H
            MOV     COUNT1+2,CCAP0L
            CLR     C               ;Calculate twice the capture difference
            MOV     A,COUNT1+2
            SUBB    A,COUNT0+2
            MOV     LENGTH+2,A
            MOV     A,COUNT1+1
            SUBB    A,COUNT0+1
            MOV     LENGTH+1,A
            MOV     A,COUNT1
            SUBB    A,COUNT0
            MOV     LENGTH,A        ;LENGTH is the pulse width of the capture.
ISREXIT:
            POP     PSW
            POP     ACC
            RETI

MAIN:
            MOV     SP,#3FH

            CLR     A
            MOV     CNT,A           ;User variable initialization
            MOV     COUNT0,A
            MOV     COUNT0+1,A
            MOV     COUNT0+2,A
            MOV     COUNT1,A
```

```
                MOV     COUNT1+1,A
                MOV     COUNT1+2,A
                MOV     LENGTH,A
                MOV     LENGTH+1,A
                MOV     LENGTH+2,A

                MOV     CCON,#00H
                MOV     CMOD,#09H           ;PCA clock is system clock, enabling PCA timing interrupt
                MOV     CL,#00H
                MOV     CH,#0H
                MOV     CCAPM0,#11H         ;PCA module 0 is 16 bit capture mode (descent edge capture)
;               MOV     CCAPM0,#21H         ;PCA module 0 is 16 bit capture mode (rise edge capture)
;               MOV     CCAPM0,#31H         ;PCA module 0 is 16-bit capture mode (edge capture)
                MOV     CCAP0L,#00H
                MOV     CCAP0H,#00H
                SETB    CR                  ;Start PCA timer
                SETB    EA

                JMP     $

                END
```

C code

```
#include "reg51.h"
#include "intrins.h"

//The test operating frequency is 11.0592 MHz

sfr     CCON        =   0xd8;
sbit    CF          =   CCON^7;
sbit    CR          =   CCON^6;
sbit    CCF3        =   CCON^3;
sbit    CCF2        =   CCON^2;
sbit    CCF1        =   CCON^1;
sbit    CCF0        =   CCON^0;
sfr     CMOD        =   0xd9;
sfr     CL          =   0xe9;
sfr     CH          =   0xf9;
sfr     CCAPM0      =   0xda;
sfr     CCAP0L      =   0xea;
sfr     CCAP0H      =   0xfa;
sfr     PCA_PWM0    =   0xf2;
sfr     CCAPM1      =   0xdb;
sfr     CCAP1L      =   0xeb;
sfr     CCAP1H      =   0xfb;
sfr     PCA_PWM1    =   0xf3;
sfr     CCAPM2      =   0xdc;
sfr     CCAP2L      =   0xec;
sfr     CCAP2H      =   0xfc;
sfr     PCA_PWM2    =   0xf4;
sfr     CCAPM3      =   0xdd;
sfr     CCAP3L      =   0xed;
sfr     CCAP3H      =   0xfd;
sfr     PCA_PWM3    =   0xf5;

unsigned char   cnt;            //store PCA timing overflow times
unsigned long   count0;         //Record the previous capture value
```

```
unsigned long   count1;                 //Record the capture value for this time
unsigned long   length;                 //store time length of signal

void PCA_Isr() interrupt 7
{
    if (CF)
    {
        CF = 0;
        cnt++;                          //PCA timing overflow times+1
    }
    if (CCF0)
    {
        CCF0 = 0;
        count0 = count1;                //Back up the last captured value
        ((unsigned char *)&count1)[3] = CCAP0L;
        ((unsigned char *)&count1)[2] = CCAP0H;
        ((unsigned char *)&count1)[1] = cnt;
        ((unsigned char *)&count1)[0] = 0;
        length = count1 - count0;       //length is pulse width for capture
    }
}

void main()
{
    cnt = 0;                            //User variable initialization
    count0 = 0;
    count1 = 0;
    length = 0;
    CCON = 0x00;
    CMOD = 0x09;                        //PCA clock is system clock, enabling PCA timing interrupt
    CL = 0x00;
    CH = 0x00;
    CCAPM0 = 0x11;                      //PCA module 0 is 16 bit capture mode (descent edge capture)
    CCAPM0 = 0x21;                      //PCA module 0 is 16 bit capture mode (descent edge capture)
    CCAPM0 = 0x31;                      //PCA module 0 is 16 bit capture mode (descent edge capture)
    CCAP0L = 0x00;
    CCAP0H = 0x00;
    CR = 1;                             //Start PCA timer
    EA = 1;

    while (1);
}
```

18.3.3 PCA implements 16-bit software timing

Assembly code

```
;The test operating frequency is 11.0592 MHz

CCON        DATA    0D8H
CF          BIT     CCON.7
CR          BIT     CCON.6
CCF3        BIT     CCON.3
CCF2        BIT     CCON.2
CCF1        BIT     CCON.1
CCF0        BIT     CCON.0
CMOD        DATA    0D9H
```

```
CL          DATA    0E9H
CH          DATA    0F9H
CCAPM0      DATA    0DAH
CCAP0L      DATA    0EAH
CCAP0H      DATA    0FAH
PCA_PWM0    DATA    0F2H
CCAPM1      DATA    0DBH
CCAP1L      DATA    0EBH
CCAP1H      DATA    0FBH
PCA_PWM1    DATA    0F3H
CCAPM2      DATA    0DCH
CCAP2L      DATA    0ECH
CCAP2H      DATA    0FCH
PCA_PWM2    DATA    0F4H
CCAPM3      DATA    0DDH
CCAP3L      DATA    0EDH
CCAP3H      DATA    0FDH
PCA_PWM3    DATA    0F5H

T50HZ       EQU     2400H           ;11059200/12/2/50

            ORG     0000H
            LJMP    MAIN
            ORG     003BH
            LJMP    PCAISR

            ORG     0100H
PCAISR:
            PUSH    ACC
            PUSH    PSW
            CLR     CCF0
            MOV     A,CCAP0L
            ADD     A,#LOW T50HZ
            MOV     CCAP0L,A
            MOV     A,CCAP0H
            ADDC    A,#HIGH T50HZ
            MOV     CCAP0H,A
            CPL     P1.0            ;Test port, flashing frequency is 50Hz
            POP     PSW
            POP     ACC
            RETI

MAIN:
            MOV     SP,#3FH

            MOV     CCON,#00H
            MOV     CMOD,#00H       ;PCA clock is the system clock/12
            MOV     CL,#00H
            MOV     CH,#0H
            MOV     CCAPM0,#49H     ;PCA module 0 is 16-bit timer mode
            MOV     CCAP0L,#LOW T50HZ
            MOV     CCAP0H,#HIGH T50HZ
            SETB    CR              ;Start PCA timer
            SETB    EA

            JMP     $
```

```
END
```

C code

```
#include "reg51.h"
#include "intrins.h"

//The test operating frequency is 11.0592 MHz

#define     T50HZ           (11059200L / 12 / 2 / 50)

sfr         CCON        =   0xd8;
sbit        CF          =   CCON^7;
sbit        CR          =   CCON^6;
sbit        CCF3        =   CCON^3;
sbit        CCF2        =   CCON^2;
sbit        CCF1        =   CCON^1;
sbit        CCF0        =   CCON^0;
sfr         CMOD        =   0xd9;
sfr         CL          =   0xe9;
sfr         CH          =   0xf9;
sfr         CCAPM0      =   0xda;
sfr         CCAP0L      =   0xea;
sfr         CCAP0H      =   0xfa;
sfr         PCA_PWM0    =   0xf2;
sfr         CCAPM1      =   0xdb;
sfr         CCAP1L      =   0xeb;
sfr         CCAP1H      =   0xfb;
sfr         PCA_PWM1    =   0xf3;
sfr         CCAPM2      =   0xdc;
sfr         CCAP2L      =   0xec;
sfr         CCAP2H      =   0xfc;
sfr         PCA_PWM2    =   0xf4;
sfr         CCAPM3      =   0xdd;
sfr         CCAP3L      =   0xed;
sfr         CCAP3H      =   0xfd;
sfr         PCA_PWM3    =   0xf5;

sbit        P10         =   P1^0;

unsigned int    value;

void PCA_Isr() interrupt 7
{
    CCF0 = 0;
    CCAP0L = value;
    CCAP0H = value >> 8;
    value += T50HZ;

    P10 = !P10;                     //Test port
}

void main()
{
    CCON = 0x00;
    CMOD = 0x00;                    //The PCA clock is the system clock/12
    CL = 0x00;
    CH = 0x00;
```

```
    CCAPM0 = 0x49;              //PCA module 0 is 16-bit timer mode
    value = T50HZ;
    CCAP0L = value;
    CCAP0H = value >> 8;
    value += T50HZ;
    CR = 1;                     //Start PCA timer
    EA = 1;

    while (1);
}
```

18.3.4 PCA Output high speed pulse

Assembly code

```
;The test operating frequency is 11.0592 MHz

CCON        DATA    0D8H
CF          BIT     CCON.7
CR          BIT     CCON.6
CCF3        BIT     CCON.3
CCF2        BIT     CCON.2
CCF1        BIT     CCON.1
CCF0        BIT     CCON.0
CMOD        DATA    0D9H
CL          DATA    0E9H
CH          DATA    0F9H
CCAPM0      DATA    0DAH
CCAP0L      DATA    0EAH
CCAP0H      DATA    0FAH
PCA_PWM0    DATA    0F2H
CCAPM1      DATA    0DBH
CCAP1L      DATA    0EBH
CCAP1H      DATA    0FBH
PCA_PWM1    DATA    0F3H
CCAPM2      DATA    0DCH
CCAP2L      DATA    0ECH
CCAP2H      DATA    0FCH
PCA_PWM2    DATA    0F4H
CCAPM3      DATA    0DDH
CCAP3L      DATA    0EDH
CCAP3H      DATA    0FDH
PCA_PWM3    DATA    0F5H

T38K4HZ     EQU     90H                 ;11059200/2/38400

            ORG     0000H
            LJMP    MAIN
            ORG     003BH
            LJMP    PCAISR

            ORG     0100H
PCAISR:
            PUSH    ACC
            PUSH    PSW
            CLR     CCF0
            MOV     A,CCAP0L
```

```
            ADD     A,#LOW T38K4HZ
            MOV     CCAP0L,A
            MOV     A,CCAP0H
            ADDC    A,#HIGH T38K4HZ
            MOV     CCAP0H,A
            POP     PSW
            POP     ACC
            RETI

MAIN:
            MOV     SP,#3FH

            MOV     CCON,#00H
            MOV     CMOD,#08H           ;PCA clock is the system clock
            MOV     CL,#00H
            MOV     CH,#0H
            MOV     CCAPM0,#4DH         ;PCA module 0 is in 16 bit timer mode and enables pulse output
            MOV     CCAP0L,#LOW T38K4HZ
            MOV     CCAP0H,#HIGH T38K4HZ
            SETB    CR                  ;Start PCA timer
            SETB    EA

            JMP     $

            END
```

C code

```
#include "reg51.h"
#include "intrins.h"

//The test operating frequency is 11.0592 MHz

#define     T38K4HZ         (11059200L / 2 / 38400)

sfr         CCON        =   0xd8;
sbit        CF          =   CCON^7;
sbit        CR          =   CCON^6;
sbit        CCF3        =   CCON^3;
sbit        CCF2        =   CCON^2;
sbit        CCF1        =   CCON^1;
sbit        CCF0        =   CCON^0;
sfr         CMOD        =   0xd9;
sfr         CL          =   0xe9;
sfr         CH          =   0xf9;
sfr         CCAPM0      =   0xda;
sfr         CCAP0L      =   0xea;
sfr         CCAP0H      =   0xfa;
sfr         PCA_PWM0    =   0xf2;
sfr         CCAPM1      =   0xdb;
sfr         CCAP1L      =   0xeb;
sfr         CCAP1H      =   0xfb;
sfr         PCA_PWM1    =   0xf3;
sfr         CCAPM2      =   0xdc;
sfr         CCAP2L      =   0xec;
sfr         CCAP2H      =   0xfc;
sfr         PCA_PWM2    =   0xf4;
sfr         CCAPM3      =   0xdd;
```

```
sfr     CCAP3L     =    0xed;
sfr     CCAP3H     =    0xfd;
sfr     PCA_PWM3   =    0xf5;

unsigned int    value;

void PCA_Isr() interrupt 7
{
    CCF0 = 0;
    CCAP0L = value;
    CCAP0H = value >> 8;
    value += T38K4HZ;
}

void main()
{
    CCON = 0x00;
    CMOD = 0x08;                    //PCA clock is the system clock
    CL = 0x00;
    CH = 0x00;
    CCAPM0 = 0x4d;                  //PCA module 0 is in 16 bit timer mode and enables pulse output
    value = T38K4HZ;
    CCAP0L = value;
    CCAP0H = value >> 8;
    value += T38K4HZ;
    CR = 1;                         //Start PCA timer
    EA = 1;

    while (1);
}
```

18.3.5 PCA extends external interrupt

Assembly code

```
;The test operating frequency is 11.0592 MHz

CCON        DATA    0D8H
CF          BIT     CCON.7
CR          BIT     CCON.6
CCF3        BIT     CCON.3
CCF2        BIT     CCON.2
CCF1        BIT     CCON.1
CCF0        BIT     CCON.0
CMOD        DATA    0D9H
CL          DATA    0E9H
CH          DATA    0F9H
CCAPM0      DATA    0DAH
CCAP0L      DATA    0EAH
CCAP0H      DATA    0FAH
PCA_PWM0    DATA    0F2H
CCAPM1      DATA    0DBH
CCAP1L      DATA    0EBH
CCAP1H      DATA    0FBH
PCA_PWM1    DATA    0F3H
CCAPM2      DATA    0DCH
CCAP2L      DATA    0ECH
```

```
CCAP2H      DATA    0FCH
PCA_PWM2    DATA    0F4H
CCAPM3      DATA    0DDH
CCAP3L      DATA    0EDH
CCAP3H      DATA    0FDH
PCA_PWM3    DATA    0F5H

            ORG     0000H
            LJMP    MAIN
            ORG     003BH
            LJMP    PCAISR

            ORG     0100H
PCAISR:
            CLR     CCF0
            CPL     P1.0
            RETI

MAIN:
            MOV     SP,#3FH

            MOV     CCON,#00H
            MOV     CMOD,#08H           ;PCA clock is the system clock
            MOV     CL,#00H
            MOV     CH,#0H
            MOV     CCAPM0,#11          ;Extend external port CCP0 to drop edge interrupt port
;           MOV     CCAPM0,#21H         ;Extend external port CCP0 to upper-edge interrupt port
;           MOV     CCAPM0,#31H         ;Extend external port CCP0 to edge interrupt port
            MOV     CCAP0L,#0
            MOV     CCAP0H,#0
            SETB    CR                  ;Start PCA timer
            SETB    EA

            JMP     $

            END
```

C code

```
#include "reg51.h"
#include "intrins.h"

//The test operating frequency is 11.0592 MHz

sfr     CCON        =   0xd8;
sbit    CF          =   CCON^7;
sbit    CR          =   CCON^6;
sbit    CCF3        =   CCON^3;
sbit    CCF2        =   CCON^2;
sbit    CCF1        =   CCON^1;
sbit    CCF0        =   CCON^0;
sfr     CMOD        =   0xd9;
sfr     CL          =   0xe9;
sfr     CH          =   0xf9;
sfr     CCAPM0      =   0xda;
sfr     CCAP0L      =   0xea;
sfr     CCAP0H      =   0xfa;
sfr     PCA_PWM0    =   0xf2;
```

```
sfr     CCAPM1      =   0xdb;
sfr     CCAP1L      =   0xeb;
sfr     CCAP1H      =   0xfb;
sfr     PCA_PWM1    =   0xf3;
sfr     CCAPM2      =   0xdc;
sfr     CCAP2L      =   0xec;
sfr     CCAP2H      =   0xfc;
sfr     PCA_PWM2    =   0xf4;
sfr     CCAPM3      =   0xdd;
sfr     CCAP3L      =   0xed;
sfr     CCAP3H      =   0xfd;
sfr     PCA_PWM3    =   0xf5;

sbit    P10         =   P1^0;

void PCA_Isr() interrupt 7
{
    CCF0 = 0;
    P10 = !P10;
}

void main()
{
    CCON = 0x00;
    CMOD = 0x08;                    //PCA clock is the system clock
    CL = 0x00;
    CH = 0x00;
    CCAPM0 = 0x11;                  //Extend external port CCP0 to drop edge interrupt port
//  CCAPM0 = 0x21;                  //Extend external port CCP0 to upper-edge interrupt port
//  CCAPM0 = 0x31;                  //Extend external port CCP0 to edge interrupt port
    CCAP0L = 0;
    CCAP0H = 0;
    CR = 1;                         //Start PCA timer
    EA = 1;

    while (1);
}
```

19 Enhanced PWM

A set of individually enhanced 8-channel PWM waveform generators are integrated in the STC8F family of microcontrollers. There is a 15-bit PWM counter in the PWM waveform generator which is used for 8 channel PWMs. The initial level of each PWM can be set. In addition, two counters T1 and T2 are designed in the PWM waveform generator to control the waveform hopping for each PWM. The width of high and low level of each PWM can be set very flexibly, so that the PWM duty ratio and PWM output delay can be controlled. Because the 8 PWMs are independent and the initial state of each PWM can be set, any two of them can be used together to achieve complementary applications such as symmetrical output and dead band control.

The enhanced PWM waveform generators also feature the ability to monitor external abnormal events , such as external port P3.5 abnormal level and the abnormal comparator results. It can be used to shutdown PWM outputs immediately. The PWM waveform generator can also be associated with an ADC. Any point in the PWM cycle can be set to trigger the ADC conversion event.

19.1 PWM Related Registers

Symbol	Description	Address	Bit Address and Symbol								Value after reset
			B7	B6	B5	B4	B3	B2	B1	B0	
PWMCFG	PWM Configuration Register	F1H	CBIF	ETADC	-	-	-	-	-	-	00xx,xxxx
PWMIF	PWM Interrupt Flag register	F6H	C7IF	C6IF	C5IF	C4IF	C3IF	C2IF	C1IF	C0IF	0000,0000
PWMFDCR	PWM Fault Dectection Control Register	F7H	INVCMP	INVIO	ENFD	FLTFLIO	EFDI	FDCMP	FDIO	FDIF	0000,0000
PWMCR	PWM Control register	FEH	ENPWM	ECBI	-	-	-	-	-	-	00xx,xxxx

Symbol	Description	Address	Bit Address and Symbol								Value after reset
			B7	B6	B5	B4	B3	B2	B1	B0	
PWMCH	PWM Counter High	FFF0H	-								x000,0000
PWMCL	PWM Counter low	FFF1H									0000,0000
PWMCKS	PWM Clock Selection register	FFF2H	-	-	-	SELT2	PWM_PS[3:0]				xxx0,0000
TADCPH	Trigger ADC count value high	FFF3H	-								x000,0000
TADCPL	Trigger ADC count value low	FFF4H									0000,0000
PWM0T1H	PWM0 Timer1 high	FF00H	-								x000,0000
PWM0T1L	PWM0Timer1 low	FF01H									0000,0000
PWM0T2H	PWM0Timer2 high	FF02H	-								x000,0000
PWM0T2L	PWM0Timer2 low	FF03H									0000,0000
PWM0CR	PWM0 Control register	FF04H	ENC0O	C0INI	-	C0_S[1:0]		EC0I	EC0T2SI	EC0T1SI	00x0,0000
PWM0HLD	PWM0 Level Hold Control Register	FF05H	-	-	-	-	-	-	HC0H	HC0L	xxxx,xx00
PWM1T1H	PWM1Timer1 high	FF10H	-								x000,0000
PWM1T1L	PWM1Timer1 low	FF11H									0000,0000

PWM1T2H	PWM1Timer2 high	FF12H	-							x000,0000
PWM1T2L	PWM1Timer2 low	FF13H								0000,0000
PWM1CR	PWM1 Control register	FF14H	ENC1O	C1INI	-	C1_S[1:0]		EC1I	EC1T2SI	EC1T1SI	00x0,0000
PWM1HLD	PWM1 Level Hold Control Register	FF15H	-	-	-	-	-	-	HC1H	HC1L	xxxx,xx00
PWM2T1H	PWM2Timer1 high	FF20H	-							x000,0000
PWM2T1L	PWM2Timer1 low	FF21H								0000,0000
PWM2T2H	PWM2Timer2 high	FF22H	-							x000,0000
PWM2T2L	PWM2Timer2 low	FF23H								0000,0000
PWM2CR	PWM2 Control register	FF24H	ENC2O	C2INI	-	C2_S[1:0]		EC2I	EC2T2SI	EC2T1SI	00x0,0000
PWM2HLD	PWM2 Level Hold Control Register	FF25H	-	-	-	-	-	-	HC2H	HC2L	xxxx,xx00
PWM3T1H	PWM3Timer1 high	FF30H	-							x000,0000
PWM3T1L	PWM3Timer1 low	FF31H								0000,0000
PWM3T2H	PWM3Timer2 high	FF32H	-							x000,0000
PWM3T2L	PWM3Timer2 low	FF33H								0000,0000
PWM3CR	PWM3 Control register	FF34H	ENC3O	C3INI	-	C3_S[1:0]		EC3I	EC3T2SI	EC3T1SI	00x0,0000
PWM3HLD	PWM3 Level Hold Control Register	FF35H	-	-	-	-	-	-	HC3H	HC3L	xxxx,xx00
PWM4T1H	PWM4Timer1 high	FF40H	-							x000,0000
PWM4T1L	PWM4Timer1 low	FF41H								0000,0000
PWM4T2H	PWM4Timer2 high	FF42H	-							x000,0000
PWM4T2L	PWM4Timer2 low	FF43H								0000,0000
PWM4CR	PWM4 Control register	FF44H	ENC4O	C4INI	-	C4_S[1:0]		EC4I	EC4T2SI	EC4T1SI	00x0,0000
PWM4HLD	PWM4 Level Hold Control Register	FF45H	-	-	-	-	-	-	HC4H	HC4L	xxxx,xx00
PWM5T1H	PWM5Timer1 high	FF50H	-							x000,0000
PWM5T1L	PWM5Timer1 low	FF51H								0000,0000
PWM5T2H	PWM5Timer2 high	FF52H	-							x000,0000
PWM5T2L	PWM5Timer2 low	FF53H								0000,0000
PWM5CR	PWM5 Control register	FF54H	ENC5O	C5INI	-	C5_S[1:0]		EC5I	EC5T2SI	EC5T1SI	00x0,0000
PWM5HLD	PWM5 Level Hold Control Register	FF55H	-	-	-	-	-	-	HC5H	HC5L	xxxx,xx00
PWM6T1H	PWM6Timer1 high	FF60H	-							x000,0000
PWM6T1L	PWM6Timer1 low	FF61H								0000,0000
PWM6T2H	PWM6Timer2 high	FF62H	-							x000,0000
PWM6T2L	PWM6Timer2 low	FF63H								0000,0000
PWM6CR	PWM6 Control register	FF64H	ENC6O	C6INI	-	C6_S[1:0]		EC6I	EC6T2SI	EC6T1SI	00x0,0000
PWM6HLD	PWM6 Level Hold Control Register	FF65H	-	-	-	-	-	-	HC6H	HC6L	xxxx,xx00
PWM7T1H	PWM7Timer1 high	FF70H	-							x000,0000
PWM7T1L	PWM7Timer1 low	FF71H								0000,0000
PWM7T2H	PWM7Timer2 high	FF72H	-							x000,0000

STC MCU

PWM7T2L	PWM7Timer2 low	FF73H									0000,0000
PWM7CR	PWM7 Control register	FF74H	ENC7O	C7INI	-	C7_S[1:0]		EC7I	EC7T2SI	EC7T1SI	00x0,0000
PWM7HLD	PWM7 Level Hold Control Register	FF75H	-	-	-	-	-	-	HC7H	HC7L	xxxx,xx00

PWM Configuration Register

Symbol	Address	B7	B6	B5	B4	B3	B2	B1	B0
PWMCFG	F1H	CBIF	ETADC	-	-	-	-	-	-

CBIF: The flag bit of PWM interrupt happened when the PWM counter returns to zero.

The bit will be set to 1 by hardware when the 15-bit PWM counter overflows and returns to zero, and requests interrupt tp CPU. It should be cleared by software.

ETADC: Whether the PWM is associated with the ADC or not.

0: PWM is not associated with ADC.

1: PWM is associated with ADC. A/D conversion is enabled to be triggered at a certain point in the PWM cycle. TADCPH and TADCPL are used to set the counter value.

PWM Interrupt Flag register

Symbol	Address	B7	B6	B5	B4	B3	B2	B1	B0
PWMIF	F6H	C7IF	C6IF	C5IF	C4IF	C3IF	C2IF	C1IF	C0IF

CnIF: The interrupt flag bit of PWMn

Every PWM flip point 1 and flip point 2 can be set. When the flip event occurs, this bit is set by the hardware automatically, and requests an interrupt to CPU. It should be cleared by software.

PWM Fault Dectection Control Register

Symbol	Address	B7	B6	B5	B4	B3	B2	B1	B0
PWMFDCR	F7H	INVCMP	INVIO	ENFD	FLTFLIO	EFDI	FDCMP	FDIO	FDIF

INVCMP: Fault signal of comparator result selection bit

0: the fault signal is the comparator result changing from low to high.

1: the fault signal is the comparator result changing from high to low.

INVIO: Fault signal of external port P3.5 selection bit

0: the fault signal is the external port P.35 signal changing from low to high.

1: the fault signal is the external port P.35 signal changing from high to low.

ENFD: PWM external fault detection enable bit

0: disable the PWM external fault detection.

1: enable the PWM external fault detection.

FLTFLIO: PWM output port control bit when external PWM fault occurs

0: the PWM output port does not change when external PWM fault occurs.

1: the PWM outport port is set as high impedance input mode when external PWM default occurs.

Note: Only the port whose corresponding ENCnO = 1 is forcibly in high impedance state.

EFDI: PWM fault detection interrupt enable bit

0: disable PWM fault detection interrupt (FDIF will still be set by hardware.)

1: enable PWM fault detection interrupt

FDCMP: fault detection of comparator output enable bit

0: the comparator is not associated with PWM.

1: the source of PWM fault detection is comparator output. (The fault type is set by INVCMP.)

FDIO: P3.5 level fault detection enable bit

0: P3.5 level is not associated with PWM

1: the source of PWM fault detection is P3.5. (The fault type is set by INVIO.)

FDIF: the interrupt flag bit of PWM fault detection

It is set automatically by the hardware when a PWM fault occurs. The fault can be comparator output changing from low to high or P2.4 changing high from low.

If EFDI=1, the program will jump to the corresponding interrupt entry to execute interrupt service routine. It should be cleared by software.

PWM Control register

Symbol	Address	B7	B6	B5	B4	B3	B2	B1	B0
PWMCR	FEH	ENPWM	ECBI	-	-	-	-	-	-

ENPWM: Enhanced PWM waveform generator enable bit

0: disable PWM waveform generator.

1: enable PWM waveform generator, and the PWM counter starts counting.

Important notes on ENPWM control bit:

Once ENPWM is enabled, the internal PWM counter will start counting immediately and compare with the value of T1 / T2 two reversal points. ENPWM must be enabled after all other PWM settings are completed. These settings include T1 / T2 flip-flop settings, initial level settings, PWM fault detection settings, and PWM interrupt settings.

The ENPWM control bit is both the enable bit for the entire PWM module and the control bit for the PWM counter to start counting. If the ENPWM control bit is off during PWM counter counting, the PWM count stops immediately. And when the ENPWM control bit is enabled again, the PWM count starts counting from 0 and does not memorize the count value before the PWM stops counting.

ECBI: PWM counter return-to-zero interrupt enable bit

0: disable PWM counter return-to-zero interrupt. (CBIF will still be set by hardware.)

1: enable PWM counter return-to-zero interrupt.

PWM Counter Registers

Symbol	Address	B7	B6	B5	B4	B3	B2	B1	B0
PWMCH	FFF0H	-							
PWMCL	FFF1H								

The PWM counter is a 15-bit register that can be set to any value between 1 and 32767 as the PWM cycle. The counter inside the PWM waveform generator counts from 0 and increments by 1 every PWM clock cycle. When the internal counter reaches the PWM cycle set by [PWMCH, PWMCL], the internal counter of the PWM waveform generator will count from 0 again, and the PWM return-to-zero interrupt flag bit CBIF will be set by the hardware automatically. If ECBI = 1, the program will jump to the corresponding interrupt entry address to execute the interrupt service routine.

PWM Clock Selection register

Symbol	Address	B7	B6	B5	B4	B3	B2	B1	B0
PWMCKS	FFF2H	-	-	-	SELT2	PWM_PS[3:0]			

SELT2: PWM clock source selection bit

0: The PWM clock source is the clock generated by the system clock being divided by the frequency divider

1: The PWM clock source is the overflow pulse of timer 2.

PWM_PS[3:0]：System clock prescaler parameter select bits

SELT2	PWM_PS[3:0]	PWM input clock frequency
1	xxxx	Overflow pulse of timer 2
0	0000	SYSclk/1
0	0001	SYSclk/2
0	0010	SYSclk/3
…	…	…
0	x	SYSclk/(x+1)
…	…	…
0	1111	SYSclk/16

Trigger ADC counter registers

Symbol	Address	B7	B6	B5	B4	B3	B2	B1	B0
TADCPH	FFF3H	-							
TADCPL	FFF4H								

If ETADC=1 and ADC_POWER=1, {TADCPH, TADCPL} forms a 15-bit register. In the PWM counting cycle, the hardware will trigger A/D conversion automatically when the internal PWM counting value equals to the value of {TADCPH, TADCPL}.

PWM Flipping point set count value registers

Symbol	Address	B7	B6	B5	B4	B3	B2	B1	B0
PWM0T1H	FF00H	-							
PWM0T1L	FF01H								
PWM0T2H	FF02H	-							
PWM0T2L	FF03H								
PWM1T1H	FF10H	-							
PWM1T1L	FF11H								
PWM1T2H	FF12H	-							
PWM1T2L	FF13H								
PWM2T1H	FF20H	-							
PWM2T1L	FF21H								
PWM2T2H	FF22H	-							
PWM2T2L	FF23H								
PWM3T1H	FF30H	-							
PWM3T1L	FF31H								
PWM3T2H	FF32H	-							
PWM3T2L	FF33H								
PWM4T1H	FF40H	-							
PWM4T1L	FF41H								

PWM4T2H	FF42H	-	
PWM4T2L	FF43H		
PWM5T1H	FF50H	-	
PWM5T1L	FF51H		
PWM5T2H	FF52H	-	
PWM5T2L	FF53H		
PWM6T1H	FF60H	-	
PWM6T1L	FF61H		
PWM6T2H	FF62H	-	
PWM6T2L	FF63H		
PWM7T1H	FF70H	-	
PWM7T1L	FF71H		
PWM7T2H	FF72H	-	
PWM7T2L	FF73H		

{PWMnT1H, PWMnT1L} and {PWMnT2H, PWMnT2L} of every PWM are combined into two 15-bit registers, which are used to control the two flip points of the PWM output waveform in every PWM cycle of each PWM. During the counting cycle of PWM, the output waveform of PWM will be inverted to low level automatically when the internal counting value of PWM is equal to the value of the first set up point vaule in {PWMnT1H, PWMnT1L}. And the output waveform of the PWM will be inverted to high level automatically when the internal counting value of PWM is queal to the value of the second flip point set by {PWMnT2H, PWMnT2L}.

Note: When the values of {PWMnT1H, PWMnT1L} and {PWMnT2H, PWMnT2L} are set equal, the match of the 2nd set of flip-flops will be ignored and will only flip low.

PWM channel control registers

Symbol	Address	B7	B6	B5	B4	B3	B2	B1	B0
PWM0CR	FF04H	ENC0O	C0INI	-	C0_S[1:0]		EC0I	EC0T2SI	EC0T1SI
PWM1CR	FF14H	ENC1O	C1INI	-	C1_S[1:0]		EC1I	EC1T2SI	EC1T1SI
PWM2CR	FF24H	ENC2O	C2INI	-	C2_S[1:0]		EC2I	EC2T2SI	EC2T1SI
PWM3CR	FF34H	ENC3O	C3INI	-	C3_S[1:0]		EC3I	EC3T2SI	EC3T1SI
PWM4CR	FF44H	ENC4O	C4INI	-	C4_S[1:0]		EC4I	EC4T2SI	EC4T1SI
PWM5CR	FF54H	ENC5O	C5INI	-	C5_S[1:0]		EC5I	EC5T2SI	EC5T1SI
PWM6CR	FF64H	ENC6O	C6INI	-	C6_S[1:0]		EC6I	EC6T2SI	EC6T1SI
PWM7CR	FF74H	ENC7O	C7INI	-	C7_S[1:0]		EC7I	EC7T2SI	EC7T1SI

ENCnO: PWM output enable bit

0: the corresponding port of PWM channel is GPIO.

1: the corresponding port of PWM channel is PWM output port, which is controlled by the PWM waveform generator.

CnINI: the initial level of PWM output

0: the initial level of PWM n is low.

1: the initial level of PWM n is high.

Cn_S[1:0]: PWM output function pins switch selection, please refer to the function pin switching chapter.

ECnI: interrupt enable bit of PWM n

0: disable PWM n interrupt.

1: enable PWM n interrupt.

ECnT2SI: interrupt enable bit of the second flip point of PWM n.

0: disable the interrupt of the second flip point of PWM n.

1: enable the interrupt of the second flip point of PWM n.

ECnT1SI interrupt enable bit of the first flip point of PWM n.

0: disable the interrupt of the first flip point of PWM n.

1: enable the interrupt of the first flip point of PWM n.

PWM Level Hold Control Registers

Symbol	Address	B7	B6	B5	B4	B3	B2	B1	B0
PWM0HLD	FF05H	-	-	-	-	-	-	HC0H	HC0L
PWM1HLD	FF15H	-	-	-	-	-	-	HC1H	HC1L
PWM2HLD	FF25H	-	-	-	-	-	-	HC2H	HC2L
PWM3HLD	FF35H	-	-	-	-	-	-	HC3H	HC3L
PWM4HLD	FF45H	-	-	-	-	-	-	HC4H	HC4L
PWM5HLD	FF55H	-	-	-	-	-	-	HC5H	HC5L
PWM6HLD	FF65H	-	-	-	-	-	-	HC6H	HC6L
PWM7HLD	FF75H	-	-	-	-	-	-	HC7H	HC7L

HCnH: PWM n outputs high compulsively control bit

0: PWM n output normally.

1: PWM n outputs high compulsively.

HCnL: PWM n outputs low compulsively control bit

0: PWM n output normally.

1: PWM n outputs low compulsively.

19.2 Sample program

19.2.1 Output waveforms of any period and arbitrary duty cycle

Assembly code

```
;The test operating frequency is 11.0592MHz

P_SW2       DATA    0BAH

PWMCFG      DATA    0F1H
PWMIF       DATA    0F6H
PWMFDCR     DATA    0F7H
PWMCR       DATA    0FEH
PWMCH       XDATA   0FFF0H
PWMCL       XDATA   0FFF1H
PWMCKS      XDATA   0FFF2H
TADCPH      XDATA   0FFF3H
TADCPL      XDATA   0FFF4H
PWM0T1H     XDATA   0FF00H
PWM0T1L     XDATA   0FF01H
PWM0T2H     XDATA   0FF02H
PWM0T2L     XDATA   0FF03H
```

```
PWM0CR      XDATA   0FF04H
PWM0HLD     XDATA   0FF05H
PWM1T1H     XDATA   0FF10H
PWM1T1L     XDATA   0FF11H
PWM1T2H     XDATA   0FF12H
PWM1T2L     XDATA   0FF13H
PWM1CR      XDATA   0FF14H
PWM1HLD     XDATA   0FF15H
PWM2T1H     XDATA   0FF20H
PWM2T1L     XDATA   0FF21H
PWM2T2H     XDATA   0FF22H
PWM2T2L     XDATA   0FF23H
PWM2CR      XDATA   0FF24H
PWM2HLD     XDATA   0FF25H
PWM3T1H     XDATA   0FF30H
PWM3T1L     XDATA   0FF31H
PWM3T2H     XDATA   0FF32H
PWM3T2L     XDATA   0FF33H
PWM3CR      XDATA   0FF34H
PWM3HLD     XDATA   0FF35H
PWM4T1H     XDATA   0FF40H
PWM4T1L     XDATA   0FF41H
PWM4T2H     XDATA   0FF42H
PWM4T2L     XDATA   0FF43H
PWM4CR      XDATA   0FF44H
PWM4HLD     XDATA   0FF45H
PWM5T1H     XDATA   0FF50H
PWM5T1L     XDATA   0FF51H
PWM5T2H     XDATA   0FF52H
PWM5T2L     XDATA   0FF53H
PWM5CR      XDATA   0FF54H
PWM5HLD     XDATA   0FF55H
PWM6T1H     XDATA   0FF60H
PWM6T1L     XDATA   0FF61H
PWM6T2H     XDATA   0FF62H
PWM6T2L     XDATA   0FF63H
PWM6CR      XDATA   0FF64H
PWM6HLD     XDATA   0FF65H
PWM7T1H     XDATA   0FF70H
PWM7T1L     XDATA   0FF71H
PWM7T2H     XDATA   0FF72H
PWM7T2L     XDATA   0FF73H
PWM7CR      XDATA   0FF74H
PWM7HLD     XDATA   0FF75H

            ORG     0000H
            LJMP    MAIN

            ORG     0100H
MAIN:
            MOV     P_SW2,#80H
            CLR     A
            MOV     DPTR,#PWMCKS
            MOVX    @DPTR,A             ;The PWM clock is a system clock
            MOV     A,#10H
            MOV     DPTR,#PWMCH         ;Set the PWM Period to 1000H PWM Clocks
            MOVX    @DPTR,A
            MOV     A,#00H
```

```
MOV     DPTR,#PWMCL
MOVX    @DPTR,A
MOV     A,#01H
MOV     DPTR,#PWM0T1H       ;Output low level at count value of 100H
MOVX    @DPTR,A
MOV     A,#00H
MOV     DPTR,#PWM0T1L
MOVX    @DPTR,A
MOV     A,#05H
MOV     DPTR,#PWM0T2H       ;Output a high level at a count value of 500H
MOVX    @DPTR,A
MOV     A,#00H
MOV     DPTR,#PWM0T2L
MOVX    @DPTR,A
MOV     A,#80H
MOV     DPTR,#PWM0CR        ;Enable PWM0 output
MOVX    @DPTR,A
MOV     P_SW2,#00H

MOV     PWMCR,#080H         ;Start the PWM module

JMP     $

END
```

C code

```
#include "reg51.h"
#include "intrins.h"

//The test operating frequency is 11.0592MHz

sfr     P_SW2     =   0xba;
sfr     PWMCFG    =   0xf1;
sfr     PWMIF     =   0xf6;
sfr     PWMFDCR   =   0xf7;
sfr     PWMCR     =   0xfe;

#define PWMC      (*(unsigned int volatile xdata *)0xfff0)
#define PWMCKS    (*(unsigned char volatile xdata *)0xfff2)
#define TADCP     (*(unsigned int volatile xdata *)0xfff3)
#define PWM0T1    (*(unsigned int volatile xdata *)0xff00)
#define PWM0T2    (*(unsigned int volatile xdata *)0xff02)
#define PWM0CR    (*(unsigned char volatile xdata *)0xff04)
#define PWM0HLD   (*(unsigned char volatile xdata *)0xff05)
#define PWM1T1    (*(unsigned int volatile xdata *)0xff10)
#define PWM1T2    (*(unsigned int volatile xdata *)0xff12)
#define PWM1CR    (*(unsigned char volatile xdata *)0xff14)
#define PWM1HLD   (*(unsigned char volatile xdata *)0xff15)
#define PWM2T1    (*(unsigned int volatile xdata *)0xff20)
#define PWM2T2    (*(unsigned int volatile xdata *)0xff22)
#define PWM2CR    (*(unsigned char volatile xdata *)0xff24)
#define PWM2HLD   (*(unsigned char volatile xdata *)0xff25)
#define PWM3T1    (*(unsigned int volatile xdata *)0xff30)
#define PWM3T2    (*(unsigned int volatile xdata *)0xff32)
#define PWM3CR    (*(unsigned char volatile xdata *)0xff34)
#define PWM3HLD   (*(unsigned char volatile xdata *)0xff35)
#define PWM4T1    (*(unsigned int volatile xdata *)0xff40)
```

```
#define    PWM4T2      (*(unsigned int volatile xdata *)0xff42)
#define    PWM4CR      (*(unsigned char volatile xdata *)0xff44)
#define    PWM4HLD     (*(unsigned char volatile xdata *)0xff45)
#define    PWM5T1      (*(unsigned int volatile xdata *)0xff50)
#define    PWM5T2      (*(unsigned int volatile xdata *)0xff52)
#define    PWM5CR      (*(unsigned char volatile xdata *)0xff54)
#define    PWM5HLD     (*(unsigned char volatile xdata *)0xff55)
#define    PWM6T1      (*(unsigned int volatile xdata *)0xff60)
#define    PWM6T2      (*(unsigned int volatile xdata *)0xff62)
#define    PWM6CR      (*(unsigned char volatile xdata *)0xff64)
#define    PWM6HLD     (*(unsigned char volatile xdata *)0xff65)
#define    PWM7T1      (*(unsigned int volatile xdata *)0xff70)
#define    PWM7T2      (*(unsigned int volatile xdata *)0xff72)
#define    PWM7CR      (*(unsigned char volatile xdata *)0xff74)
#define    PWM7HLD     (*(unsigned char volatile xdata *)0xff75)

void main()
{
    P_SW2 = 0x80;
    PWMCKS = 0x00;          // The PWM clock is a system clock
      PWMC = 0x1000;        //Set the PWM Period to 1000H PWM Clocks
    PWM0T1= 0x0100;         //Output low level at count value of 100H
    PWM0T2= 0x0500;         //Output a high level at a count value of 500H
    PWM0CR= 0x80;           //Enable PWM0 output
    P_SW2 = 0x00;

    PWMCR = 0x80;           //Start the PWM module

    while (1);
}
```

19.2.2 Two PWMs Complementary Symmetric Waveform with Dead-time Control

Assembly code

```
;The test operating frequency is 11.0592MHz

P_SW2       DATA    0BAH

PWMCFG      DATA    0F1H
PWMIF       DATA    0F6H
PWMFDCR     DATA    0F7H
PWMCR       DATA    0FEH
PWMCH       XDATA   0FFF0H
PWMCL       XDATA   0FFF1H
PWMCKS      XDATA   0FFF2H
TADCPH      XDATA   0FFF3H
TADCPL      XDATA   0FFF4H
PWM0T1H     XDATA   0FF00H
PWM0T1L     XDATA   0FF01H
PWM0T2H     XDATA   0FF02H
PWM0T2L     XDATA   0FF03H
PWM0CR      XDATA   0FF04H
PWM0HLD     XDATA   0FF05H
```

```
PWM1T1H     XDATA     0FF10H
PWM1T1L     XDATA     0FF11H
PWM1T2H     XDATA     0FF12H
PWM1T2L     XDATA     0FF13H
PWM1CR      XDATA     0FF14H
PWM1HLD     XDATA     0FF15H
PWM2T1H     XDATA     0FF20H
PWM2T1L     XDATA     0FF21H
PWM2T2H     XDATA     0FF22H
PWM2T2L     XDATA     0FF23H
PWM2CR      XDATA     0FF24H
PWM2HLD     XDATA     0FF25H
PWM3T1H     XDATA     0FF30H
PWM3T1L     XDATA     0FF31H
PWM3T2H     XDATA     0FF32H
PWM3T2L     XDATA     0FF33H
PWM3CR      XDATA     0FF34H
PWM3HLD     XDATA     0FF35H
PWM4T1H     XDATA     0FF40H
PWM4T1L     XDATA     0FF41H
PWM4T2H     XDATA     0FF42H
PWM4T2L     XDATA     0FF43H
PWM4CR      XDATA     0FF44H
PWM4HLD     XDATA     0FF45H
PWM5T1H     XDATA     0FF50H
PWM5T1L     XDATA     0FF51H
PWM5T2H     XDATA     0FF52H
PWM5T2L     XDATA     0FF53H
PWM5CR      XDATA     0FF54H
PWM5HLD     XDATA     0FF55H
PWM6T1H     XDATA     0FF60H
PWM6T1L     XDATA     0FF61H
PWM6T2H     XDATA     0FF62H
PWM6T2L     XDATA     0FF63H
PWM6CR      XDATA     0FF64H
PWM6HLD     XDATA     0FF65H
PWM7T1H     XDATA     0FF70H
PWM7T1L     XDATA     0FF71H
PWM7T2H     XDATA     0FF72H
PWM7T2L     XDATA     0FF73H
PWM7CR      XDATA     0FF74H
PWM7HLD     XDATA     0FF75H

            ORG       0000H
            LJMP      MAIN

            ORG       0100H
MAIN:
            MOV       P_SW2,#80H
            CLR       A
            MOV       DPTR,#PWMCKS
            MOVX      @DPTR,A          ;The PWM clock is a system clock
            MOV       A,#08H
            MOV       DPTR,#PWMCH      ;Set the PWM period to 0800H PWM clocks
            MOVX      @DPTR,A
            MOV       A,#00H
            MOV       DPTR,#PWMCL
            MOVX      @DPTR,A
```

```
MOV     A,#01H
MOV     DPTR,#PWM0T1H       ;PWM0 outputs low level at count value 0100H
MOVX    @DPTR,A
MOV     A,#00H
MOV     DPTR,#PWM0T1L
MOVX    @DPTR,A
MOV     A,#07H
MOV     DPTR,#PWM0T2H       ;PWM0 outputs high level at count value 0700H
MOVX    @DPTR,A
MOV     A,#00H
MOV     DPTR,#PWM0T2L
MOVX    @DPTR,A
MOV     A,#00H
MOV     DPTR,#PWM1T2H       ;PWM1 outputs high level at count value 10080H
MOVX    @DPTR,A
MOV     A,#80H
MOV     DPTR,#PWM1T2L
MOVX    @DPTR,A
MOV     A,#07H
MOV     DPTR,#PWM1T1H       ;PWM1 outputs low level at count value 10080H
MOVX    @DPTR,A
MOV     A,#80H
MOV     DPTR,#PWM1T1L
MOVX    @DPTR,A
MOV     A,#080H
MOV     DPTR,#PWM0CR        ;Enable PWM0 output
MOVX    @DPTR,A
MOV     A,#80H
MOV     DPTR,#PWM1CR        ;Enable PWM1 output
MOVX    @DPTR,A
MOV     P_SW2,#00H

MOV     PWMCR,#080H         ;Start the PWM module

JMP     $

END
```

C code

```
#include "reg51.h"
#include "intrins.h"

//The test operating frequency is 11.0592MHz

sfr     P_SW2       =   0xba;
sfr     PWMCFG      =   0xf1;
sfr     PWMIF       =   0xf6;
sfr     PWMFDCR     =   0xf7;
sfr     PWMCR       =   0xfe;

#define PWMC        (*(unsigned int volatile xdata *)0xfff0)
#define PWMCKS      (*(unsigned char volatile xdata *)0xfff2)
#define TADCP       (*(unsigned int volatile xdata *)0xfff3)
#define PWM0T1      (*(unsigned int volatile xdata *)0xff00)
#define PWM0T2      (*(unsigned int volatile xdata *)0xff02)
#define PWM0CR      (*(unsigned char volatile xdata *)0xff04)
#define PWM0HLD     (*(unsigned char volatile xdata *)0xff05)
```

```
#define    PWM1T1      (*(unsigned int volatile xdata *)0xff10)
#define    PWM1T2      (*(unsigned int volatile xdata *)0xff12)
#define    PWM1CR      (*(unsigned char volatile xdata *)0xff14)
#define    PWM1HLD     (*(unsigned char volatile xdata *)0xff15)
#define    PWM2T1      (*(unsigned int volatile xdata *)0xff20)
#define    PWM2T2      (*(unsigned int volatile xdata *)0xff22)
#define    PWM2CR      (*(unsigned char volatile xdata *)0xff24)
#define    PWM2HLD     (*(unsigned char volatile xdata *)0xff25)
#define    PWM3T1      (*(unsigned int volatile xdata *)0xff30)
#define    PWM3T2      (*(unsigned int volatile xdata *)0xff32)
#define    PWM3CR      (*(unsigned char volatile xdata *)0xff34)
#define    PWM3HLD     (*(unsigned char volatile xdata *)0xff35)
#define    PWM4T1      (*(unsigned int volatile xdata *)0xff40)
#define    PWM4T2      (*(unsigned int volatile xdata *)0xff42)
#define    PWM4CR      (*(unsigned char volatile xdata *)0xff44)
#define    PWM4HLD     (*(unsigned char volatile xdata *)0xff45)
#define    PWM5T1      (*(unsigned int volatile xdata *)0xff50)
#define    PWM5T2      (*(unsigned int volatile xdata *)0xff52)
#define    PWM5CR      (*(unsigned char volatile xdata *)0xff54)
#define    PWM5HLD     (*(unsigned char volatile xdata *)0xff55)
#define    PWM6T1      (*(unsigned int volatile xdata *)0xff60)
#define    PWM6T2      (*(unsigned int volatile xdata *)0xff62)
#define    PWM6CR      (*(unsigned char volatile xdata *)0xff64)
#define    PWM6HLD     (*(unsigned char volatile xdata *)0xff65)
#define    PWM7T1      (*(unsigned int volatile xdata *)0xff70)
#define    PWM7T2      (*(unsigned int volatile xdata *)0xff72)
#define    PWM7CR      (*(unsigned char volatile xdata *)0xff74)
#define    PWM7HLD     (*(unsigned char volatile xdata *)0xff75)

void main()
{
    P_SW2 = 0x80;
    PWMCKS = 0x00;          // The PWM clock is a system clock
    PWMC = 0x0800;          //Set the PWM period to 0800H PWM clocks
    PWM0T1= 0x0100;         /PWM0 outputs low level at count value 0100H
    PWM0T2= 0x0700;         //PWM0outputs high level at count value700H
    PWM1T2= 0x0080;         //PWM1 outputs high level at count value 0080H
    PWM1T1= 0x0780;         //PWM1 outputs low level at count value 0780H
    PWM0CR= 0x80;           //Enable PWM0 output
    PWM1CR= 0x80;           //Enable PWM1 output
    P_SW2 = 0x00;

    PWMCR = 0x80;           //Start the PWM module

    while (1);
}
```

19.2.3 PWM to achieve gradient light (breath light)

Assembly code

```
;The test operating frequency is 11.0592MHz

CYCLE       EQU     1000H

P_SW2       DATA    0BAH
```

PWMCFG	*DATA*	*0F1H*
PWMIF	*DATA*	*0F6H*
PWMFDCR	*DATA*	*0F7H*
PWMCR	*DATA*	*0FEH*
PWMCH	*XDATA*	*0FFF0H*
PWMCL	*XDATA*	*0FFF1H*
PWMCKS	*XDATA*	*0FFF2H*
TADCPH	*XDATA*	*0FFF3H*
TADCPL	*XDATA*	*0FFF4H*
PWM0T1H	*XDATA*	*0FF00H*
PWM0T1L	*XDATA*	*0FF01H*
PWM0T2H	*XDATA*	*0FF02H*
PWM0T2L	*XDATA*	*0FF03H*
PWM0CR	*XDATA*	*0FF04H*
PWM0HLD	*XDATA*	*0FF05H*
PWM1T1H	*XDATA*	*0FF10H*
PWM1T1L	*XDATA*	*0FF11H*
PWM1T2H	*XDATA*	*0FF12H*
PWM1T2L	*XDATA*	*0FF13H*
PWM1CR	*XDATA*	*0FF14H*
PWM1HLD	*XDATA*	*0FF15H*
PWM2T1H	*XDATA*	*0FF20H*
PWM2T1L	*XDATA*	*0FF21H*
PWM2T2H	*XDATA*	*0FF22H*
PWM2T2L	*XDATA*	*0FF23H*
PWM2CR	*XDATA*	*0FF24H*
PWM2HLD	*XDATA*	*0FF25H*
PWM3T1H	*XDATA*	*0FF30H*
PWM3T1L	*XDATA*	*0FF31H*
PWM3T2H	*XDATA*	*0FF32H*
PWM3T2L	*XDATA*	*0FF33H*
PWM3CR	*XDATA*	*0FF34H*
PWM3HLD	*XDATA*	*0FF35H*
PWM4T1H	*XDATA*	*0FF40H*
PWM4T1L	*XDATA*	*0FF41H*
PWM4T2H	*XDATA*	*0FF42H*
PWM4T2L	*XDATA*	*0FF43H*
PWM4CR	*XDATA*	*0FF44H*
PWM4HLD	*XDATA*	*0FF45H*
PWM5T1H	*XDATA*	*0FF50H*
PWM5T1L	*XDATA*	*0FF51H*
PWM5T2H	*XDATA*	*0FF52H*
PWM5T2L	*XDATA*	*0FF53H*
PWM5CR	*XDATA*	*0FF54H*
PWM5HLD	*XDATA*	*0FF55H*
PWM6T1H	*XDATA*	*0FF60H*
PWM6T1L	*XDATA*	*0FF61H*
PWM6T2H	*XDATA*	*0FF62H*
PWM6T2L	*XDATA*	*0FF63H*
PWM6CR	*XDATA*	*0FF64H*
PWM6HLD	*XDATA*	*0FF65H*
PWM7T1H	*XDATA*	*0FF70H*
PWM7T1L	*XDATA*	*0FF71H*
PWM7T2H	*XDATA*	*0FF72H*
PWM7T2L	*XDATA*	*0FF73H*
PWM7CR	*XDATA*	*0FF74H*
PWM7HLD	*XDATA*	*0FF75H*

STC MCU

```
DIR         BIT     20H.0
VALL        DATA    21H
VALH        DATA    22H

            ORG     0000H
            LJMP    MAIN
            ORG     00B3H
            LJMP    PWMISR

            ORG     0100H
PWMISR:
            PUSH    ACC
            PUSH    PSW
            PUSH    DPL
            PUSH    DPH
            PUSH    P_SW2

            MOV     P_SW2,#80H
            MOV     A,PWMCFG
            JNB     ACC.7,ISREXIT
            ANL     PWMCFG,#NOT 80H         ;Clear interrupt flag
            JNB     DIR,PWMDN
PWMUP:
            MOV     A,VALL
            ADD     A,#1
            MOV     VALL,A
            MOV     A,VALH
            ADDC    A,#0
            MOV     VALH,A
            CJNE    A,#HIGH CYCLE,SETPWM
            MOV     A,VALL
            CJNE    A,#LOW CYCLE,SETPWM
            CLR     DIR
            JMP     SETPWM
PWMDN:
            MOV     A,VALL
            ADD     A,#0FFH
            MOV     VALL,A
            MOV     A,VALH
            ADDC    A,#0FFH
            MOV     VALH,A
            JNZ     SETPWM
            MOV     A,VALL
            CJNE    A,#1,SETPWM
            SETB    DIR
SETPWM:
            MOV     A,VALH
            MOV     DPTR,#PWM0T2H
            MOVX    @DPTR,A
            MOV     A,VALL
            MOV     DPTR,#PWM0T2L
            MOVX    @DPTR,A
ISREXIT:
            POP     P_SW2
            POP     DPH
            POP     DPL
            POP     PSW
            POP     ACC
```

```
        RETI

MAIN:
        MOV     SP,#3FH

        SETB    DIR
        MOV     VALH,#00H
        MOV     VALL,#01H

        MOV     P_SW2,#80H
        CLR     A
        MOV     DPTR,#PWMCKS
        MOVX    @DPTR,A             ;The PWM clock is a system clock
        MOV     A,#HIGH CYCLE
        MOV     DPTR,#PWMCH         ;Set the PWM period
        MOVX    @DPTR,A
        MOV     A,#LOW CYCLE
        MOV     DPTR,#PWMCL
        MOVX    @DPTR,A
        MOV     A,#00H
        MOV     DPTR,#PWM0T1H
        MOVX    @DPTR,A
        MOV     A,#00H
        MOV     DPTR,#PWM0T1L
        MOVX    @DPTR,A
        MOV     A,VALH
        MOV     DPTR,#PWM0T2H
        MOVX    @DPTR,A
        MOV     A,VALL
        MOV     DPTR,#PWM0T2L
        MOVX    @DPTR,A
        MOV     A,#80H
        MOV     DPTR,#PWM0CR        ;Enable PWM0 output
        MOVX    @DPTR,A
        MOV     P_SW2,#00H

        MOV     PWMCR,#0C0H         ;Start the PWM module and enable PWM interrupts
        SETB    EA
        JMP     $

        END
```

C code

```
#include "reg51.h"
#include "intrins.h"

//The test operating frequency is 11.0592MHz

#define     CYCLE           0x1000

sfr         P_SW2       =   0xba;
sfr         PWMCFG      =   0xf1;
sfr         PWMIF       =   0xf6;
sfr         PWMFDCR     =   0xf7;
sfr         PWMCR       =   0xfe;

#define     PWMC            (*(unsigned int volatile xdata *)0xfff0)
```

```
#define     PWMCKS          (*(unsigned char volatile xdata *)0xfff2)
#define     TADCP           (*(unsigned int volatile xdata *)0xfff3)
#define     PWM0T1          (*(unsigned int volatile xdata *)0xff00)
#define     PWM0T2          (*(unsigned int volatile xdata *)0xff02)
#define     PWM0CR          (*(unsigned char volatile xdata *)0xff04)
#define     PWM0HLD         (*(unsigned char volatile xdata *)0xff05)
#define     PWM1T1          (*(unsigned int volatile xdata *)0xff10)
#define     PWM1T2          (*(unsigned int volatile xdata *)0xff12)
#define     PWM1CR          (*(unsigned char volatile xdata *)0xff14)
#define     PWM1HLD         (*(unsigned char volatile xdata *)0xff15)
#define     PWM2T1          (*(unsigned int volatile xdata *)0xff20)
#define     PWM2T2          (*(unsigned int volatile xdata *)0xff22)
#define     PWM2CR          (*(unsigned char volatile xdata *)0xff24)
#define     PWM2HLD         (*(unsigned char volatile xdata *)0xff25)
#define     PWM3T1          (*(unsigned int volatile xdata *)0xff30)
#define     PWM3T2          (*(unsigned int volatile xdata *)0xff32)
#define     PWM3CR          (*(unsigned char volatile xdata *)0xff34)
#define     PWM3HLD         (*(unsigned char volatile xdata *)0xff35)
#define     PWM4T1          (*(unsigned int volatile xdata *)0xff40)
#define     PWM4T2          (*(unsigned int volatile xdata *)0xff42)
#define     PWM4CR          (*(unsigned char volatile xdata *)0xff44)
#define     PWM4HLD         (*(unsigned char volatile xdata *)0xff45)
#define     PWM5T1          (*(unsigned int volatile xdata *)0xff50)
#define     PWM5T2          (*(unsigned int volatile xdata *)0xff52)
#define     PWM5CR          (*(unsigned char volatile xdata *)0xff54)
#define     PWM5HLD         (*(unsigned char volatile xdata *)0xff55)
#define     PWM6T1          (*(unsigned int volatile xdata *)0xff60)
#define     PWM6T2          (*(unsigned int volatile xdata *)0xff62)
#define     PWM6CR          (*(unsigned char volatile xdata *)0xff64)
#define     PWM6HLD         (*(unsigned char volatile xdata *)0xff65)
#define     PWM7T1          (*(unsigned int volatile xdata *)0xff70)
#define     PWM7T2          (*(unsigned int volatile xdata *)0xff72)
#define     PWM7CR          (*(unsigned char volatile xdata *)0xff74)
#define     PWM7HLD         (*(unsigned char volatile xdata *)0xff75)

void PWM_Isr() interrupt 22
{
    static bit dir = 1;
    static int val = 0;

    if (PWMCFG & 0x80)
    {
        PWMCFG &= ~0x80;            //Clear interrupt flag
        if (dir)
        {
            val++;
            if (val >= CYCLE) dir = 0;
        }
        else
        {
            val--;
            if (val <= 1) dir = 1;
        }
        _push_(P_SW2);
        P_SW2 |= 0x80;
        PWM0T2 = val;
        _pop_(P_SW2);
    }
```

```
}

void main()
{
    P_SW2 = 0x80;
    PWMCKS = 0x00;          //The PWM clock is a system clock
    PWMC = CYCLE;           //Set the PWM period
    PWM0T1= 0x0000;
    PWM0T2= 0x0001;
    PWM0CR= 0x80;           //Enable PWM0 output
    P_SW2 = 0x00;

    PWMCR = 0xc0;           //Start the PWM module
    EA = 1;

    while (1);
}
```

STC MCU

20 Sysnchronous Serial Peripheral Interface (SPI)

A high-speed serial communication interface - SPI is integrated in STC8F family of microcontrollers. SPI is a full-duplex high-speed synchronous communication bus. SPI interface integrated in the STC8F family of microcontrollers offers two operation modes: master mode and slave mode.

20.1 SPI Related Registers

Symbol	Description	Address	Bit Address and Symbol								Value after reset
			B7	B6	B5	B4	B3	B2	B1	B0	
SPSTAT	SPI Status Register	CDH	SPIF	WCOL	-	-	-	-	-	-	00xx,xxxx
SPCTL	SPI Control Register	CEH	SSIG	SPEN	DORD	MSTR	CPOL	CPHA	SPR[1:0]		0000,0100
SPDAT	SPI Data Register	CFH									0000,0000

SPI Status Register

Symbol	Address	B7	B6	B5	B4	B3	B2	B1	B0
SPSTAT	CDH	SPIF	WCOL	-	-	-	-	-	-

SPIF: SPI transfer completion flag.

When SPI completes sending / receiving 1 byte of data, the hardware will automatically set this bit and request interrupt to CPU. When the SSIG bit is set to 0, this flag will also be automatically set by hardware to indicate a mode change of device when the master / slave mode of the device changes due to changes in the SS pin level.

Note: This bit must be cleared using software writing 1 to it.

WCOL: SPI write collision flag bit.

This bit is set by hardware when the SPI is writing to the SPDAT register during data transfer.

Note: This bit must be cleared using software by writing 1 to it.

SPI Control Register

Symbol	Address	B7	B6	B5	B4	B3	B2	B1	B0
SPCTL	CEH	SSIG	SPEN	DORD	MSTR	CPOL	CPHA	SPR[1:0]	

SSIG: Control bit of whether SS pin is ignored or not.

0: the SS pin decides whether the device is a master or slave.

1: the function of SS pin is ignored. MSTR decides whether the device is a master or slave.

SPEN: SPI enable bit.

0: the SPI is disabled.

1: the SPI is enabled.

DORD: Set the transmitted or received SPI data order.

0: The MSB of the data is transmitted first.

1: The LSB of the data is transmitted first.

MSTR: Master/Slave mode select bit.

To set the mastert mode:

If SSIG = 0, the SS pin must be high and set MSTR to 1.

If SSIG = 1, it only needs to set MSTR to 1 (ignoring the SS pin level).

To set the slave mode:

If SSIG = 0, the SS pin must be low (regardless of the MSTR bit).

If SSIG = 1, it only needs to set MSTR to 0 (ignoring the SS pin level).

CPOL: SPI clock polarity select bit.

0: SCLK is low when idle. The leading edge of SCLK is the rising edge and the trailing edge is the falling edge.

1: SCLK is high when idle. The leading edge of SCLK is the falling edge and the trailing edge is the rising edge.

CPHA: SPI clock phase select bit.

0: The first bit of datum is driven when SS pin is low. The datum changes on the trailing edge of SPICLK and is sampled on the leading edge of SPICLK. (SSIG must be 0.)

1: The datum is driven on the leading edge of SPICLK, and is sampled on the trailing edge.

SPR[1:0]: SPI clock frequency select bits

SPR[1:0]	SCLK frequency
00	SYSclk/4
01	SYSclk/8
10	SYSclk/16
11	SYSclk/32

SPI Data Register

Symbol	Address	B7	B6	B5	B4	B3	B2	B1	B0
SPDAT	CFH								

The SPDAT holds the data to be transmitted or the data received.

20.2 SPI Communication Modes

There are three SPI communication modes: single master and single slave mode, dual devices configuration mode(both can be a master or slave), single master and multiple slaves mode.

20.2.1 Single Master and Single Slave Mode

Two devices are connected, one of which is fixed as a master and the other as a slave.

Master settings: SSIG set to 1, MSTR set to 1, fixed to be master mode. The master can use any port to connect the slave SS pin, pull down the slave SS pin to enable the slave.

Slave settings: SSIG is set to 0, SS pin as the chip select signal of the slave.

Single master single slave connection configuration diagram is shown as follows:

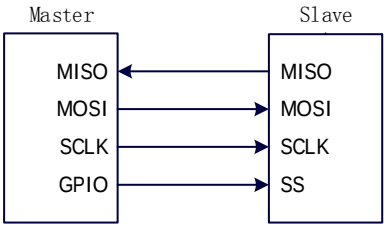

single master and single slave mode

20.2.2 Dual Devices Configuration Mode

Two devices are connected, the master and the slave are not fixed.

Setting Method 1: Both devices are initialized with SSIG set to 0, MSTR set to 1, and SS pin set to bi-directional mode and output high. Now the both devices are in master mode with not ignoring SS. When one of the devices needs to initiate a transfer, set its own SS pin to output mode and output low to pull down the other device's SS pin so that the other device is forcibly set to slave mode.

Set Method 2: Both devices are initialized as slave mode with ignoring SS, where SIG is set to 1 and MSTR is set to 0. When one of the devices needs to initiate a transfer, detect the SS pin's level firstly. If SS is high, the device sets itself to master mode with ignoring SS, then starts the data transfer.

The connection configuration of dual devices configuration mode is shown as follows:

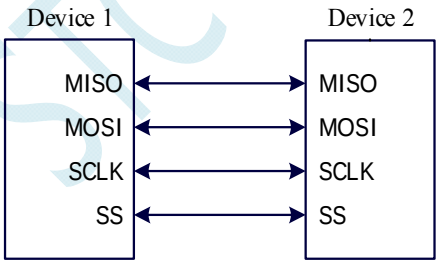

The connection configuration of dual devices configuration mode

20.2.3 Single Master and Multiple Slaves Mode

Multiple devices are connected, one of which is fixed as a master and others are fixed as slaves.

Master settings: SSIG set to 1, MSTR set to 1, fixed to master mode. The master can use any port to connect with the SS pins of each slave respectively, and pull down the SS pin of one slave to enable the corresponding slave device.

Slave settings: SSIG is set to 0, SS pin is used as the chip select signal of the slave.

The configuration diagram of single master multiple slaves is as follows:

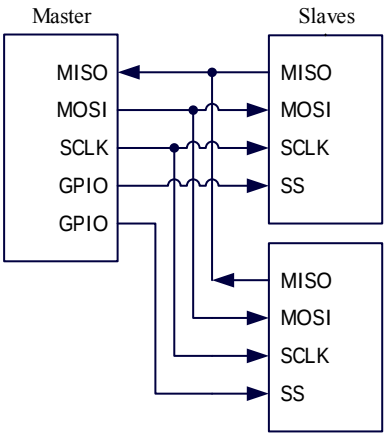

The configuration diagram of single master multiple slaves

20.3 SPI Configuration

Control bits			Communication port pins				Descriptions
SPEN	SSIG	MSTR	SS	MISO	MOSI	SCLK	
0	x	x	x	input	input	input	SPI is disabled, SS/MOSI/MISO/SCLK are used as general I/O ports
1	0	0	0	output	input	input	**Selected as slave**
1	0	0	1	High impedance	input	input	**Selected as slave,** not selected.
1	0	1→0	0	output	input	input	**Slave mode**, master mode with not ignoring SS and MSTR is 1. When SS pin is pulled low, MSTR will be automatically cleared by hardware and the operating mode will be passively set to slave mode.
1	0	1	1	input	High impedance	High impedance	**Master mode,** idle state
					output	output	**Master mode, active state**
1	1	0	x	output	input	input	**Slave mode**
1	1	1	x	input	output	output	**Master mode**

Additional Considerations for a Slave

When CPHA = 0, SSIG must be 0 (ie SS pin can not be ignored). The SS pin must be pulled low before each serial byte begins transfer and must be reset to high after the transfer has completed. The SPDAT register can not be written while the SS pin is low, otherwise a write collision error will occurs. Operation with CPHA = 0 and SSIG = 1 is undefined.

When CPHA = 1, SSIG may be set to 1 (ie, the SS pin can be ignored). If SSIG = 0, the SS pin may remain active low (ie, stay low all the way) for consecutive transfers. This method is suitable for fixed single

master single slave system.

Additional Considerations for a Master

In SPI, transfers are always initiated by the master. If the SPI is enabled (SPEN = 1) and selected as the master, the master will initiate a SPI clock generator and data transfer by writing to the SPI data register, SPDAT. The data will appear on the MOSI pin a half to one SPI bit-time later after the data is written to SPDAT. The data written to the SPDAT register of the master is shifted out from the MOSI pin and sent to the MOSI pin of the slave. And, at the same time the data in SPDAT register of the selected slave is shifted out on MISO pin to the MISO pin of the master.

After one byte has been transmitted, the SPI clock generator is stopped, the transfer completion flag (SPIF) is set, and an SPI interrupt is generated if the SPI interrupt is enabled. The two shift registers for the master and slave CPUs can be considered as a 16-bit cyclic shift register. As data is shifted from the master to the slave, data is also shifted in the opposite direction simultaneously. This means that the data of the master and the slave are exchanged with each other in one shift cycle.

Mode Change on SS pin

If SPEN = 1, SSIG = 0 and MSTR = 1, the SPI is enabled in master mode and the SS pin can be configured for input mode or quasi-bidirectional port mode. In this case, another master can drive this pin low to select the device as an SPI slave and send data to it. To avoid bus contention, the SPI system clears the slave's MSTR, forces MOSI and SCLK to be input mode, and MISO changes to output mode. The SPIF flag in SPSTAT is set, and if the SPI interrupt is enabled, an SPI interrupt will occur.

The user software must always detect the MSTR bit. If this bit is cleared by a slave selection action and the user wants to continue using the SPI as a master, the MSTR bit must be set again, otherwise it will remain in slave mode.

Write Collision

The SPI is single buffered in the transmit direction and double buffered in the receive direction. New data for transmission can not be written to the shift register until the previous transmission is complete. The WCOL bit will be set to indicate that a data write collision error has occurred when the data register SPDAT is written during transmission. In this case, the data currently being transmitted will continue to be transmitted, and the newly written data will be lost.

A write collision condition on the master is rare when write collision detection is performed on a master or slave because the master has full control of the data transfer. However, a write collision may occur on the slave because the slave can not control it when the master initiates the transfer.

When receiving data, the received data is transferred to a parallel read data buffer, which will release the shift register for the next data reception. However, the received data must be read from the data register before the next character is completely shifted in. Otherwise, the previous received data will be lost.

WCOL can be cleared by software by writing "1" to it.

20.4 Data Pattern

The clock phase control bit, CPHA, of the SPI allows the user to set the clock edge when the data is sampled and changed. The clock polarity bit CPOL allows the user to set the clock polarity. The following illustrations show the SPI communication timing under different clock phases and polarity settings.

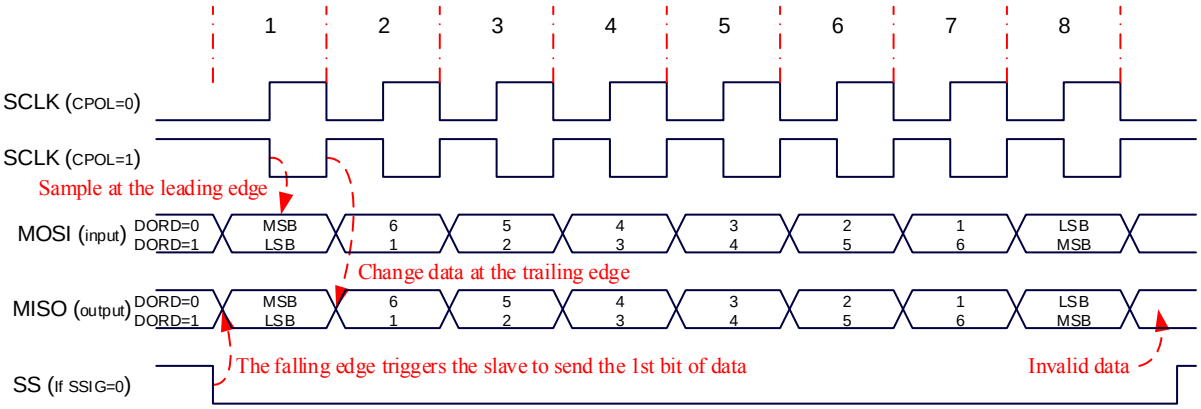

SPI slave transfer format with CPHA=0

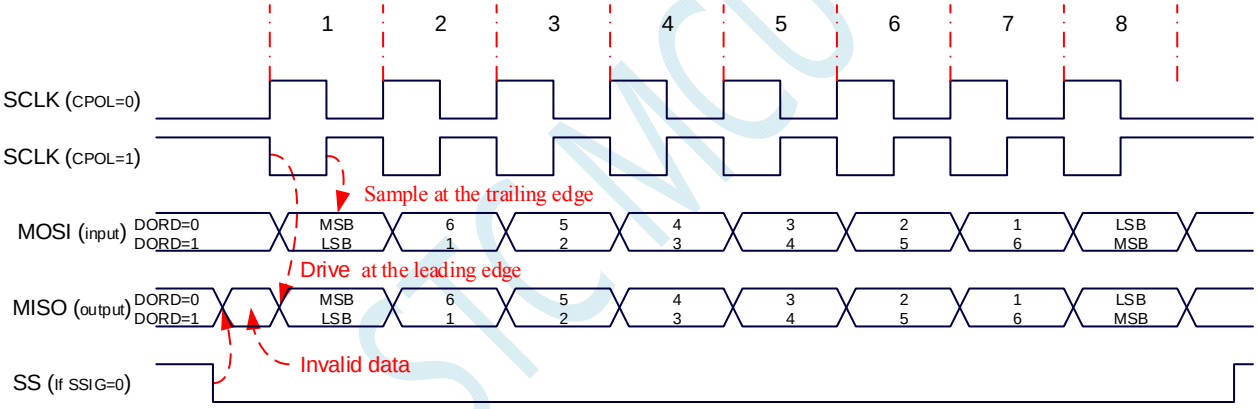

SPI slave transfer format with CPHA=1

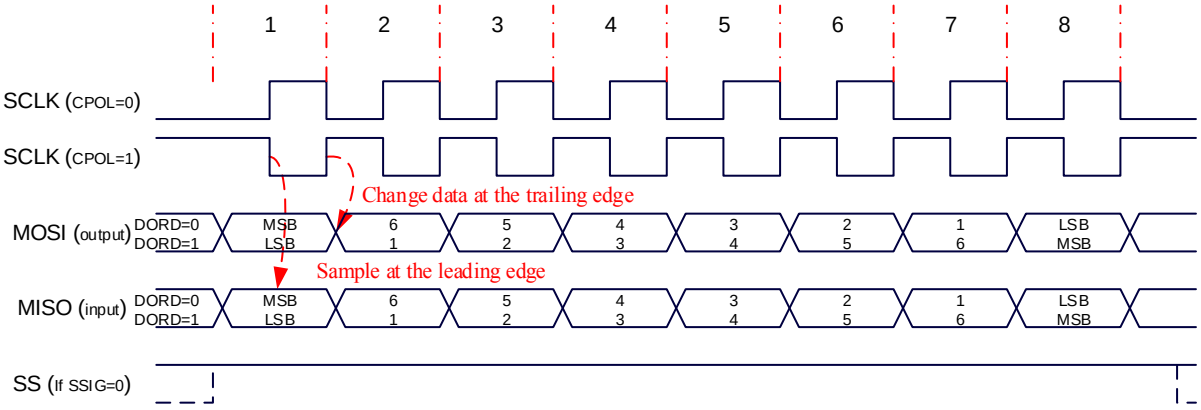

SPI master transfer format with CPHA=0

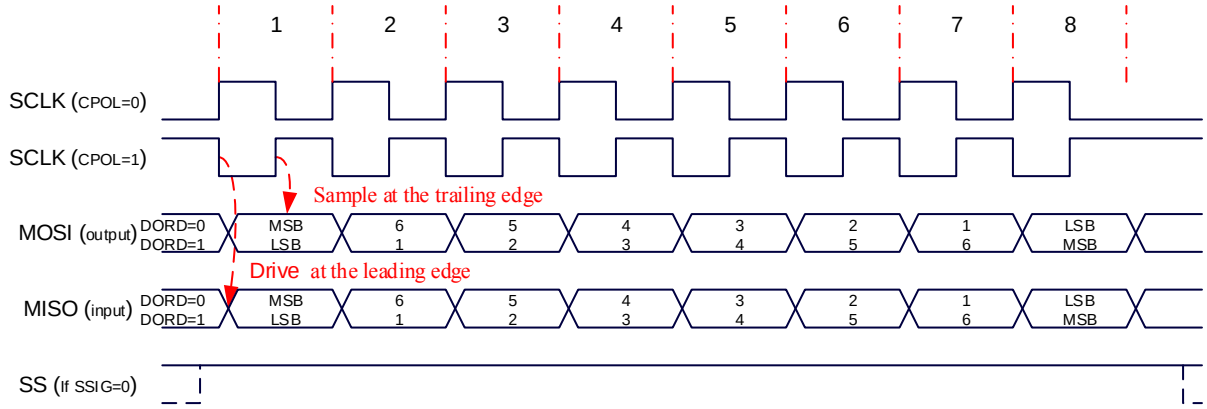

SPI master transfer format with CPHA=1

20.5 Sample program

20.5.1 SPI Single Master and Single Slave System host program(interrupt mode)

Assembly code

```
SPSTAT      DATA    0CDH
SPCTL       DATA    0CEH
SPDAT       DATA    0CFH
IE2         DATA    0AFH
ESPI        EQU     02H

BUSY        BIT     20H.0
SS          BIT     P1.0
LED         BIT     P1.1

            ORG     0000H
            LJMP    MAIN
            ORG     004BH
            LJMP    SPIISR

            ORG     0100H
SPIISR:
            MOV     SPSTAT,#0C0H        ;Clear interrupt flag
            SETB    SS                  ;pull up SS pin of slave
            CLR     BUSY
            CPL     LED
            RETI

MAIN:
            MOV     SP,#3FH

            SETB    LED
            SETB    SS
            CLR     BUSY

            MOV     SPCTL,#50H          ;Enable SPI master mode
            MOV     SPSTAT,#0C0H        ;Clear interrupt flag
            MOV     IE2,#ESPI           ;Enable SPI interrupt
```

```
                SETB    EA

LOOP:
                JB      BUSY,$
                SETB    BUSY
                CLR     SS              ;Pull down SS pin of slave
                MOV     SPDAT,#5AH      ;Send test data
                JMP     LOOP

                END
```

C code

```
#include "reg51.h"
#include "intrins.h"

sfr     SPSTAT  =   0xcd;
sfr     SPCTL   =   0xce;
sfr     SPDAT   =   0xcf;
sfr     IE2     =   0xaf;
#define ESPI        0x02

sbit    SS      =   P1^0;
sbit    LED     =   P1^1;

bit     busy;

void SPI_Isr() interrupt 9
{
    SPSTAT = 0xc0;          //Clear interrupt flag
    SS = 1;                 //pull up SS pin of slave
    busy = 0;
    LED = !LED;             //Test port
}

void main()
{
    LED = 1;
    SS = 1;
    busy = 0;

    SPCTL = 0x50;           //Enable SPI master mode
    SPSTAT = 0xc0;          //Clear interrupt flag
    IE2 = ESPI;             //Enable SPI interrupt
    EA = 1;

    while (1)
    {
        while (busy);
        busy = 1;
        SS = 0;             //Pull down SS pin of slave
        SPDAT = 0x5a;       //Send test data
    }
}
```

20.5.2 SPI Single Master and Single Slave System slave program(Single Master and Single Slave)

Assembly code

```
SPSTAT      DATA    0CDH
SPCTL       DATA    0CEH
SPDAT       DATA    0CFH
IE2         DATA    0AFH
ESPI        EQU     02H

LED         BIT     P1.1

            ORG     0000H
            LJMP    MAIN
            ORG     004BH
            LJMP    SPIISR

            ORG     0100H
SPIISR:
            MOV     SPSTAT,#0C0H        ;Clear interrupt flag
            MOV     SPDAT,SPDAT         ;Sending the received data back to the host
            CPL     LED
            RETI

MAIN:
            MOV     SP,#3FH

            MOV     SPCTL,#40H          ;Enable SPI slave mode
            MOV     SPSTAT,#0C0H        ;Clear interrupt flag
            MOV     IE2,#ESPI           ;Enable SPI interrupt
            SETB    EA

            JMP     $

            END
```

C code

```
#include "reg51.h"
#include "intrins.h"

sfr     SPSTAT      =   0xcd;
sfr     SPCTL       =   0xce;
sfr     SPDAT       =   0xcf;
sfr     IE2         =   0xaf;
#define ESPI            0x02

sbit    LED         =   P1^1;

void SPI_Isr() interrupt 9
{
    SPSTAT = 0xc0;          //Clear interrupt flag
    SPDAT = SPDAT;          //Sending the received data back to the host
    LED = !LED;             //Test port
}
```

```
void main()
{
    SPCTL = 0x40;           //Enable SPI slave mode
    SPSTAT = 0xc0;          //Clear interrupt flag
    IE2 = ESPI;             //Enable SPI interrupt
    EA = 1;

    while (1);
}
```

20.5.3 SPI Single Master and Single Slave System host program(Query mode)

Assembly code

```
SPSTAT      DATA    0CDH
SPCTL       DATA    0CEH
SPDAT       DATA    0CFH
IE2         DATA    0AFH
ESPI        EQU     02H

SS          BIT     P1.0
LED         BIT     P1.1

            ORG     0000H
            LJMP    MAIN

            ORG     0100H
MAIN:
            MOV     SP,#3FH

            SETB    LED
            SETB    SS

            MOV     SPCTL,#50H          ;Enable SPI master mode
            MOV     SPSTAT,#0C0H        ;Clear interrupt flag

LOOP:
            CLR     SS                  ;Pull down SS pin of slave
            MOV     SPDAT,#5AH          ;Send test data
            MOV     A,SPSTAT            ;Query completion flag
            JNB     ACC.7,$-2
            MOV     SPSTAT,#0C0H        ;Clear interrupt flag
            SETB    SS
            CPL     LED
            JMP     LOOP

            END
```

C code

```
#include "reg51.h"
#include "intrins.h"
```

```
sfr     SPSTAT    =   0xcd;
sfr     SPCTL     =   0xce;
sfr     SPDAT     =   0xcf;
sfr     IE2       =   0xaf;
#define ESPI          0x02

sbit    SS        =   P1^0;
sbit    LED       =   P1^1;

void main()
{
    LED = 1;
    SS = 1;

    SPCTL = 0x50;                   //Enable SPI master mode
    SPSTAT = 0xc0;                  //Clear interrupt flag

    while (1)
    {
        SS = 0;                     //Pull down SS pin of slave
        SPDAT = 0x5a;               //Send test data
        while (!(SPSTAT & 0x80));   //Query completion flag
        SPSTAT = 0xc0;              //Clear interrupt flag
        SS = 1;                     //pull up SS pin of slav
        LED = !LED;                 //Test port
    }
}
```

20.5.4 SPI Single Master and Single Slave System host program(Query mode)

Assembly code

```
SPSTAT      DATA    0CDH
SPCTL       DATA    0CEH
SPDAT       DATA    0CFH
IE2         DATA    0AFH
ESPI        EQU     02H

LED         BIT     P1.1

            ORG     0000H
            LJMP    MAIN

            ORG     0100H
MAIN:
            MOV     SP,#3FH

            MOV     SPCTL,#40H          ;Enable SPI slave mode
            MOV     SPSTAT,#0C0H        ;Clear interrupt flag

LOOP:
            MOV     A,SPSTAT            ;Query completion flag
            JNB     ACC.7,$-2
            MOV     SPSTAT,#0C0H        ;Clear interrupt flag
```

```
        MOV     SPDAT,SPDAT     ;Sending the received data back to the host
        CPL     LED
        JMP     LOOP

        END
```

C code

```
#include "reg51.h"
#include "intrins.h"

sfr     SPSTAT  =   0xcd;
sfr     SPCTL   =   0xce;
sfr     SPDAT   =   0xcf;
sfr     IE2     =   0xaf;
#define ESPI        0x02

sbit    LED     =   P1^1;

void SPI_Isr() interrupt 9
{
    SPSTAT = 0xc0;              //Clear interrupt flag
}

void main()
{
    SPCTL = 0x40;               //Enable SPI slave mode
    SPSTAT = 0xc0;              //Clear interrupt flag

    while (1)
    {
        while (!(SPSTAT & 0x80));   //Query completion flag
        SPSTAT = 0xc0;              //Clear interrupt flag
        SPDAT = SPDAT;              //Sending the received data back to the host
        LED = !LED;                 //Test port
    }
}
```

20.5.5 SPI Mutual master-slave system program(interrupt mode)

Assembly code

```
SPSTAT      DATA    0CDH
SPCTL       DATA    0CEH
SPDAT       DATA    0CFH
IE2         DATA    0AFH
ESPI        EQU     02H

SS          BIT     P1.0
LED         BIT     P1.1
KEY         BIT     P0.0

            ORG     0000H
            LJMP    MAIN
```

```
                ORG     004BH
                LJMP    SPIISR

                ORG     0100H
SPIISR:
                PUSH    ACC
                MOV     SPSTAT,#0C0H        ;Clear interrupt flag
                MOV     A,SPCTL
                JB      ACC.4,MASTER
SLAVE:
                MOV     SPDAT,SPDAT         ;Sending the received data back to the hos
                JMP     ISREXIT
MASTER:
                SETB    SS                  ;Pull up the SS pin of the slave
                MOV     SPCTL,#40H          ;Reset to slave standby
ISREXIT:
                CPL     LED
                POP     ACC
                RETI

MAIN:
                MOV     SP,#3FH

                SETB    SS
                SETB    LED
                SETB    KEY

                MOV     SPCTL,#40H          ;Enable SPI slave mode to standby
                MOV     SPSTAT,#0C0H        ;Clear interrupt flag
                MOV     IE2,#ESPI           ;Enable SPI interrupt
                SETB    EA

LOOP:
                JB      KEY,LOOP            ;Waiting key trigger
                MOV     SPCTL,#50H          ;Enable SPI host mode
                CLR     SS                  ;Pull down the SS pin of slave
                MOV     SPDAT,#5AH          ;Send test data
                JNB     KEY,$               ;Waiting key releases
                JMP     LOOP

                END
```

C code

```
#include "reg51.h"
#include "intrins.h"

sfr     SPSTAT  =   0xcd;
sfr     SPCTL   =   0xce;
sfr     SPDAT   =   0xcf;
sfr     IE2     =   0xaf;
#define ESPI        0x02

sbit    SS      =   P1^0;
sbit    LED     =   P1^1;
sbit    KEY     =   P0^0;

void SPI_Isr() interrupt 9
```

```
{
    SPSTAT = 0xc0;              //Clear interrupt flag
    if (SPCTL & 0x10)
    {                           //Master mode
        SS = 1;                 //Pull up the SS pin of the slave
        SPCTL = 0x40;           //Reset to slave standby
    }
    else
    {                           //Slave mode
        SPDAT = SPDAT;          //Sending the received data back to the host
    }
    LED = !LED;                 //Test port
}

void main()
{
    LED = 1;
    KEY = 1;
    SS = 1;

    SPCTL = 0x40;               //Enable SPI slave mode to standby
    SPSTAT = 0xc0;              //Clear interrupt flag
    IE2 = ESPI;                 //Enable SPI interrupt
    EA = 1;

    while (1)
    {
        if (!KEY)               //Waiting key trigger
        {
            SPCTL = 0x50;       //Enable SPI host mode
            SS = 0;             //pull down the SS pin of slave
            SPDAT = 0x5a;       //Send test data
            while (!KEY);       //waiting key releases
        }
    }
}
```

20.5.6 SPI Mutual master-slave system program(Query mode)

Assembly code

```
SPSTAT      DATA    0CDH
SPCTL       DATA    0CEH
SPDAT       DATA    0CFH
IE2         DATA    0AFH
ESPI        EQU     02H

SS          BIT     P1.0
LED         BIT     P1.1
KEY         BIT     P0.0

            ORG     0000H
            LJMP    MAIN
```

```
                ORG     0100H
MAIN:
                MOV     SP,#3FH

                SETB    SS
                SETB    LED
                SETB    KEY

                MOV     SPCTL,#40H          ;Enable SPI slave mode to standby
                MOV     SPSTAT,#0C0H        ;Clear interrupt flag

LOOP:
                JB      KEY,SKIP            ;Waiting key trigger
                MOV     SPCTL,#50H          ;Enable SPI host mode
                CLR     SS                  ;pull down the SS pin of slave
                MOV     SPDAT,#5AH          ;Send test data
                JNB     KEY,$               ;waiting key releases
SKIP:
                MOV     A,SPSTAT
                JNB     ACC.7,LOOP
                MOV     SPSTAT,#0C0H        ;Clear interrupt flag
                MOV     A,SPCTL
                JB      ACC.4,MASTER
SLAVE:
                MOV     SPDAT,SPDAT         ;Sending the received data back to the host
                CPL     LED
                JMP     LOOP
MASTER:
                SETB    SS                  ;Pull up the SS pin of the slave
                MOV     SPCTL,#40H          ;Reset to slave standby
                CPL     LED
                JMP     LOOP

                END
```

C code

```
#include "reg51.h"
#include "intrins.h"

sfr     SPSTAT  =   0xcd;
sfr     SPCTL   =   0xce;
sfr     SPDAT   =   0xcf;
sfr     IE2     =   0xaf;
#define ESPI        0x02

sbit    SS      =   P1^0;
sbit    LED     =   P1^1;
sbit    KEY     =   P0^0;

void main()
{
    LED = 1;
    KEY = 1;
    SS = 1;

    SPCTL = 0x40;           //Enable SPI slave mode to standby
    SPSTAT = 0xc0;          //Clear interrupt flag
```

```
    while (1)
    {
        if (!KEY)                   //Waiting key trigger
        {
            SPCTL = 0x50;           //Enable SPI host mode
            SS = 0;                 //pull down the SS pin of slave
            SPDAT = 0x5a;           //Send test data
            while (!KEY);           //waiting key releases
        }
        if (SPSTAT & 0x80)
        {
            SPSTAT = 0xc0;          //Clear interrupt flag
            if (SPCTL & 0x10)
            {                       //Host mode
                SS = 1;             //Pull up the SS pin of the slave
                SPCTL = 0x40;       //Reset to slave standby
            }
            else
            {                       //Slave mode
                SPDAT = SPDAT;      //Sending the received data back to the host
            }
            LED = !LED;             //Test port
        }
    }
}
```

STC MCU

21 I²C Bus

An I2C serial bus controller is integrated in the STC8F family of microcontrollers. I2C is a high-speed synchronous communication bus, which uses SCL (clock line) and SDA (data line) to carry out two-wire synchronous communication. For port allocation of SCL and SDA, the STC8F family of microcontrollers provide a pin switchover mode that switches SCL and SDA to different I/O ports. So it is convenience to use a set of I2C as multiple sets of I2C buses through time sharing.

Compared with the standard I2C protocol, the following two mechanisms are ignored:

- No arbitration will be performed after the start signal (START) is sent.
- No timeout detection when the clock signal (SCL) stays at low level.

The I2C bus of the STC8F family microcontrollers offers two modes of operation: master mode (SCL is the output port, which is used to transmit synchronous clock signal) and slave mode (SCL is the input port, which is used to receive the synchronous clock signal).

21.1 I²C Related Registers

Symbol	Description	Address	Bit Address and Symbol								Value after reset
			B7	B6	B5	B4	B3	B2	B1	B0	
I2CCFG	I²C configuration register	FE80H	ENI2C	MSSL	MSSPEED[6:1]						0000,0000
I2CMSCR	I²C Master Control Register	FE81H	EMSI	-	-	-	MSCMD[3:0]				0xxx,0000
I2CMSST	I²C Master Status Register	FE82H	MSBUSY	MSIF	-	-	-	-	MSACKI	MSACKO	00xx,xx00
I2CSLCR	I²C Slave Control Register	FE83H	-	ESTAI	ERXI	ETXI	ESTOI	-	-	SLRST	x000,0xx0
I2CSLST	I²C Slave Status Register	FE84H	SLBUSY	STAIF	RXIF	TXIF	STOIF	TXING	SLACKI	SLACKO	0000,0000
I2CSLADR	I²C Slave Address Register	FE85H	SLADR[6:0]							MA	0000,0000
I2CTXD	I²C Data transmission register	FE86H									0000,0000
I2CRXD	I²C Data receive register	FE87H									0000,0000
I2CMSAUX	I²C Data receive register	FE88H	-	-	-	-	-	-	-	WDTA	xxxx,xxx0

21.2 I²C Master Mode

I²C configuration register

Symbol	Address	B7	B6	B5	B4	B3	B2	B1	B0
I2CCFG	FE80H	ENI2C	MSSL	MSSPEED[6:1]					

ENI2C: I²C function enable bit

0: disable I²C function

1: enable I²Cfunction

MSSL: I²C mode selection bit

0: Salve mode

1: Master mode

MSSPEED[6:1]: I²C bus speed control bits (clocks to wait)

MSSPEED[6:1]	Corresponding clocks
0	1
1	3
2	5
…	…
x	2x+1
…	…
62	125
63	127

The waiting parameter set by the MSSPEED is valid only when the I2C module is operating in the master mode. The waiting parameter is mainly used for the following signals in master mode:

T_{SSTA}: Setup Time of START

T_{HSTA}: Hold Time of START

T_{SSTO}: Setup Time of STOP

T_{HSTO}: Hold Time of STOP

T_{HCKL}: Hold Time of SCL Low

Note:

Due to the need to cooperate with the clock synchronization mechanism, the high-level hold time (THCKH) of the clock signal should be at least twice as long as the low-level hold time (THCKL) of the clock signal, and the exact length of THCKH depends on the pull-up speed of the SCL port.

The data retention time of SDA is fixed as 1 clock after the falling edge of SCL.

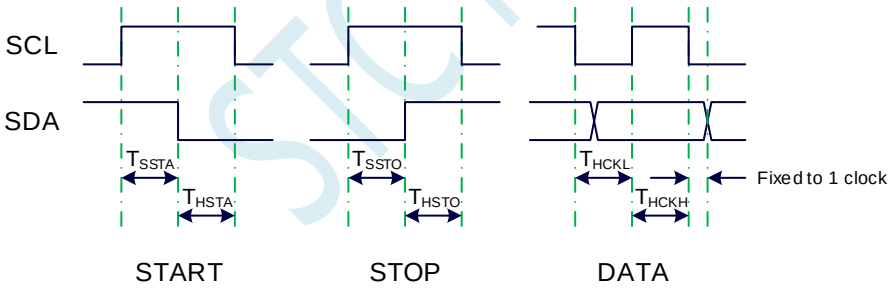

I²C master control register

Symbol	Address	B7	B6	B5	B4	B3	B2	B1	B0
I2CMSCR	FE81H	EMSI	-	-	-	-	MSCMD[2:0]		

EMSI: Master mode interrupt enable control bit

0: disable master mode interrupt

1: enable master mode interrupt

MSCMD[2:0]: master command bits

000: Standby, no action

001: START command

Send a START signal. If the I2C controller is in idle state currently, i.e. MSBUSY (I2CMSST.7) is 0, writing this command will make the controller enter the busy status, and the hardware will automatically set the MSBUSY status bit and start sending START signal. If the I2C controller is busy currently, writing this command is invalid. Sending the START signal waveform is shown

below:

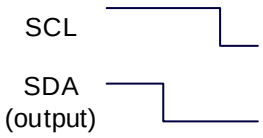

010: Sending data command.

After this command is written, the I2C bus controller generates eight clocks on the SCL pin and sends the datum in the I2CTXD register to the SDA pin bit by bit (MSB first). Sending data waveform is shown below:

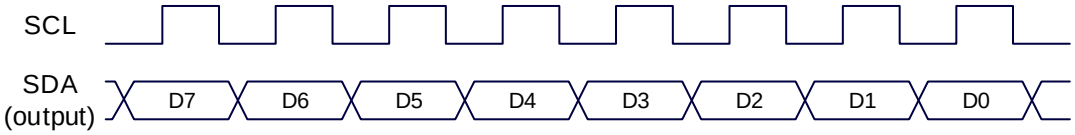

011: Receiving ACK command

After this command is written, the I2C bus controller generates a clock on the SCL pin and saves the datum read from the SDA port to MSACKI (I2CMSST.1). The waveform of receiving ACK is shown below:

100: Receiving data command

After this command is written, the I2C bus controller generates eight clocks on the SCL pin and shifts left the datum read from the SDA port to the I2CRXD register (MSB first). The waveform of receiving data is shown below:

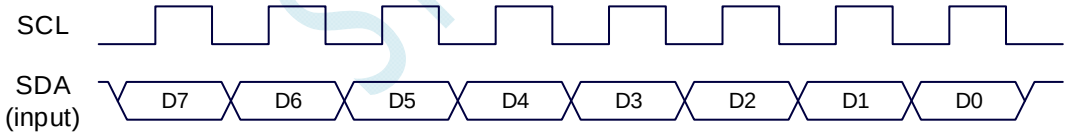

101: Sending ACK command

After writing this command, the I2C bus controller generates a clock on the SCL pin and sends the datum in MSACKO (I2CMSST.0) to SDA. Sending ACK waveform is shown below:

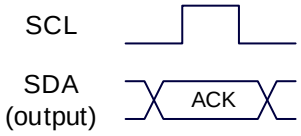

110: STOP command

Send STOP signal. After writing this command, the I2C bus controller begins to send a STOP signal. After the signal is sent, the MSBUSY status bit will be cleared by the hardware automatically. STOP signal waveform is shown below:

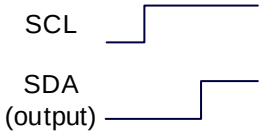

0111： Reserved.

1000： Reserved.

注：The following new expanded combination commands are only valid for STC8F2K64S4 Series C/D chips, STC8A8K64S4A12 Series E/F chips, STC8F2K64S2 Series C/D, and STC8A4K64S2A12 Series E/F chips.

1001：Start command + send data command + receive ACK command.

This command is a combination of command 0001, command 0010, and command 0011. After the command is executed, the controller executes these three commands in sequence.

1010：send data command + receive ACK command.

This command is the combination of the command 0010 and the command 0011. After the command is executed, the controller will execute the two commands in sequence.

1011：Receive data command + send ACK(0) command.

This command is a combination of the command 0100 and the command 0101. After the command is executed, the controller executes the two commands in sequence.

Note: The response signal returned by this command is fixed as ACK(0), which is not affected by the MSACKO bit.

1100：Receive data command + send NAK(1) command.

This command is a combination of the command 0100 and the command 0101. After the command is executed, the controller executes the two commands in sequence.

Note: The response signal returned by this command is fixed as ACK(1), which is not affected by the MSACKO bit.

I²C master auxiliary control register

Symbol	Address	B7	B6	B5	B4	B3	B2	B1	B0
I2CMSAUX	FE88H	-	-	-	-	-	-	-	WDTA

WDTA：I2C data automatic send enable bit in master module

0：Disable automatic sending

1：Enable automatic sending

If the automatic transmission function is enabled, when the MCU performs a write operation to the I2C TXD data register, the I2C controller will automatically trigger the "1010" command, ie, automatically send data and receive an ACK signal.

I²C master status register

Symbol	Address	B7	B6	B5	B4	B3	B2	B1	B0
I2CMSST	FE82H	MSBUSY	MSIF	-	-	-	-	MSACKI	MSACKO

MSBUSY: status bit of I2C controller in master mode. (Read-only)

0: the controller is in idle state.

1: the controller is in busy state.

When the I2C controller is in master mode, the controller will enter the busy state after sending the START signal in the idle state. The busy state will be maintained until the STOP signal is successfully transmitted, and the state will be restored to the idle state.

MSIF: master mode interrupt request bit (interrupt flag bit). After the interrupt signal is generated by the I2C controller in master mode, the hardware will automatically set this bit to 1 and request interrupt to CPU. After the interrupt is serviced, the MSIF bit must be cleared by software.

MSACKI: In master mode, it is the ACK datum received after sending the "011" command to the MSCMD bit in I2CMSCR.

MSACKO: In master mode, it is the ACK signal ready to be transmitted. When the "101" command is sent to the MSCMD bit of I2CMSCR, the controller will automatically read the datum of this bit and send it as ACK to SDA.

21.3 I²C Slave Mode

I²C slave control register

Symbol	Address	B7	B6	B5	B4	B3	B2	B1	B0
I2CSLCR	FE83H	-	ESTAI	ERXI	ETXI	ESTOI	-	-	SLRST

ESTAI: interrupt enable bit when receiving START signal in slave mode.

0: disable interrupt when receiving START signal in slave mode.

1: enable interrupt when receiving START signal in slave mode.

ERXI: Interrupt enable bit after 1 byte datum is received in Slave mode

0: disable interrupt after a datum is received in slave mode.

1: enable interrupt after 1 byte datum is reveived in slave mode.

ERXI: Interrupt enable bit after 1 byte datum is sent in Slave mode

0: disable interrupt after a datum is sent in slave mode.

1: enable interrupt after 1 byte datum is sent in slave mode.

ESTOI: interrupt enable bit after STOP signal is received in slave mode.

0: disable interrupt after STOP signal is received in slave mode.

1: enable interrupt after STOP signal is received in slave mode.

SLRST: reset slave mode

I²C slave status register

Symbol	Address	B7	B6	B5	B4	B3	B2	B1	B0
I2CSLST	FE84H	SLBUSY	STAIF	RXIF	TXIF	STOIF	-	SLACKI	SLACKO

SLBUSY: status bit of I2C controller in slave mode. (Read-only)

0: the controller is in idle state.

1: the controller is in busy state.

When the I2C controller is in slave mode, the controller will continue to detect the subsequent device address data when it receives the START signal from the master in idle state. If the device address matches the slave address set in the current I2CSLADR register, the controller will enter the busy state. The busy state will be maintained until receives a STOP signal sent by the master successfully, and then the state will be restored to idle state.

STAIF: Interrupt request bit after START signal is received in slave mode. After the I2C controller in slave mode receives the START signal, the hardware will automatically set this bit and request interrupt to CPU. The STAIF bit must be cleared by software after the interrupt is responded. The time point of STAIF being set is shown below:

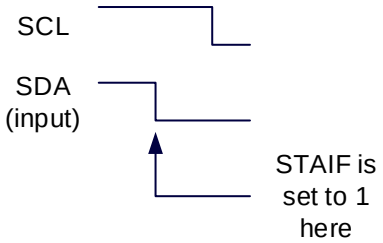

RXIF： Interrupt request bit after 1-byte datum is received in slave mode. After the I2C controller in slave mode receives a 1-byte datum, the hardware will automatically set this bit at the falling edge of the 8th clock and will request interrupt to CPU. The RXIF bit must be cleared by software after the interrupt is responded. The time point of RXIF being set is shown in the figure below:

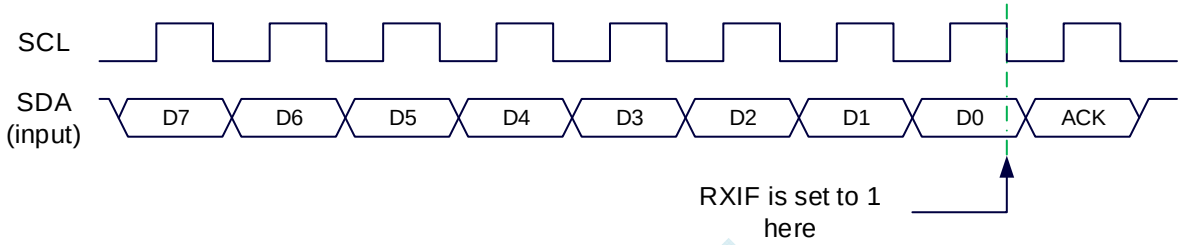

TXIF：Interrupt request bit after 1-byte datum transmission is completed in slave mode. After the I2C controller in slave mode completes sending 1 byte of datum successfully and receives a 1-bit ACK signal, the hardware will automatically set this bit at the falling edge of the ninth clock and request an interrupt to CPU. TXIF bit must be cleared by software after the interrupt is responded. The time point of TXIF being set is shown below:

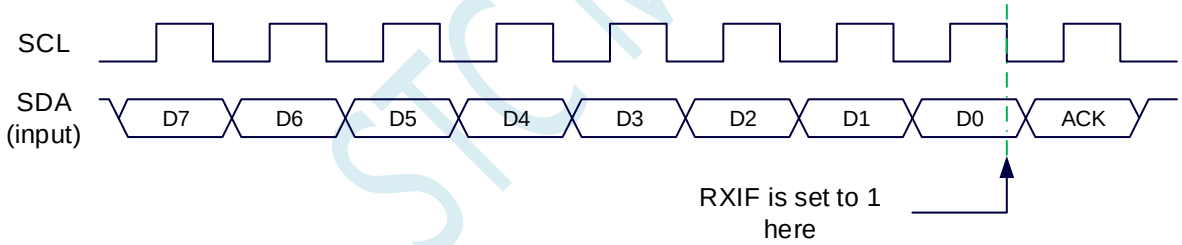

STOIF：Interrupt request bit after STOP signal is received in slave mode. After the I2C controller in slave mode receives the STOP signal, the hardware will automatically set this bit and request interrupt to CPU. The STOIF bit must be cleared by software after the interrupt is serviced. The time point of STOIF being set is shown below:

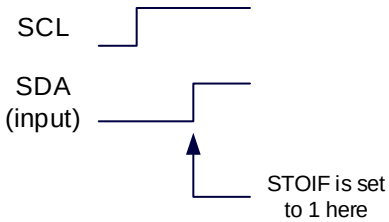

SLACKI：ACK data received in slave mode.

SLACKO：the ACK signal ready to send out in slave mode.

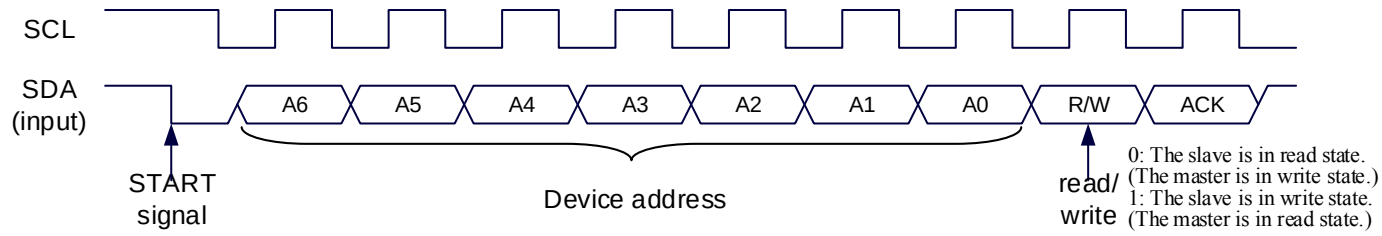

I²C slave address register

Symbol	Address	B7	B6	B5	B4	B3	B2	B1	B0
I2CSLADR	FE85H	SLADR[6:0]							MA

SLADR[6:0]: the slave device address

When the I2C controller is in slave mode, the controller will continue to detect the device address and read / write signals sent by the master after it receives the START signal. If the device address sent by the master matches the slave device address set in SLADR [6: 0], the controller requests an interrupt to CPU requesting the CPU to process the I2C event. Otherwise, if the device address does not match, the I2C The controller continues to monitor, wait for the next START signal, and match the next device address.

MA: Slave device address matching control bit

0: The device address must continue to match SLADR [6: 0].

1: Ignore the settings in SLADR and match all device addresses.

I²C data register

Symbol	Address	B7	B6	B5	B4	B3	B2	B1	B0
I2CTXD	FE86H								
I2CRXD	FE87H								

I2CTXD is the I2C transmit data register that holds the I2C data to be transmitted

I2CRXD is the I2C receive data register that holds the I2C data received.

21.4 Sample program

21.4.1 I²C master mode access AT24C256(interrupt mode)

Assembly code

```
P_SW2       DATA    0BAH

I2CCFG      XDATA   0FE80H
I2CMSCR     XDATA   0FE81H
I2CMSST     XDATA   0FE82H
I2CSLCR     XDATA   0FE83H
I2CSLST     XDATA   0FE84H
I2CSLADR    XDATA   0FE85H
I2CTXD      XDATA   0FE86H
I2CRXD      XDATA   0FE87H

SDA         BIT     P1.4
SCL         BIT     P1.5
```

```
BUSY        BIT     20H.0

            ORG     0000H
            LJMP    MAIN
            ORG     00C3H
            LJMP    I2CISR

            ORG     0100H
I2CISR:
            PUSH    ACC
            PUSH    DPL
            PUSH    DPH

            MOV     DPTR,#I2CMSST           ;Clear interrupt flag
            MOVX    A,@DPTR
            ANL     A,#NOT 40H
            MOV     DPTR,#I2CMSST
            MOVX    @DPTR,A
            CLR     BUSY                    ;Reset busy flag

            POP     DPH
            POP     DPL
            POP     ACC
            RETI

START:
            SETB    BUSY
            MOV     A,#10000001B            ;Send START command
            MOV     DPTR,#I2CMSCR
            MOVX    @DPTR,A
            JMP     WAIT
SENDDATA:
            MOV     DPTR,#I2CTXD            ;Write data to the data buffer
            MOVX    @DPTR,A
            SETB    BUSY
            MOV     A,#10000010B            ;Send SEND command
            MOV     DPTR,#I2CMSCR
            MOVX    @DPTR,A
            JMP     WAIT
RECVACK:
            SETB    BUSY
            MOV     A,#10000011B            ;Send read ACK command
            MOV     DPTR,#I2CMSCR
            MOVX    @DPTR,A
            JMP     WAIT
RECVDATA:
            SETB    BUSY
            MOV     A,#10000100B            ;Send RECV command
            MOV     DPTR,#I2CMSCR
            MOVX    @DPTR,A
            CALL    WAIT
            MOV     DPTR,#I2CRXD            ;Reading data from a data buffer
            MOVX    A,@DPTR
            RET
SENDACK:
            MOV     A,#00000000B            ;Setting ACK signal
            MOV     DPTR,#I2CMSST
```

```
            MOVX    @DPTR,A
            SETB    BUSY
            MOV     A,#10000101B        ;Send ACK command
            MOV     DPTR,#I2CMSCR
            MOVX    @DPTR,A
            JMP     WAIT
SENDNAK:
            MOV     A,#00000001B        ;Setting NAK signal
            MOV     DPTR,#I2CMSST
            MOVX    @DPTR,A
            SETB    BUSY
            MOV     A,#10000101B        ;Send ACK command
            MOV     DPTR,#I2CMSCR
            MOVX    @DPTR,A
            JMP     WAIT
STOP:
            SETB    BUSY
            MOV     A,#10000110B        ;Send STOP command
            MOV     DPTR,#I2CMSCR
            MOVX    @DPTR,A
            JMP     WAIT
WAIT:
            JB      BUSY,$              ;Waiting for the command to be sent
            RET

DELAY:
            MOV     R0,#0
            MOV     R1,#0
DELAY1:
            NOP
            NOP
            NOP
            NOP
            DJNZ    R1,DELAY1
            DJNZ    R0,DELAY1
            RET

MAIN:
            MOV     SP,#3FH
            MOV     P_SW2,#80H

            MOV     A,#11100000B        ;Setting I2C Module to Master Mode
            MOV     DPTR,#I2CCFG
            MOVX    @DPTR,A
            MOV     A,#00000000B
            MOV     DPTR,#I2CMSST
            MOVX    @DPTR,A
            SETB    EA

            CALL    START               ;Send start command
            MOV     A,#0A0H
            CALL    SENDDATA            ;Send device address+write command
            CALL    RECVACK
            MOV     A,#000H             ;Send storage address high byte
            CALL    SENDDATA
            CALL    RECVACK
            MOV     A,#000H             ;Send storage address low byte
            CALL    SENDDATA
```

```
        CALL    RECVACK
        MOV     A,#12H          ;Write test data 1
        CALL    SENDDATA
        CALL    RECVACK
        MOV     A,#78H          ;Write test data 2
        CALL    SENDDATA
        CALL    RECVACK
        CALL    STOP            ;Send stop command

        CALL    DELAY           ;Waiting for device to write data

        CALL    START           ;Send start command
        MOV     A,#0A0H         ;Send device address+Write command
        CALL    SENDDATA
        CALL    RECVACK
        MOV     A,#000H         ;Send storage address high byte
        CALL    SENDDATA
        CALL    RECVACK
        MOV     A,#000H         ;Send storage address low byte
        CALL    SENDDATA
        CALL    RECVACK
        CALL    START           ;Send start command
        MOV     A,#0A1H         ;Send device address+read command
        CALL    SENDDATA
        CALL    RECVACK
        CALL    RECVDATA        ;Read data 1
        MOV     P0,A
        CALL    SENDACK
        CALL    RECVDATA        ;Read Data 2
        MOV     P2,A
        CALL    SENDNAK
        CALL    STOP            ;Send stop command

        JMP     $

        END
```

C code

```
#include "reg51.h"
#include "intrins.h"

sfr     P_SW2       =   0xba;

#define I2CCFG          (*(unsigned char volatile xdata *)0xfe80)
#define I2CMSCR         (*(unsigned char volatile xdata *)0xfe81)
#define I2CMSST         (*(unsigned char volatile xdata *)0xfe82)
#define I2CSLCR         (*(unsigned char volatile xdata *)0xfe83)
#define I2CSLST         (*(unsigned char volatile xdata *)0xfe84)
#define I2CSLADR        (*(unsigned char volatile xdata *)0xfe85)
#define I2CTXD          (*(unsigned char volatile xdata *)0xfe86)
#define I2CRXD          (*(unsigned char volatile xdata *)0xfe87)

sbit    SDA         =   P1^4;
sbit    SCL         =   P1^5;

bit     busy;
```

```
void I2C_Isr() interrupt 24
{
	_push_(P_SW2);
	P_SW2 |= 0x80;
	if (I2CMSST & 0x40)
	{
		I2CMSST &= ~0x40;		//Clear interrupt flag
		busy = 0;
	}
	_pop_(P_SW2);
}

void Start()
{
	busy = 1;
	I2CMSCR = 0x81;			//Send START command
	while (busy);
}

void SendData(char dat)
{
	I2CTXD = dat;			//Write data to the data buffer
	busy = 1;
	I2CMSCR = 0x82;			//Send SEND command
	while (busy);
}

void RecvACK()
{
	busy = 1;
	I2CMSCR = 0x83;			//Send read ACK command
	while (busy);
}

char RecvData()
{
	busy = 1;
	I2CMSCR = 0x84;			//Send RECV command
	while (busy);
	return I2CRXD;
}

void SendACK()
{
	I2CMSST = 0x00;			//Setting ACK signal
	busy = 1;
	I2CMSCR = 0x85;			//Send ACK command
	while (busy);
}

void SendNAK()
{
	I2CMSST = 0x01;			//Setting NAK signal
	busy = 1;
	I2CMSCR = 0x85;			//Send ACK command
	while (busy);
}
```

```
void Stop()
{
    busy = 1;
    I2CMSCR = 0x86;                 //Send STOP command
    while (busy);
}

void Delay()
{
    int i;

    for (i=0; i<3000; i++)
    {
        _nop_();
        _nop_();
        _nop_();
        _nop_();
    }
}

void main()
{
    P_SW2 = 0x80;

    I2CCFG = 0xe0;                  //Enable I2C master mode
    I2CMSST = 0x00;
    EA = 1;

    Start();                        //Send start command
    SendData(0xa0);                 //Send device address+Write command
    RecvACK();
    SendData(0x00);                 //Send storage address high byte
    RecvACK();
    SendData(0x00);                 //Send storage address low byte
    RecvACK();
    SendData(0x12);                 //Write test data 1
    RecvACK();
    SendData(0x78);                 //Write test data 2
    RecvACK();
    Stop();                         //Send stop command

    Delay();                        //Waiting for device to write data

    Start();                        //Send start command
    SendData(0xa0);                 //Send device address+Write command
    RecvACK();
    SendData(0x00);                 //Send storage address high byte
    RecvACK();
    SendData(0x00);                 //Send storage address low byte
    RecvACK();
    Start();                        //Send start command
    SendData(0xa1);                 //Send device address+read command
    RecvACK();
    P0 = RecvData();                //Read data 1
    SendACK();
    P2 = RecvData();                //Read Data 2
    SendNAK();
    Stop();                         //Send stop command
```

```
    P_SW2 = 0x00;

    while (1);
}
```

21.4.2 I²C master mode access AT24C256(Query mode)

Assembly code

```
P_SW2       DATA    0BAH

I2CCFG      XDATA   0FE80H
I2CMSCR     XDATA   0FE81H
I2CMSST     XDATA   0FE82H
I2CSLCR     XDATA   0FE83H
I2CSLST     XDATA   0FE84H
I2CSLADR    XDATA   0FE85H
I2CTXD      XDATA   0FE86H
I2CRXD      XDATA   0FE87H

SDA         BIT     P1.4
SCL         BIT     P1.5

            ORG     0000H
            LJMP    MAIN

            ORG     0100H
START:
            MOV     A,#00000001B        ;Send START command
            MOV     DPTR,#I2CMSCR
            MOVX    @DPTR,A
            JMP     WAIT
SENDDATA:
            MOV     DPTR,#I2CTXD        ;Write data to the data buffer
            MOVX    @DPTR,A
            MOV     A,#00000010B        ;Send SEND command
            MOV     DPTR,#I2CMSCR
            MOVX    @DPTR,A
            JMP     WAIT
RECVACK:
            MOV     A,#00000011B        ;Send read ACK command
            MOV     DPTR,#I2CMSCR
            MOVX    @DPTR,A
            JMP     WAIT
RECVDATA:
            MOV     A,#00000100B        ;Send RECV command
            MOV     DPTR,#I2CMSCR
            MOVX    @DPTR,A
            CALL    WAIT
            MOV     DPTR,#I2CRXD        ;Reading data from a data buffer
            MOVX    A,@DPTR
            RET
SENDACK:
            MOV     A,#00000000B        ;Setting ACK signal
            MOV     DPTR,#I2CMSST
            MOVX    @DPTR,A
```

```
            MOV     A,#00000101B        ;Send ACK command
            MOV     DPTR,#I2CMSCR
            MOVX    @DPTR,A
            JMP     WAIT
SENDNAK:
            MOV     A,#00000001B        ;Setting NAK signal
            MOV     DPTR,#I2CMSST
            MOVX    @DPTR,A
            MOV     A,#00000101B        ;Send ACK command
            MOV     DPTR,#I2CMSCR
            MOVX    @DPTR,A
            JMP     WAIT
STOP:
            MOV     A,#00000110B        ;Send STOP command
            MOV     DPTR,#I2CMSCR
            MOVX    @DPTR,A
            JMP     WAIT
WAIT:
            MOV     DPTR,#I2CMSST       ;Clear interrupt flag
            MOVX    A,@DPTR
            JNB     ACC.6,WAIT
            ANL     A,#NOT 40H
            MOVX    @DPTR,A
            RET

DELAY:
            MOV     R0,#0
            MOV     R1,#0
DELAY1:
            NOP
            NOP
            NOP
            NOP
            DJNZ    R1,DELAY1
            DJNZ    R0,DELAY1
            RET

MAIN:
            MOV     SP,#3FH
            MOV     P_SW2,#80H

            MOV     A,#11100000B        ;Setting I2C Module to Master Mode
            MOV     DPTR,#I2CCFG
            MOVX    @DPTR,A
            MOV     A,#00000000B
            MOV     DPTR,#I2CMSST
            MOVX    @DPTR,A

            CALL    START               ;Send start command
            MOV     A,#0A0H
            CALL    SENDDATA            ;Send device address+Write command
            CALL    RECVACK
            MOV     A,#000H             ;Send storage address high byte
            CALL    SENDDATA
            CALL    RECVACK
            MOV     A,#000H             ;Send storage address low byte
            CALL    SENDDATA
            CALL    RECVACK
```

```
        MOV     A,#12H          ;Write test data 1
        CALL    SENDDATA
        CALL    RECVACK
        MOV     A,#78H          ;Write test data 2
        CALL    SENDDATA
        CALL    RECVACK
        CALL    STOP            ;Send stop command

        CALL    DELAY           ;Waiting for device to write data

        CALL    START           ;Send start command
        MOV     A,#0A0H         ;Send device address+Write command
        CALL    SENDDATA
        CALL    RECVACK
        MOV     A,#000H         ;Send storage address high byte
        CALL    SENDDATA
        CALL    RECVACK
        MOV     A,#000H         ;Send storage address low byte
        CALL    SENDDATA
        CALL    RECVACK
        CALL    START           ;Send start command
        MOV     A,#0A1H         ;Send device address+read command
        CALL    SENDDATA
        CALL    RECVACK
        CALL    RECVDATA        ;Read data 1
        MOV     P0,A
        CALL    SENDACK
        CALL    RECVDATA        ;Read Data 2
        MOV     P2,A
        CALL    SENDNAK
        CALL    STOP            ;Send stop command

        JMP     $

        END
```

C code

```
#include "reg51.h"
#include "intrins.h"

sfr     P_SW2       =   0xba;

#define I2CCFG          (*(unsigned char volatile xdata *)0xfe80)
#define I2CMSCR         (*(unsigned char volatile xdata *)0xfe81)
#define I2CMSST         (*(unsigned char volatile xdata *)0xfe82)
#define I2CSLCR         (*(unsigned char volatile xdata *)0xfe83)
#define I2CSLST         (*(unsigned char volatile xdata *)0xfe84)
#define I2CSLADR        (*(unsigned char volatile xdata *)0xfe85)
#define I2CTXD          (*(unsigned char volatile xdata *)0xfe86)
#define I2CRXD          (*(unsigned char volatile xdata *)0xfe87)

sbit    SDA         =   P1^4;
sbit    SCL         =   P1^5;

void Wait()
{
    while (!(I2CMSST & 0x40));
```

```
    I2CMSST &= ~0x40;
}

void Start()
{
    I2CMSCR = 0x01;                 //Send START command
    Wait();
}

void SendData(char dat)
{
    I2CTXD = dat;                   //Write data to the data buffer
    I2CMSCR = 0x02;                 //Send SEND command
    Wait();
}

void RecvACK()
{
    I2CMSCR = 0x03;                 //Send read ACK command
    Wait();
}

char RecvData()
{
    I2CMSCR = 0x04;                 //Send RECV command
    Wait();
    return I2CRXD;
}

void SendACK()
{
    I2CMSST = 0x00;                 //Setting ACK signal
    I2CMSCR = 0x05;                 //Send ACK command
    Wait();
}

void SendNAK()
{
    I2CMSST = 0x01;                 //Setting NAK signal
    I2CMSCR = 0x05;                 //Send ACK command
    Wait();
}

void Stop()
{
    I2CMSCR = 0x06;                 //Send STOP command
    Wait();
}

void Delay()
{
    int i;

    for (i=0; i<3000; i++)
    {
        _nop_();
        _nop_();
        _nop_();
```

```
        _nop_();
    }
}

void main()
{
    P_SW2 = 0x80;

    I2CCFG = 0xe0;                  //Enable I2Cmater mode
    I2CMSST = 0x00;

    Start();                        //Send start command
    SendData(0xa0);                 //Send device address+Write command
    RecvACK();
    SendData(0x00);                 //Send storage address high byte
    RecvACK();
    SendData(0x00);                 //Send storage address low byte
    RecvACK();
    SendData(0x12);                 //Write test data 1
    RecvACK();
    SendData(0x78);                 //Write test data 2
    RecvACK();
    Stop();                         //Send stop command

    Delay();                        //Waiting for device to write data

    Start();                        //Send start command
    SendData(0xa0);                 //Send device address+Write command
    RecvACK();
    SendData(0x00);                 /Send storage address high byte
    RecvACK();
    SendData(0x00);                 //Send storage address low byte
    RecvACK();
    Start();                        //Send start command
    SendData(0xa1);                 //Send device address+read command
    RecvACK();
    P0 = RecvData();                //Read data 1
    SendACK();
    P2 = RecvData();                //Read Data 2
    SendNAK();
    Stop();                         //Send stop command

    P_SW2 = 0x00;

    while (1);
}
```

21.4.3 I²C master mode access PCF8563

Assembly code

```
P_SW2       DATA    0BAH

I2CCFG      XDATA   0FE80H
I2CMSCR     XDATA   0FE81H
I2CMSST     XDATA   0FE82H
I2CSLCR     XDATA   0FE83H
```

```
I2CSLST     XDATA   0FE84H
I2CSLADR    XDATA   0FE85H
I2CTXD      XDATA   0FE86H
I2CRXD      XDATA   0FE87H

SDA         BIT     P1.4
SCL         BIT     P1.5

            ORG     0000H
            LJMP    MAIN

            ORG     0100H
START:
            MOV     A,#00000001B        ;Send START command
            MOV     DPTR,#I2CMSCR
            MOVX    @DPTR,A
            JMP     WAIT
SENDDATA:
            MOV     DPTR,#I2CTXD        ;Write data to the data buffer
            MOVX    @DPTR,A
            MOV     A,#00000010B        ;Send SEND command
            MOV     DPTR,#I2CMSCR
            MOVX    @DPTR,A
            JMP     WAIT
RECVACK:
            MOV     A,#00000011B        ;Send read ACK command
            MOV     DPTR,#I2CMSCR
            MOVX    @DPTR,A
            JMP     WAIT
RECVDATA:
            MOV     A,#00000100B        ;Send RECV command
            MOV     DPTR,#I2CMSCR
            MOVX    @DPTR,A
            CALL    WAIT
            MOV     DPTR,#I2CRXD        ;Reading data from a data buffer
            MOVX    A,@DPTR
            RET
SENDACK:
            MOV     A,#00000000B        ;Setting ACK signal
            MOV     DPTR,#I2CMSST
            MOVX    @DPTR,A
            MOV     A,#00000101B        ;Send ACK command
            MOV     DPTR,#I2CMSCR
            MOVX    @DPTR,A
            JMP     WAIT
SENDNAK:
            MOV     A,#00000001B        ;Setting NAK signal
            MOV     DPTR,#I2CMSST
            MOVX    @DPTR,A
            MOV     A,#00000101B        ;Send ACK command
            MOV     DPTR,#I2CMSCR
            MOVX    @DPTR,A
            JMP     WAIT
STOP:
            MOV     A,#00000110B        ;Send STOP command
            MOV     DPTR,#I2CMSCR
            MOVX    @DPTR,A
            JMP     WAIT
```

```
WAIT:
        MOV     DPTR,#I2CMSST       ;Clear interrupt flag
        MOVX    A,@DPTR
        JNB     ACC.6,WAIT
        ANL     A,#NOT 40H
        MOVX    @DPTR,A
        RET

DELAY:
        MOV     R0,#0
        MOV     R1,#0
DELAY1:
        NOP
        NOP
        NOP
        NOP
        DJNZ    R1,DELAY1
        DJNZ    R0,DELAY1
        RET

MAIN:
        MOV     SP,#3FH
        MOV     P_SW2,#80H

        MOV     A,#11100000B        ;Setting I2C Module to Master Mode
        MOV     DPTR,#I2CCFG
        MOVX    @DPTR,A
        MOV     A,#00000000B
        MOV     DPTR,#I2CMSST
        MOVX    @DPTR,A

        CALL    START               ;Send start command
        MOV     A,#0A2H
        CALL    SENDDATA            ;Send device address+Write command
        CALL    RECVACK
        MOV     A,#002H             ;send storage address
        CALL    SENDDATA
        CALL    RECVACK
        MOV     A,#00H              ;Setting the second value
        CALL    SENDDATA
        CALL    RECVACK
        MOV     A,#00H              ;Set the minute value
        CALL    SENDDATA
        CALL    RECVACK
        MOV     A,#12H              ;Set the hour value
        CALL    SENDDATA
        CALL    RECVACK
        CALL    STOP                ;Send stop command
LOOP:
        CALL    START               ;Send start command
        MOV     A,#0A2H             ;Send device address+Write command
        CALL    SENDDATA
        CALL    RECVACK
        MOV     A,#002H             ;send storage address
        CALL    SENDDATA
        CALL    RECVACK
        CALL    START               ;Send start command
        MOV     A,#0A3H             ;Send device address+read command
```

```
        CALL    SENDDATA
        CALL    RECVACK
        CALL    RECVDATA        ;Read second value
        MOV     P0,A
        CALL    SENDACK
        CALL    RECVDATA        ;Read minute value
        MOV     P2,A
        CALL    SENDACK
        CALL    RECVDATA        ;Read hour value
        MOV     P3,A
        CALL    SENDNAK
        CALL    STOP            ;Send stop command

        CALL    DELAY

        JMP     LOOP

        END
```

C code

```
#include "reg51.h"
#include "intrins.h"

sfr     P_SW2       =   0xba;

#define I2CCFG          (*(unsigned char volatile xdata *)0xfe80)
#define I2CMSCR         (*(unsigned char volatile xdata *)0xfe81)
#define I2CMSST         (*(unsigned char volatile xdata *)0xfe82)
#define I2CSLCR         (*(unsigned char volatile xdata *)0xfe83)
#define I2CSLST         (*(unsigned char volatile xdata *)0xfe84)
#define I2CSLADR        (*(unsigned char volatile xdata *)0xfe85)
#define I2CTXD          (*(unsigned char volatile xdata *)0xfe86)
#define I2CRXD          (*(unsigned char volatile xdata *)0xfe87)

sbit    SDA         =   P1^4;
sbit    SCL         =   P1^5;

void Wait()
{
    while (!(I2CMSST & 0x40));
    I2CMSST &= ~0x40;
}

void Start()
{
    I2CMSCR = 0x01;             //Send START command
    Wait();
}

void SendData(char dat)
{
    I2CTXD = dat;               //Write data to the data buffer
    I2CMSCR = 0x02;             //Send SEND command
    Wait();
}

void RecvACK()
```

```
{
    I2CMSCR = 0x03;             //Send read ACK command
    Wait();
}

char RecvData()
{
    I2CMSCR = 0x04;             //Send RECV command
    Wait();
    return I2CRXD;
}

void SendACK()
{
    I2CMSST = 0x00;             //Setting ACK signal
    I2CMSCR = 0x05;             //Send ACK command
    Wait();
}

void SendNAK()
{
    I2CMSST = 0x01;             //Setting NAK signal
    I2CMSCR = 0x05;             //Send ACK command
    Wait();
}

void Stop()
{
    I2CMSCR = 0x06;             //Send STOP command
    Wait();
}

void Delay()
{
    int i;

    for (i=0; i<3000; i++)
    {
        _nop_();
        _nop_();
        _nop_();
        _nop_();
    }
}

void main()
{
    P_SW2 = 0x80;

    I2CCFG = 0xe0;              //Enable I2C master mode
    I2CMSST = 0x00;

    Start();                    //Send start command
    SendData(0xa2);             //Send device address+Write command
    RecvACK();
    SendData(0x02);             //send storage address
    RecvACK();
    SendData(0x00);             //Setting the second value
```

```
    RecvACK();
    SendData(0x00);                 //Set the minute value
    RecvACK();
    SendData(0x12);                 //Set the hour value
    RecvACK();
    Stop();                         //Send stop command

    while (1)
    {
        Start();                    //Send start command
        SendData(0xa2);             //Send device address+Write command
        RecvACK();
        SendData(0x02);             //send storage address
        RecvACK();
        Start();                    //Send start command
        SendData(0xa3);             //Send device address+read command
        RecvACK();
        P0 = RecvData();            //Read second value
        SendACK();
        P2 = RecvData();            //Read minute value
        SendACK();
        P3 = RecvData();            //Read hour value
        SendNAK();
        Stop();                     //Send stop command

        Delay();
    }
}
```

21.4.4 I²C Slave Mode(interrupt mode)

Assembly code

```
P_SW2       DATA    0BAH

I2CCFG      XDATA   0FE80H
I2CMSCR     XDATA   0FE81H
I2CMSST     XDATA   0FE82H
I2CSLCR     XDATA   0FE83H
I2CSLST     XDATA   0FE84H
I2CSLADR    XDATA   0FE85H
I2CTXD      XDATA   0FE86H
I2CRXD      XDATA   0FE87H

SDA         BIT     P1.4
SCL         BIT     P1.5
ISDA        BIT     20H.0           ;Device address flag
ISMA        BIT     20H.1           ;Storage address flag

ADDR        DATA    21H

            ORG     0000H
            LJMP    MAIN
            ORG     00C3H
            LJMP    I2CISR

            ORG     0100H
```

```
I2CISR:
        PUSH    ACC
        PUSH    PSW
        PUSH    DPL
        PUSH    DPH
        MOV     DPTR,#I2CSLST       ;Detection of slave status
        MOVX    A,@DPTR
        JB      ACC.6,STARTIF
        JB      ACC.5,RXIF
        JB      ACC.4,TXIF
        JB      ACC.3,STOPIF
ISREXIT:
        POP     DPH
        POP     DPL
        POP     PSW
        POP     ACC
        RETI
STARTIF:
        ANL     A,#NOT 40H          ;Handling START events
        MOVX    @DPTR,A
        JMP     ISREXIT
RXIF:
        ANL     A,#NOT 20H          ;Handling RECV events
        MOVX    @DPTR,A
        MOV     DPTR,#I2CRXD
        MOVX    A,@DPTR
        JBC     ISDA,RXDA
        JBC     ISMA,RXMA
        MOV     R0,ADDR             ;Handling RECV events(RECV DATA)
        MOVX    @R0,A
        INC     ADDR
        JMP     ISREXIT
RXDA:
        JMP     ISREXIT             ;Handling RECV events(RECV DEVICE ADDR)
RXMA:
        MOV     ADDR,A              ;Handling RECV events(RECV MEMORY ADDR)
        MOV     R0,A
        MOVX    A,@R0
        MOV     DPTR,#I2CTXD
        MOVX    @DPTR,A
        JMP     ISREXIT
TXIF:
        ANL     A,#NOT 10H          ;Handling SEND events
        MOVX    @DPTR,A
        JB      ACC.1,RXNAK
        INC     ADDR
        MOV     R0,ADDR
        MOVX    A,@R0
        MOV     DPTR,#I2CTXD
        MOVX    @DPTR,A
        JMP     ISREXIT
RXNAK:
        MOVX    A,#0FFH
        MOV     DPTR,#I2CTXD
        MOVX    @DPTR,A
        JMP     ISREXIT
STOPIF:
        ANL     A,#NOT 08H          ;Handling STOP events
```

```
                MOVX    @DPTR,A
                SETB    ISDA
                SETB    ISMA
                JMP     ISREXIT

MAIN:
                MOV     P_SW2,#80H

                MOV     A,#10000001B            ;Enable I2C slave mode
                MOV     DPTR,#I2CCFG
                MOVX    @DPTR,A
                MOV     A,#01011010B            ;Set slave device address to 5A
                MOV     DPTR,#I2CSLADR
                MOVX    @DPTR,A
                MOV     A,#00000000B
                MOV     DPTR,#I2CSLST
                MOVX    @DPTR,A
                MOV     A,#01111000B            ;Enable slave mode interrupt
                MOV     DPTR,#I2CSLCR
                MOVX    @DPTR,A

                SETB    ISDA                    ;User variable initialization
                SETB    ISMA
                CLR     A
                MOV     ADDR,A
                MOV     R0,A
                MOVX    A,@R0
                MOV     DPTR,#I2CTXD
                MOVX    @DPTR,A

                SETB    EA

                SJMP    $

                END
```

C code

```
#include "reg51.h"
#include "intrins.h"

sfr     P_SW2       =   0xba;

#define I2CCFG          (*(unsigned char volatile xdata *)0xfe80)
#define I2CMSCR         (*(unsigned char volatile xdata *)0xfe81)
#define I2CMSST         (*(unsigned char volatile xdata *)0xfe82)
#define I2CSLCR         (*(unsigned char volatile xdata *)0xfe83)
#define I2CSLST         (*(unsigned char volatile xdata *)0xfe84)
#define I2CSLADR        (*(unsigned char volatile xdata *)0xfe85)
#define I2CTXD          (*(unsigned char volatile xdata *)0xfe86)
#define I2CRXD          (*(unsigned char volatile xdata *)0xfe87)

sbit    SDA         =   P1^4;
sbit    SCL         =   P1^5;

bit             isda;       //Device address flag
bit             isma;       //Storage address flag
unsigned char   addr;
```

```
unsigned char pdata         buffer[256];

void I2C_Isr() interrupt 24
{
    _push_(P_SW2);
    P_SW2 |= 0x80;

    if (I2CSLST & 0x40)
    {
        I2CSLST &= ~0x40;               //Handling START events
    }
    else if (I2CSLST & 0x20)
    {
        I2CSLST &= ~0x20;               //Handling RECV events
        if (isda)
        {
            isda = 0;                   //Handling RECV events(RECV DEVICE ADDR)
        }
        else if (isma)
        {
            isma = 0;                   //Handling RECV events(RECV MEMORY ADDR)
            addr = I2CRXD;
            I2CTXD = buffer[addr];
        }
        else
        {
            buffer[addr++] = I2CRXD;    //Handling RECV events(RECV DATA)
        }
    }
    else if (I2CSLST & 0x10)
    {
        I2CSLST &= ~0x10;               //Handling SEND events
        if (I2CSLST & 0x02)
        {
            I2CTXD = 0xff;              //Received NAK then stop reading data
        }
        else
        {
            I2CTXD = buffer[++addr];    //Receive ACK then continue reading data
        }
    }
    else if (I2CSLST & 0x08)
    {
        I2CSLST &= ~0x08;               //Handling STOP events
        isda = 1;
        isma = 1;
    }

    _pop_(P_SW2);
}

void main()
{
    P_SW2 = 0x80;

    I2CCFG = 0x81;                      //Enable I2C slave mode
    I2CSLADR = 0x5a;                    //Set slave device address to 5A
    I2CSLST = 0x00;
```

```
    I2CSLCR = 0x78;                 //Enable slave mode interrupt
    EA = 1;

    isda = 1;                       //User variable initialization
    isma = 1;
    addr = 0;
    I2CTXD = buffer[addr];

    while (1);
}
```

21.4.5 I²CSlave Mode(Query mode)

Assembly code

```
P_SW2       DATA    0BAH

I2CCFG      XDATA   0FE80H
I2CMSCR     XDATA   0FE81H
I2CMSST     XDATA   0FE82H
I2CSLCR     XDATA   0FE83H
I2CSLST     XDATA   0FE84H
I2CSLADR    XDATA   0FE85H
I2CTXD      XDATA   0FE86H
I2CRXD      XDATA   0FE87H

SDA         BIT     P1.4
SCL         BIT     P1.5
ISDA        BIT     20H.0           ;Device address flag
ISMA        BIT     20H.1           ;Storage address flag

ADDR        DATA    21H

            ORG     0000H
            LJMP    MAIN

            ORG     0100H
MAIN:
            MOV     P_SW2,#80H

            MOV     A,#10000001B    ;Enable I2C slave mode
            MOV     DPTR,#I2CCFG
            MOVX    @DPTR,A
            MOV     A,#01011010B    ;Set slave device address to 5A
            MOV     DPTR,#I2CSLADR
            MOVX    @DPTR,A
            MOV     A,#00000000B
            MOV     DPTR,#I2CSLST
            MOVX    @DPTR,A
            MOV     A,#00000000B    ;Disable slave mode interrupt
            MOV     DPTR,#I2CSLCR
            MOVX    @DPTR,A

            SETB    ISDA            ;User variable initialization
            SETB    ISMA
            CLR     A
            MOV     ADDR,A
```

```
            MOV     R0,A
            MOVX    A,@R0
            MOV     DPTR,#I2CTXD
            MOVX    @DPTR,A

LOOP:
            MOV     DPTR,#I2CSLST       ;Detection of slave status
            MOVX    A,@DPTR
            JB      ACC.6,STARTIF
            JB      ACC.5,RXIF
            JB      ACC.4,TXIF
            JB      ACC.3,STOPIF
            JMP     LOOP
STARTIF:
            ANL     A,#NOT 40H          ;Handling START events
            MOVX    @DPTR,A
            JMP     LOOP
RXIF:
            ANL     A,#NOT 20H          ;Handling RECV events
            MOVX    @DPTR,A
            MOV     DPTR,#I2CRXD
            MOVX    A,@DPTR
            JBC     ISDA,RXDA
            JBC     ISMA,RXMA
            MOV     R0,ADDR             ;Handling RECV events(RECV DATA)
            MOVX    @R0,A
            INC     ADDR
            JMP     LOOP
RXDA:
            JMP     LOOP                ;Handling RECV events(RECV DEVICE ADDR)
RXMA:
            MOV     ADDR,A              ;Handling RECV events(RECV MEMORY ADDR)
            MOV     R0,A
            MOVX    A,@R0
            MOV     DPTR,#I2CTXD
            MOVX    @DPTR,A
            JMP     LOOP
TXIF:
            ANL     A,#NOT 10H          ;Handling SEND events
            MOVX    @DPTR,A
            JB      ACC.1,RXNAK
            INC     ADDR
            MOV     R0,ADDR
            MOVX    A,@R0
            MOV     DPTR,#I2CTXD
            MOVX    @DPTR,A
            JMP     LOOP
RXNAK:
            MOVX    A,#0FFH
            MOV     DPTR,#I2CTXD
            MOVX    @DPTR,A
            JMP     LOOP
STOPIF:
            ANL     A,#NOT 08H          ;Handling STOP events
            MOVX    @DPTR,A
            SETB    ISDA
            SETB    ISMA
            JMP     LOOP
```

```
END
```

C code

```
#include "reg51.h"
#include "intrins.h"

sfr     P_SW2       =   0xba;

#define I2CCFG          (*(unsigned char volatile xdata *)0xfe80)
#define I2CMSCR         (*(unsigned char volatile xdata *)0xfe81)
#define I2CMSST         (*(unsigned char volatile xdata *)0xfe82)
#define I2CSLCR         (*(unsigned char volatile xdata *)0xfe83)
#define I2CSLST         (*(unsigned char volatile xdata *)0xfe84)
#define I2CSLADR        (*(unsigned char volatile xdata *)0xfe85)
#define I2CTXD          (*(unsigned char volatile xdata *)0xfe86)
#define I2CRXD          (*(unsigned char volatile xdata *)0xfe87)

sbit    SDA         =   P1^4;
sbit    SCL         =   P1^5;

bit                 isda;           //Device address flag
bit                 isma;           //Storage address flag
unsigned char       addr;
unsigned char pdata buffer[256];

void main()
{
    P_SW2 = 0x80;

    I2CCFG = 0x81;                  //Enable I2C slave mode
    I2CSLADR = 0x5a;                //Set slave device address to 5A
    I2CSLST = 0x00;
    I2CSLCR = 0x00;                 //Disable slave mode interrupt

    isda = 1;                       //User variable initialization
    isma = 1;
    addr = 0;
    I2CTXD = buffer[addr];

    while (1)
    {
        if (I2CSLST & 0x40)
        {
            I2CSLST &= ~0x40;       //Handling START events
        }
        else if (I2CSLST & 0x20)
        {
            I2CSLST &= ~0x20;       //Handling RECV events
            if (isda)
            {
                isda = 0;           //Handling RECV events(RECV DEVICE ADDR)
            }
            else if (isma)
            {
                isma = 0;           //Handling RECV events(RECV MEMORY ADDR)
                addr = I2CRXD;
```

```
                I2CTXD = buffer[addr];
            }
            else
            {
                buffer[addr++] = I2CRXD;  //Handling RECV events(RECV DATA)
            }
        }
        else if (I2CSLST & 0x10)
        {
            I2CSLST &= ~0x10;         //Handling SEND events
            if (I2CSLST & 0x02)
            {
                I2CTXD = 0xff;        //Received NAK then stop reading data
            }
            else
            {
                I2CTXD = buffer[++addr];  //Receive ACK then continue reading data
            }
        }
        else if (I2CSLST & 0x08)
        {
            I2CSLST &= ~0x08;         //Handling STOP events
            isda = 1;
            isma = 1;
        }
    }
}
```

21.4.6 Host code for testing I2C slave mode code

Assembly code

```
P_SW2       DATA    0BAH

I2CCFG      XDATA   0FE80H
I2CMSCR     XDATA   0FE81H
I2CMSST     XDATA   0FE82H
I2CSLCR     XDATA   0FE83H
I2CSLST     XDATA   0FE84H
I2CSLADR    XDATA   0FE85H
I2CTXD      XDATA   0FE86H
I2CRXD      XDATA   0FE87H

SDA         BIT     P1.4
SCL         BIT     P1.5

            ORG     0000H
            LJMP    MAIN

            ORG     0100H
START:
            MOV     A,#00000001B        ;Send START command
            MOV     DPTR,#I2CMSCR
            MOVX    @DPTR,A
            JMP     WAIT
SENDDATA:
            MOV     DPTR,#I2CTXD        ;Write data to the data buffer
```

```
            MOVX    @DPTR,A
            MOV     A,#00000010B        ;Send SEND command
            MOV     DPTR,#I2CMSCR
            MOVX    @DPTR,A
            JMP     WAIT
RECVACK:
            MOV     A,#00000011B        ;Send read ACK command
            MOV     DPTR,#I2CMSCR
            MOVX    @DPTR,A
            JMP     WAIT
RECVDATA:
            MOV     A,#00000100B        ;Send RECV command
            MOV     DPTR,#I2CMSCR
            MOVX    @DPTR,A
            CALL    WAIT
            MOV     DPTR,#I2CRXD        ;Reading data from a data buffer
            MOVX    A,@DPTR
            RET
SENDACK:
            MOV     A,#00000000B        ;Setting ACK signal
            MOV     DPTR,#I2CMSST
            MOVX    @DPTR,A
            MOV     A,#00000101B        ;Send ACK command
            MOV     DPTR,#I2CMSCR
            MOVX    @DPTR,A
            JMP     WAIT
SENDNAK:
            MOV     A,#00000001B        ;Setting NAK signal
            MOV     DPTR,#I2CMSST
            MOVX    @DPTR,A
            MOV     A,#00000101B        ;Send ACK command
            MOV     DPTR,#I2CMSCR
            MOVX    @DPTR,A
            JMP     WAIT
STOP:
            MOV     A,#00000110B        ;Send STOP command
            MOV     DPTR,#I2CMSCR
            MOVX    @DPTR,A
            JMP     WAIT
WAIT:
            MOV     DPTR,#I2CMSST       ;Clear interrupt flag
            MOVX    A,@DPTR
            JNB     ACC.6,WAIT
            ANL     A,#NOT 40H
            MOVX    @DPTR,A
            RET

DELAY:
            MOV     R0,#0
            MOV     R1,#0
DELAY1:
            NOP
            NOP
            NOP
            NOP
            DJNZ    R1,DELAY1
            DJNZ    R0,DELAY1
            RET
```

```
MAIN:
        MOV     SP,#3FH
        MOV     P_SW2,#80H

        MOV     A,#11100000B        ;Setting I2C Module to Host Mode
        MOV     DPTR,#I2CCFG
        MOVX    @DPTR,A
        MOV     A,#00000000B
        MOV     DPTR,#I2CMSST
        MOVX    @DPTR,A

        CALL    START               ;Send start command
        MOV     A,#5AH              ;Slave address 5A
        CALL    SENDDATA            ;Send device address+Write command
        CALL    RECVACK
        MOV     A,#000H             ;send storage address
        CALL    SENDDATA
        CALL    RECVACK
        MOV     A,#12H              ;Write test data 1
        CALL    SENDDATA
        CALL    RECVACK
        MOV     A,#78H              ;Write test data 2
        CALL    SENDDATA
        CALL    RECVACK
        CALL    STOP                ;Send stop command

        CALL    DELAY               ;Waiting for device to write data

        CALL    START               ;Send start command
        MOV     A,#5AH              ;Send device address+Write command
        CALL    SENDDATA
        CALL    RECVACK
        MOV     A,#000H             ; send storage address
        CALL    SENDDATA
        CALL    RECVACK
        CALL    START               ;Send start command
        MOV     A,#5BH              ;Send device address+read command
        CALL    SENDDATA
        CALL    RECVACK
        CALL    RECVDATA            ;Read data 1
        MOV     P0,A
        CALL    SENDACK
        CALL    RECVDATA            ;Read data 2
        MOV     P2,A
        CALL    SENDNAK
        CALL    STOP                ;Send stop command

        JMP     $

        END
```

C code

```
#include "reg51.h"
#include "intrins.h"

sfr     P_SW2     =     0xba;
```

```
#define   I2CCFG      (*(unsigned char volatile xdata *)0xfe80)
#define   I2CMSCR     (*(unsigned char volatile xdata *)0xfe81)
#define   I2CMSST     (*(unsigned char volatile xdata *)0xfe82)
#define   I2CSLCR     (*(unsigned char volatile xdata *)0xfe83)
#define   I2CSLST     (*(unsigned char volatile xdata *)0xfe84)
#define   I2CSLADR    (*(unsigned char volatile xdata *)0xfe85)
#define   I2CTXD      (*(unsigned char volatile xdata *)0xfe86)
#define   I2CRXD      (*(unsigned char volatile xdata *)0xfe87)

sbit      SDA     =   P1^4;
sbit      SCL     =   P1^5;

void Wait()
{
    while (!(I2CMSST & 0x40));
    I2CMSST &= ~0x40;
}

void Start()
{
    I2CMSCR = 0x01;             //Send START command
    Wait();
}

void SendData(char dat)
{
    I2CTXD = dat;               //Write data to the data buffer
    I2CMSCR = 0x02;             //Send SEND command
    Wait();
}

void RecvACK()
{
    I2CMSCR = 0x03;             //Send read ACK command
    Wait();
}

char RecvData()
{
    I2CMSCR = 0x04;             //Send RECV command
    Wait();
    return I2CRXD;
}

void SendACK()
{
    I2CMSST = 0x00;             //Setting ACK signal
    I2CMSCR = 0x05;             //Send ACK command
    Wait();
}

void SendNAK()
{
    I2CMSST = 0x01;             //Setting NAK signal
    I2CMSCR = 0x05;             //Send ACK command
    Wait();
}
```

```
void Stop()
{
    I2CMSCR = 0x06;                 //Send STOP command
    Wait();
}

void Delay()
{
    int i;

    for (i=0; i<3000; i++)
    {
        _nop_();
        _nop_();
        _nop_();
        _nop_();
    }
}

void main()
{
    P_SW2 = 0x80;

    I2CCFG = 0xe0;                  //Enable I2C host mode
    I2CMSST = 0x00;

    Start();                        //Send start command
    SendData(0x5a);                 //Send device address+Write command
    RecvACK();
    SendData(0x00);                 //send storage address
    RecvACK();
    SendData(0x12);                 //Write test data 1
    RecvACK();
    SendData(0x78);                 //Write test data 2
    RecvACK();
    Stop();                         //Send stop command

    Start();                        //Send start command
    SendData(0x5a);                 //Send device address+Write command
    RecvACK();
    SendData(0x00);                 //Send storage address high byte
    RecvACK();
    Start();                        //Send start command
    SendData(0x5b);                 //Send device address+read command
    RecvACK();
    P0 = RecvData();                //Read data 1
    SendACK();
    P2 = RecvData();                //Read data 2
    SendNAK();
    Stop();                         //Send stop command

    P_SW2 = 0x00;

    while (1);
}
```

22 Enhanced double data pointer

The STC8 series microcontrollers integrate two sets of 16-bit data pointers. Through program control, the data pointer can be automatically incremented or decremented and the two data pointers can be automatically switched.

Related special function register.

symbol	description	address	Bit address and symbol								Value after reset
			B7	B6	B5	B4	B3	B2	B1	B0	
DPL	Data pointer (low bytes)	82H									0000,0000
DPH	Data pointer (high bytes)	83H									0000,0000
DPL1	Second set of data pointers (low bytes)	E4H									0000,0000
DPH1	second set of data pointers (high byte)	E5H									0000,0000
DPS	DPTR pointer selector	E3H	ID1	ID0	TSL	AU1	AU0	-	-	SEL	0000,0xx0
TA	DPTR timing control register	AEH									0000,0000

Group 1 16-bit data pointer register(DPTR0)

symbol	address	B7	B6	B5	B4	B3	B2	B1	B0
DPL	82H								
DPH	83H								

DPL is low 8 bit data (low bytes)

DPH is high 8 bits of data (high bytes)

DPL and DPH are combined into the first set of 16-bit data pointer registers DPTR0

Group 2 16-bit data pointer registers(DPTR1)

symbol	address	B7	B6	B5	B4	B3	B2	B1	B0
DPL1	E4H								
DPH1	E5H								

DPL is low 8 bit data (low bytes)

DPH is high 8 bits of data (high bytes)

DPL1 and DPH1 combined into a second set of 16-bit data pointer registers DPTR1.

Data pointer control register

symbol	address	B7	B6	B5	B4	B3	B2	B1	B0
DPS	E3H	ID1	ID0	TSL	AU1	AU0	-	-	SEL

ID1：Control DPTR1 automatic increment mode

0：DPTR1 auto increment

1：DPTR1 auto decrement

ID0：Control DPTR0 automatic increment mode

0：DPTR0 auto increment

1：DPTR0auto decrement

TSL：DPTR0/DPTR1 automatic switching control (automatic reverse of SEL)

0：Turn off automatic switching function

1：Enable automatic switching function

When the TSL bit is set, the system automatically negates the SEL bit each time the relevant instruction is executed.

TSL-related instructions include the following：

```
MOV     DPTR,#data16
INC     DPTR
MOVC    A,@A+DPTR
MOVX    A,@DPTR
MOVX    @DPTR,A
```

AU1/AU0：Enable DPTR1/DPTR0 to use the ID1/ID0 control bit for auto increment/decrement control

0：Turn off auto increment/decrement

1：Enable auto increment/decrement

Note: In the write protection mode, the AU0 and AU1 bits cannot be individually enabled. If the AU1 bit is enabled individually, the AU0 bit will be automatically enabled. If AU0 is enabled alone, it has no effect. If you need to enable AU1 or AU0 separately, you must use the TA register to trigger the DPS protection mechanism (refer to the description of the TA register). In addition, DPTR0/DPTR1 is automatically incremented/decremented only after executing the following three instructions. 3 related instructions are as follows：

```
MOVC    A,@A+DPTR
MOVX    A,@DPTR
MOVX    @DPTR,A
```

SEL：Select DPTR0/DPTR1 as the current target DPTR

0：Select DPTR0 as Target DPTR

1：Select DPTR1 as Target DPTR

SELSelect target DPTR is valid for the following instructions：

```
MOV     DPTR,#data16
INC     DPTR
MOVC    A,@A+DPTR
MOVX    A,@DPTR
MOVX    @DPTR,A
JMP     @A+DPTR
```

Data pointer control register

symbol	address	B7	B6	B5	B4	B3	B2	B1	B0
TA	AEH								

The TA register write-protects AU1 and AU0 in the DPS register. Since the program cannot write AU1 and AU0 individually in DPS, when the AU1 or AU0 needs to be enabled separately, the TA register must be used for triggering. The TA register is a write-only register. When you need to enable AU1 or AU0 separately, you must follow the steps below：

```
CLR     EA          ;close interruption (required)
MOV     TA,#0AAH    ;Write trigger command sequence 1
```

```
                                ;No other instructions here
MOV     TA,#55H                 ;Write trigger command sequence 2
                                ;No other instructions here
MOV     DPS,#xxH                ;Write protection is temporarily disabled and any value can be
                                ;written to DPS
                                ;Write protection state of DSP again
SETB    EA                      ;Open interruptions (if necessary)
```

22.1 Sample program

22.1.1 Example code 1

Reversely copy the 4-byte data in program space 1000H to 1003H to 0100H to 0103H in the expansion RAM, that is

C:1000H -> X:0103H
C:1001H -> X:0102H
C:1002H -> X:0101H
C:1003H -> X:0100H

Assembly code

```
        ORG     0000H
        LJMP    MAIN

        ORG     0100H
MAIN:
        MOV     SP, #3FH

        MOV     DPS,#00100000B          ;Enable TSL and select DPTR0
        MOV     DPTR,#1000H             ;Write 1000H to DPTR0. Select DPTR1 as DPTR after the execution
                                        ;is completed.
        MOV     DPTR,#0103H             ;Write 0103H to DPTR1
        MOV     DPS,#10111000B          ;Set DPTR1 to decrement mode, DPTR0 to decrement mode, enable
                                        ;       TSL and AU0 and AU1, and select DPTR0 as the current
DPTR
        MOV     R7,#4                   ;Setting the number of data replication
COPY_NEXT:
        CLR     A                       ;
        MOVC    A,@A+DPTR               ;Reading data from the program space pointed to by DPTR0,
                                        ;After completion, DPTR0 is automatically incremented by 1 and
                                                        ;DPTR1 is set to the next target DPTR.
        MOVX    @DPTR,A                 ;Write ACC data to XDATA pointed to by DPTR1,
                                        ;DPTR1 is automatically decremented after completion and DPTR0
                                                ;is set to the next target DPTR
        DJNZ    R7,COPY_NEXT            ;

        SJMP    $

        END
```

22.1.2 Example code 2

Send data from 0100H to 0103H in the expansion RAM to the P0 port in sequence

Assembly code

```
        ORG     0000H
        LJMP    MAIN

        ORG     0100H
MAIN:
        MOV     SP, #3FH

        CLR     EA                      ;close interrupt
        MOV     TA,#0AAH                ;Write DPS write protection trigger command 1
        MOV     TA,#55H                 ;Write to DPS write protection trigger command 2
        MOV     DPS,#00001000B          ;DPTR0 increment, enable AU0 alone, and select DPTR0
        SETB    EA                      ;Open interrupt
        MOV     DPTR,#0100H             ;Write 0100H to DPTR0
        MOVX    A,@DPTR                 ;Read data from the XRAM pointed to by DPTR0 and DPTR0 is
                                                ;automatically incremented after completion
        MOV     P0,A                    ;Data output to P0 port
        MOVX    A,@DPTR                 ;Read data from the XRAM pointed to by DPTR0 and DPTR0 is
                                                ;automatically incremented after completion
        MOV     P0,A                    ;Data output to P0 port
        MOVX    A,@DPTR                 ;Read data from the XRAM pointed to by DPTR0 and DPTR0 is
                                                ;automatically incremented after completion
        MOV     P0,A                    ;Data output to P0 port
        MOVX    A,@DPTR                 ;Read data from the XRAM pointed to by DPTR0 and DPTR0 is
                                                ;automatically incremented after completion
        MOV     P0,A                    ;Data output to P0 port

        SJMP    $

        END
```

Appendix A Application Considerations

A.1 Important notes on EEPROM programming and erase wait times

Table 1(STC8A Series and STC8F Series EEPROM Operation Time Requirements)

EEPROM operation	shortest time	longest time
programming	6us	7.5us
abrasion	4ms	6ms

Table 2(STC8A Series and STC8F Series EEPROM Operation Wait Time Waiting for Parameters)

IAP_WT[2:0]			Programming waiting clock	Erasing waiting clocks	Suitable frequency
1	1	1	7 clocks	5000 clocks	1MHz
1	1	0	14 clocks	10000 clocks	2MHz
1	0	1	21 clocks	15000 clocks	3MHz
1	0	0	42 clocks	30000 clocks	6MHz
0	1	1	84 clocks	60000 clocks	12MHz
0	1	0	140 clocks	100000 clocks	20MHz
0	0	1	168 clocks	120000 clocks	24MHz
0	0	0	301 clocks	215000 clocks	30MHz

The programming and erase wait time of the internal EEPROM of the STC8A series and STC8F series MCUs must meet the requirements in Table I. The waiting time should not be too short or too long.

The programming wait time must be between 6 μ s and 7.5 μ s. If the programming wait time is too small (less than the minimum time of 6 μ s), the data inside the programmed target memory unit may be unreliable (the data retention period may not reach 25 years). If the waiting time is too long (more than 1.5 times the maximum time of 7.5us, ie more than 11.25us), the data written may also be incorrect due to data interference. In order to ensure the waiting time for programming, and after the completion of programming, data reading and comparison verification are performed. If the verification is correct, the data will be correctly programmed.

The erase wait time must be between 4ms and 6ms, and the erase wait time is too small (less than the shortest time 4ms), then the erased target memory sector may not be erased cleanly; if the wait time is too long (greater than the maximum A long time of 1.5 times 6ms (ie, more than 9ms) will shorten the life of the EEPROM, that is, the erase life of the original 100,000 times may be shortened to 50,000 times.

The waiting time for programming and erasing should be properly selected according to the recommended frequency given in Table 2. If the operating frequency is 12MHz, please set the waiting parameter to 011B according to Table 2. If the actual operating frequency of the CPU is not in Table 2 The list of recommended frequencies needs to be calculated based on the actual frequency and the actual number of waiting clocks in Table 2 to find out the waiting time parameters that satisfy the time requirements of Table 1.

For example: the operating frequency is 4MHz, if you choose to wait for the parameter is 101B, the programming time is 21/4MHz = 5.25us, the erase time is 15000/4MHz = 3.75ms, the time is obviously not enough, so you should choose to wait for the parameter is 100B, then programming The time is 42/4MHz = 10.5us, the erase time is 30000/4MHz = 7.5ms, and the time is between the shortest time and 1.5 times the longest time.

Note: The clock that the EEPROM waits for operation refers to the system clock after the main clock is divided, that is, the actual working clock of the CPU. If the microcontroller uses an internal high-precision IRC, then the EEPROM is waiting for the operating clock to use the ISP download software download frequency after adjustment; If the microcontroller uses an external crystal, the EEPROM waits for the operating clock is the external crystal frequency through the CLKDIV register points After the clock (for example, if the microcontroller uses an external crystal and the frequency of the external crystal is 24MHz and the value of the CLKDIV register is set to 4, the clock frequency of the EEPROM waiting for the operation is 24MHz/4 = 6MHz. At this time, the waiting parameter should be 100B. , but can't choose 001B).

The following table shows the wrong parts of the previous version.

IAP_WT[2:0]			Read byte (2 clocks)	~~Write Bytes(about 55us)~~	~~Erase sector(about 21ms)~~	clock frequency
1	1	1	2 clocks	~~55 clocks~~	~~21012 clocks~~	1MHz
1	1	0	2 clocks	~~110clocks~~	~~42024 clocks~~	2MHz
1	0	1	2 clocks	~~165 clocks~~	~~63036 clocks~~	3MHz
1	0	0	2 clocks	~~330 clocks~~	~~126072 clocks~~	6MHz
0	1	1	2 clocks	~~660 clocks~~	~~252144 clocks~~	12MHz
0	1	0	2 clocks	~~1100 clocks~~	~~420240 clocks~~	20MHz
0	0	1	2 clocks	~~1320 clocks~~	~~504288 clocks~~	24MHz
0	0	0	2 clocks	~~1760 clocks~~	~~672384 clocks~~	30MHz

The following table is correct parameters after modifying the previous error.

IAP_WT[2:0]			Read byte (2 clocks)	**Write Bytes (about 6～7.5us)**	**Erase sector (about 4～6ms)**	clock frequency
1	1	1	2 clocks	**7 clocks**	**5000 clocks**	1MHz
1	1	0	2 clocks	**14 clocks**	**10000 clocks**	2MHz
1	0	1	2 clocks	**21 clocks**	**15000 clocks**	3MHz
1	0	0	2 clocks	**42 clocks**	**30000 clocks**	6MHz
0	1	1	2 clocks	**84 clocks**	**60000 clocks**	12MHz
0	1	0	2 clocks	**140 clocks**	**100000 clocks**	20MHz
0	0	1	2 clocks	**168 clocks**	**120000 clocks**	24MHz
0	0	0	2 clocks	**301 clocks**	**215000 clocks**	30MHz

A.2 STC8F2K64S4 Series Application Notes

A.2.1 Important description of STC8F2K64S4 Series D Chip 1

When all serial ports (including serial port 1, serial port 2, serial port 3, and serial port 4) send serial port data to the serial port sender, the following settings must be made on the

sender port: (One of three methods is optional)

A.2.1.1 Set the I/O port to standard bi-directional mode and turn on the internal pull-up resistor

A.2.1.2 Set I/O port to standard bi-directional port mode and connect 3~10K pull-up resistor

A.2.1.3 Set the I/O port to push-pull mode

A.2.2 Important explanation of STC8F2K64S4 Series D Chip 2

When setting the ninth bit (TB8) of the transmission data in Mode 2 and Mode 3 of the serial port 1, it is necessary to set it twice in succession to be valid. Serial port 2, serial port 3, and serial port 4 do not have this problem.

A.2.3 STC8F2K64S4 Series C Edition Chip Important Notes

A.2.3.1 When all the serial ports (including serial port 1, serial port 2, serial port 3, and serial port 4) send serial port data, the send ports need to be set to open-drain mode and open internal pull-up resistors or external 3 to 10K. Pull-up resistor.

A.2.3.2 All I/O ports that are input only, it is recommended to set it to high impedance / input mode only, and open the internal pull-up resistor / 4.2K, or pull, can also be used on the weak traditional 8051 Pull mode to read the external state, as long as the external is set to "1" state, it can be used as input, but the new 8051 has a better high impedance / input mode mode only.

A.2.3.3 For all I/O ports that are output only, it is recommended that they be set to open-drain mode and open the internal pull-up resistor/4.2K, or an external pull-up resistor of 5 to 10K.

A.2.3.3.1 A：To output “1” externally, just set “1” externally. At this time, the internal pull-up resistor/4.2K is already open, or the external pull-up resistor is connected to 5~10K;

A.2.3.3.2 B：To output “0” externally, just clear “0” externally, and then turn off the internal pull-up resistor to reduce power consumption<5V/4.2K = 1.2mA, 3.3V/4.2K = 0.78mA>

A.2.3.4 For all I/O ports that are both input and output, it is recommended to set it to open-drain mode and open the internal pull-up resistor/4.2K, or an external pull-up resistor of 5 to 10K.

A.2.3.4.1 A：As an input, it is necessary to externally output "1" status. At this time, an internal pull-up resistor/4.2K is already turned on, or an external pull-up resistor of 5 to 10K is connected, and the 8051 P0 port is used;

A.2.3.4.2 B：To output “1” externally, just set “1” externally. At this time, the internal pull-up resistor/4.2K is already open or the external pull-up resistor is connected to 5~10K;

A.2.3.4.3 C: To output “0” externally, it is only necessary to clear “0” externally. At this time, the internal pull-up resistor can be turned off again to reduce power consumption<5V/4.2K = 1.2mA, 3.3V/4.2K = 0.78mA>

Open P0 port internal pull-up 4.2K resistor register address，P0PU, 0xFE10

Open P1 port internal pull-up 4.2K resistor register address，P1PU, 0xFE11

Open P2 port internal pull-up 4.2K resistor register address，P2PU, 0xFE12

Open P3 port internal pull-up 4.2K resistor register address，P3PU, 0xFE13

Open P4 port internal pull-up 4.2K resistor register address，P4PU, 0xFE14
Open P5 port internal pull-up 4.2K resistor register address，P5PU, 0xFE15
Open P6 port internal pull-up 4.2K resistor register address，P6PU, 0xFE16
Open P7 port internal pull-up 4.2K resistor register address，P7PU, 0xFE17

```
//The following special function registers are located in the expansion RAM area
//To access these registers, first set P_SW2's BIT7 to 1 to read and write normally.
#define P0PU        (*(unsigned char volatile xdata *)0xfe10)
#define P1PU        (*(unsigned char volatile xdata *)0xfe11)
#define P2PU        (*(unsigned char volatile xdata *)0xfe12)
#define P3PU        (*(unsigned char volatile xdata *)0xfe13)
#define P4PU        (*(unsigned char volatile xdata *)0xfe14)
#define P5PU        (*(unsigned char volatile xdata *)0xfe15)
#define P6PU        (*(unsigned char volatile xdata *)0xfe16)
#define P7PU        (*(unsigned char volatile xdata *)0xfe17)
```

A.2.4 STC8F2K64S4-LQFP44/LQFP32 version B chip, sample delivery, samples have the following issues：(All problems will be corrected in the C version of the chip)

======Serial port receiving requires 2 stop bits (including serial port 1, serial port 2, serial port 3, and serial port 4). How to solve in the system, if the sender is not an STC SCM, such as a 32-bit CPU/GPU/DSP, their UART transmission stops. Bits often have a 1-bit/1.5-bit/2-bit selection. The 2-bit stop bit can be selected directly. If the STC is a mass production type single-chip microcomputer, there is only one stop bit after the completion of the transmission and it takes a waiting bit time to wait. Send it again, but this version of the STC8F2K64S4 (version B) also makes a fixed 2 stop bits when sending, and it will change back to a stop bit in the next version.

======When the serial port 1 uses the timer 1 working in mode 2 as the baud rate generator of the serial port, the SMOD (PCON.7) bit must be set, that is, the baud rate must be doubled to make the serial port 1 work normally, otherwise the baud rate Incorrect. If Timer 2 or Timer 1 operating in Mode 0 is used as the serial baud rate generator, this is not a problem.

======When the user uses the special function register (XSFR) of the extended RAM area, the data is also written to the last 512-byte area of 2K bytes of the internal expansion RAM. If the user does not have external SRAM, the EXRAM can be set before accessing the XSFR. 1. After the completion of the access, set EXTRAM to 0 so that the XSFR can be correctly accessed without affecting the use of the internal expansion RAM.

======For STC8F2K series chips with firmware version 7.3.5U and earlier, when using the emulation function, the internal expansion RAM can only use 1K (0000H ~ 03FFH), that is, the simulation reserved area is (0400H ~ 07FFH), and the firmware version is For the STC8F2K series chips with 7.3.6U and newer firmware versions, when using the emulation function, the internal expansion RAM can use 1.25K (0000H ~ 04FFH), that is, the simulation reserved area is (0500H ~ 07FFH).

A.3 STC8F2K64S2 Series Application Notes

1. Important description of STC8F2K64S2 Series D Chip 1

When the serial port sending end of all serial ports (including serial port 1, serial port 2, serial port 3, and serial port 4) sends serial port data, the following settings must be made on the sending port:

(one of three modes is optional).

a. Set the I/O port to standard bi-directional mode and turn on the internal pull-up resistor

b. Set I/O port to standard bi-directional port mode and connect 3~10K pull-up resistor

c. Set the I/O port to push-pull mode

2. Important explanation of STC8F2K64S2 Series D Chip 2

When setting the ninth bit (TB8) of the transmission data in Mode 2 and Mode 3 of the serial port 1, it is necessary to set it twice in succession to be valid. Serial 2, Serial 3, and Serial 4 None

3. Important explanation of STC8F2K64S2 Series C Chip

a. When the serial port sender of all serial ports (including serial port 1, serial port 2, serial port 3, and serial port 4) sends serial port data, the transmit port requires software to be set to open-drain mode and turn on the internal pull-up resistor or an external 3 to 10K pull-up resistor.

b. All I/O ports that are input only, it is recommended to set it to high impedance / input mode only, and open the internal pull-up resistor / 4.2K, or pull, can also be used on the weak traditional 8051 Pull mode to read the external state, as long as the external is set to "1" state, it can be used as input, but the new 8051 has a better high impedance / input mode mode only.

c. For all I/O ports that are output only, it is recommended that they be set to open-drain mode and open the internal pull-up resistor/4.2K, or an external pull-up resistor of 5 to 10K.

1. A：To output “1” externally, just set “1” externally. At this time, the internal pull-up resistor/4.2K is already open or the external pull-up resistor is connected to 5~10K;

2. B：To output “0” externally, just clear “0” externally, and then turn off the internal pull-up resistor to reduce power consumption.<5V/4.2K = 1.2mA, 3.3V/4.2K = 0.78mA>

d. For all I/O ports that are both input and output, it is recommended to set it to open-drain mode and open the internal pull-up resistor/4.2K, or an external pull-up resistor of 5 to 10K.

1. A：As an input, it is necessary to externally output "1" status. At this time, an internal pull-up resistor/4.2K is already turned on, or an external pull-up resistor of 5 to 10K is connected, and the 8051 P0 port is used;

2. B：To output “1” externally, just set “1” externally. At this time, the internal pull-up resistor/4.2K is already open, or the external pull-up resistor is connected to 5~10K;

3. C: To output “0” externally, just clear “0” externally, and then turn off the internal pull-up resistor to reduce power consumption.<5V/4.2K = 1.2mA, 3.3V/4.2K = 0.78mA>

Open P0 port internal pull-up 4.2K resistor register address，P0PU, 0xFE10
Open P1 port internal pull-up 4.2K resistor register address，P1PU, 0xFE11
Open P2 port internal pull-up 4.2K resistor register address，P2PU, 0xFE12
Open P3 port internal pull-up 4.2K resistor register address，P3PU, 0xFE13
Open P4 port internal pull-up 4.2K resistor register address，P4PU, 0xFE14
Open P5 port internal pull-up 4.2K resistor register address，P5PU, 0xFE15
Open P6 port internal pull-up 4.2K resistor register address，P6PU, 0xFE16
Open P7 port internal pull-up 4.2K resistor register address，P7PU, 0xFE17

```
//The following special function registers are located in the expansion RAM area
//To access these registers, first set P_SW2's BIT7 to 1 to read and write normally.
#define P0PU        (*(unsigned char volatile xdata *)0xfe10)
```

```
#define P1PU        (*(unsigned char volatile xdata *)0xfe11)
#define P2PU        (*(unsigned char volatile xdata *)0xfe12)
#define P3PU        (*(unsigned char volatile xdata *)0xfe13)
#define P4PU        (*(unsigned char volatile xdata *)0xfe14)
#define P5PU        (*(unsigned char volatile xdata *)0xfe15)
#define P6PU        (*(unsigned char volatile xdata *)0xfe16)
#define P7PU        (*(unsigned char volatile xdata *)0xfe17)
```

A.4 STC8A8K64S4A12 Series Application Notes

1. **Important description of STC8A8K64S4A12 Series F Chip 1**

When all serial ports (including serial port 1, serial port 2, serial port 3, and serial port 4) send serial port data to the serial port sender, the following settings must be made on the sender port: (One of three methods is optional)

a. **Set the I/O port to standard bi-directional mode and turn on the internal pull-up resistor**

b. **Set I/O port to standard bi-directional port mode and connect 3~10K pull-up resistor**

c. **Set the I/O port to push-pull mode**

2. **Important explanation of STC8A8K64S4A12 Series F Chip 2**

When setting the ninth bit (TB8) of the transmission data in Mode 2 and Mode 3 of the serial port 1, it is necessary to set it twice in succession to be valid. Serial port 2, serial port 3, and serial port 4 do not have this problem.

3. Important description of TC8A8K64S4A12 Series E Chip

a. All ports on the serial port (including serial port 1, serial port 2, serial port 3, and serial port 4) require software to be set to open-drain mode and turn on internal pull-up resistors or an external 3 to 10K pull-up resistor.

b. All I/O ports that are input only, it is recommended to set it to high impedance / input mode only, and open the internal pull-up resistor / 4.2K, or pull, can also be used on the weak traditional 8051 Pull mode to read the external state, as long as the external is set to "1" state, it can be used as input, but the new 8051 has a better high impedance / input mode mode only.

c. For all I/O ports that are output only, it is recommended that they be set to open-drain mode and open the internal pull-up resistor/4.2K, or an external pull-up resistor of 5 to 10K.

1. A, To output “1” externally, just set “1” externally. At this time, the internal pull-up resistor/4.2K is already open or the external pull-up resistor is connected to 5~10K.
2. B, To output “0” externally, just clear “0” externally, and then turn off the internal pull-up resistor to reduce power consumption.<5V/4.2K = 1.2mA, 3.3V/4.2K = 0.78mA>

d. All I/O ports to be both input and output. It is recommended to set it to open-drain mode and turn on the newly added pull-up resistor/4.2K, or an external pull-up of 5 to 10K. resistance.

1. A, As an input, it is necessary to externally output "1" status. At this time, an internal pull-up resistor/4.2K is already turned on, or an external pull-up resistor of 5 to 10K is connected, and the 8051 P0 port is used.
2. B, To output “1” externally, just set “1” externally. At this time, the internal pull-up resistor/4.2K is already open, or the external pull-up resistor is connected to 5~10K.
3. C, To output “0” externally, it is only necessary to clear “0” externally. At this time,

the internal pull-up resistor can be turned off again to reduce power consumption.<5V/4.2K = 1.2mA, 3.3V/4.2K = 0.78mA>

Open P0 port internal pull-up 4.2K resistor register address，P0PU, 0xFE10
Open P1 port internal pull-up 4.2K resistor register address，P1PU, 0xFE11
Open P2 port internal pull-up 4.2K resistor register address，P2PU, 0xFE12
Open P3 port internal pull-up 4.2K resistor register address，P3PU, 0xFE13
Open P4 port internal pull-up 4.2K resistor register address，P4PU, 0xFE14
Open P5 port internal pull-up 4.2K resistor register address，P5PU, 0xFE15
Open P6 port internal pull-up 4.2K resistor register address，P6PU, 0xFE16
Open P7 port internal pull-up 4.2K resistor register address，P7PU, 0xFE17

```
//The following special function registers are located in the expansion RAM area.
//To access these registers, first set BIT7 of P_SW2 to 1 to read and write normally.
#define P0PU        (*(unsigned char volatile xdata *)0xfe10)
#define P1PU        (*(unsigned char volatile xdata *)0xfe11)
#define P2PU        (*(unsigned char volatile xdata *)0xfe12)
#define P3PU        (*(unsigned char volatile xdata *)0xfe13)
#define P4PU        (*(unsigned char volatile xdata *)0xfe14)
#define P5PU        (*(unsigned char volatile xdata *)0xfe15)
#define P6PU        (*(unsigned char volatile xdata *)0xfe16)
#define P7PU        (*(unsigned char volatile xdata *)0xfe17)
```

e. ADC related problems

1. Voltage difference between AVCC and VCC should be less than 0.3V
2. The software must set the corresponding ADC conversion port to input high impedance input mode or open drain.
3. To read 0, the ADC's conversion speed should use the fastest file.
4. When the ADC port is converted, some of the following ports are incorrectly set to high impedance by the IC. The software cannot be used or controlled. Do not use the port that has been mistakenly set as the high impedance input mode.
5. If ADC0/Channel 0 is used, the input port is P1.0 and P1.7 is set to high impedance by mistake. It is recommended to leave this port empty in the system. Do not use P1.7.
6. If ADC1/Channel 1 is used, the input port is P1.1. P0.0 is set to high impedance by mistake. It is recommended to leave this port empty in the system. Do not use P0.0.
7. If ADC2/Channel 2 is used, the input port is P1.2, P0.1 is set to high impedance by mistake. It is recommended to leave this port empty in the system. Do not use P0.1.
8. If ADC3/Channel 3 is used, the input port is P1.3. P0.2 is set to high impedance by mistake. It is recommended to leave this port empty in the system. Do not use P0.2.
9. If ADC4/Channel 4 is used, the input port is P1.4, and P0.3 is set to high impedance by mistake. It is recommended to leave this port empty in the system. Do not use P0.3.
10. If ADC5/Channel 5 is used, the input port is P1.5. P0.4 is set to high impedance by mistake. It is recommended to leave this port empty in the system. Do not use P0.4.
11. If ADC6/channel 6 is used, the input port is P1.6, P0.5 is set to high impedance by mistake. It is recommended to leave this port empty in the system. Do not use P0.5.

12. If ADC7/Channel 7 is used, the input port is P1.7, P0.6 is set to high impedance by mistake. It is recommended to leave this port empty in the system. Do not use P0.6.
13. If ADC8/Channel 8 is used, the input port is P0.0. P1.0 is set to high impedance by mistake. It is recommended to leave this port empty in the system. Do not use P1.0.
14. If ADC9/Channel 9 is used, the input port is P0.1, P1.1 is set to high impedance by mistake. It is recommended to leave this port empty in the system. Do not use P1.1.
15. If ADC10/Channel 10 is used, the input port is P0.2, and P1.2 is set to high impedance by mistake. It is recommended to leave this port empty in the system. Do not use P1.2.
16. If ADC11/channel 11 is used, the input port is P0.3, and P1.3 is set to high impedance by mistake. It is recommended to leave this port empty in the system. Do not use P1.3.
17. If ADC12/channel 12 is used, the input port is P0.4, P1.4 is set to high impedance by mistake. It is recommended to leave this port empty in the system. Do not use P1.4.
18. If ADC13/Channel 13 is used, the input port is P0.5, P1.5 is set to high impedance by mistake. It is recommended to leave this port empty in the system. Do not use P1.5.
19. If ADC14/channel 14 is used, the input port is P0.6, and P1.6 is set to high impedance by mistake. It is recommended to leave this port empty in the system. Do not use P1.6.
20. If ADC15/Channel 15 is used, the input is internal Vref/1.344V, and P1.7 is set to high impedance by mistake. It is recommended to leave this port empty in the system. Do not use P1.7.

4. STC8A8K64S4A12-LQFP64S/LQFP48/44 version D chip, sample delivery, samples have the following problems：(All problems will be corrected in the E version of the chip)

======Serial port receiving requires 2 stop bits (including serial port 1, serial port 2, serial port 3, and serial port 4). How to solve in the system, if the sender is not an STC SCM, such as a 32-bit CPU/GPU/DSP, their UART transmission stops. Bits often have a 1-bit/1.5-bit/2-bit selection. The 2-bit stop bit can be selected directly. If the STC is a mass production type single-chip microcomputer, there is only one stop bit after the completion of the transmission and it takes a waiting bit time to wait. Send it again, but this version of the STC8F2K64S4 (version B) also makes a fixed 2 stop bits when sending, and it will change back to a stop bit in the next version.

======When the serial port 1 uses the timer 1 working in mode 2 as the baud rate generator of the serial port, the SMOD (PCON.7) bit must be set, that is, the baud rate must be doubled to make the serial port 1 work normally, otherwise the baud rate Incorrect. If Timer 2 or Timer 1 operating in Mode 0 is used as the serial baud rate generator, this is not a problem.

======When the user uses the special function register (XSFR) of the extended RAM area, the data is also written to the last 512-byte area of 8K bytes of the internal expansion RAM. If the user does not have external SRAM, the EXRAM can be set before accessing the XSFR. 1. After the completion of the access, set EXTRAM to 0 so that the XSFR can be correctly accessed without affecting the use of the internal expansion RAM.

======12-bit 16-channel ADC up to 11.5 bits (ADC7), the ADC7 channel closest to the AGnd pin is the best, followed by ADC6/ADC5/ADC4/ADC3/ADC2/ADC1/ADC0, ADC14/ADC13/ADC12/ADC11/ADC10/ADC9 /ADC8, the ADC8 farthest away from the AGnd pin suggests that a 0.047uF - 0.1uF/0.2uF capacitor be used near the ADC input channel to the analog ground AGnd to reject the MCU's digital power and ground disturbances.

======For STC8A8K series and STC8F8K series chips with firmware version 7.3.5U and earlier, when using the emulation function, the internal expansion RAM can only use 3K (0000H ~ 0BFFH), that is, the simulation reserved area is (0C00H ~ 0FFFH). For STC8A8K series and STC8F8K

series chips whose firmware version is 7.3.6U, when using the emulation function, the internal expansion RAM can use 7.25K (0000H ~ 0CFFH), (1000H ~ 1FFFH), that is, the simulation reserved area is (0D00H ~ 0FFFH). For STC8A8K series and STC8F8K series chips with firmware version 7.3.7U and newer firmware version, when using the emulation function, the internal expansion RAM can use 7.25K (0000H ~ 1CFFH), that is, the simulation reserved area is (1D00H ~ 1FFFH).

A.5 STC8A4K64S2A12 Series Application Notes

1. Important description of STC8A4K64S2A12 Series F Chip 1

When all serial ports (including serial port 1, serial port 2, serial port 3, and serial port 4) send serial port data to the serial port sender, the following settings must be made on the sender port: (One of three methods is optional)

a. Set the I/O port to standard bi-directional mode and turn on the internal pull-up resistor

b. Set I/O port to standard bi-directional port mode and connect 3~10K pull-up resistor

c. Set the I/O port to push-pull mode

2. Important explanation of STC8A4K64S2A12 Series F Chip 2

When setting the ninth bit (TB8) of the transmission data in Mode 2 and Mode 3 of the serial port 1, it is necessary to set it twice in succession to be valid. Serial 2, Serial 3, and Serial 4 None

STC MCU

Appendix B STC Guide to the use of simulators

1. Installing the Keil version of the simulation driver

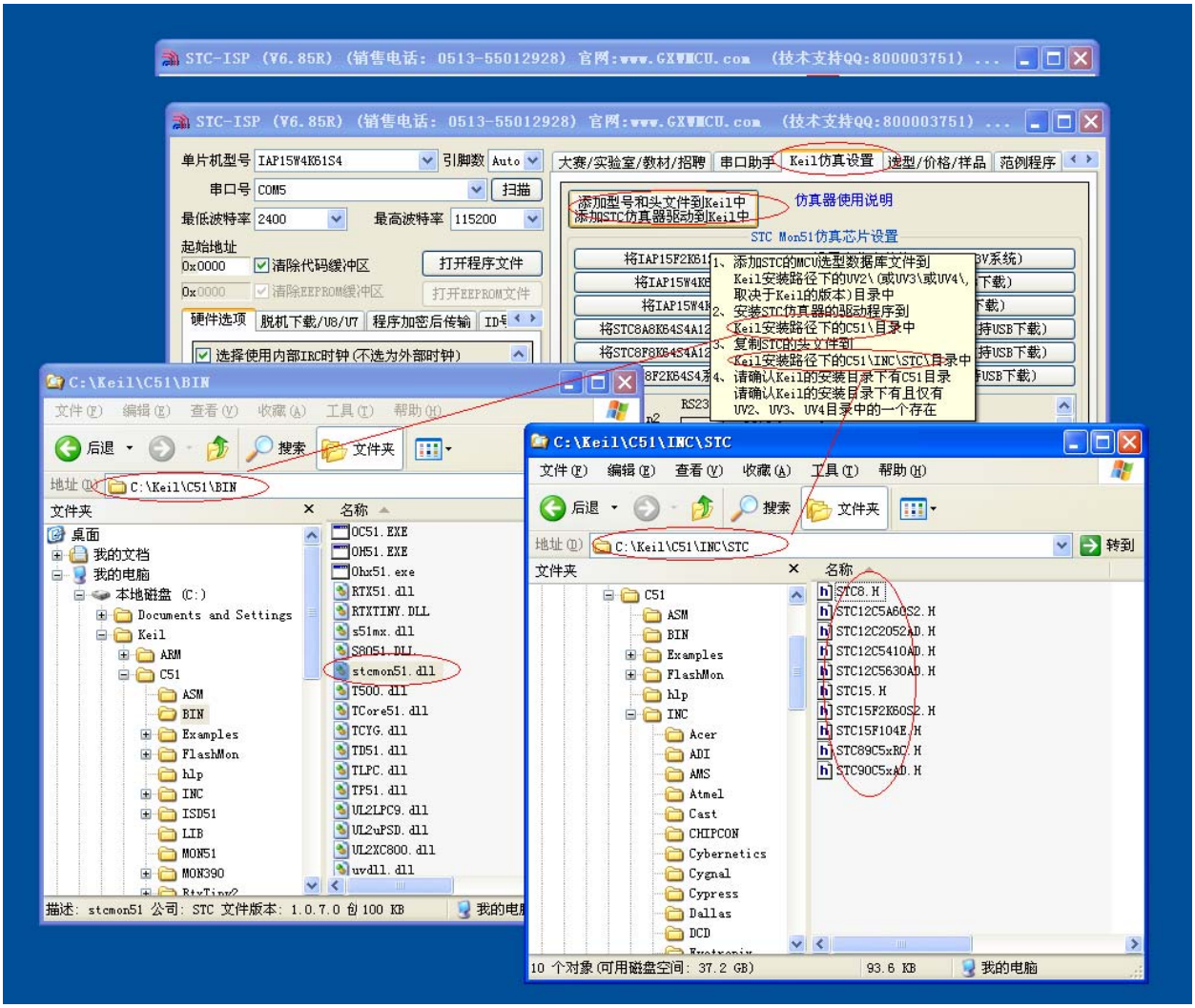

As shown above, first select "Keil simulation settings" page, click "Add MCU model to Keil", in the following directory selection window appears, locate the Keil installation directory (usually may be "C:\Keil\") , "OK" appears on the right side of the figure below shows the message that the installation was successful. Adding the header file also installs the STC Monitor51 emulation driver STCMON51.DLL. The driver and header files are installed in the directory as shown above.

2. Create a project in Keil

If the driver installation of the first step is successful, when selecting the chip model when creating a new project in Keil, there will be a choice of "STC MCU Database", as shown below

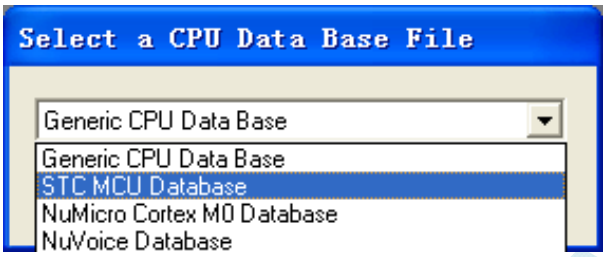

Then select the responding MCU model from the list. Here we select the model of "STC8A8K64S4A12" and click "OK" to complete the selection

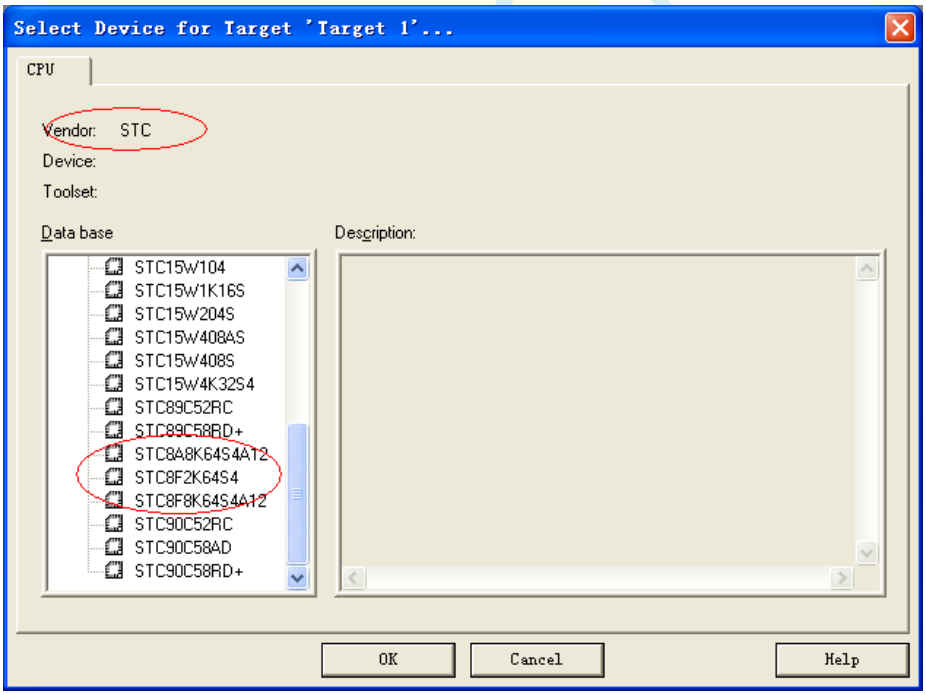

Add the source code file to the project, as shown below:

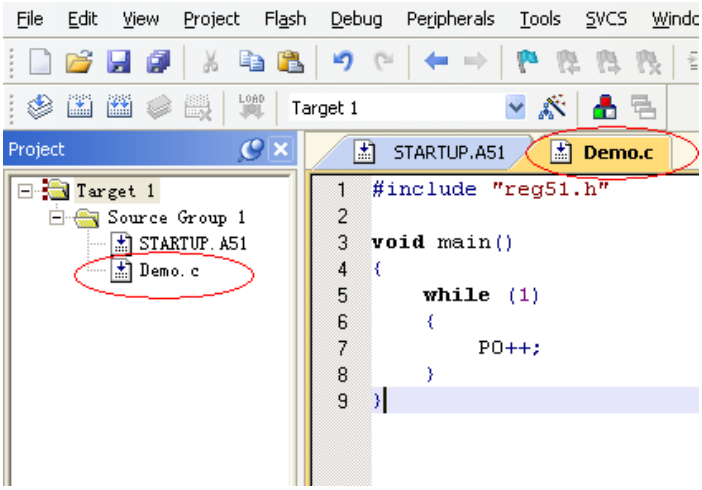

Save the project. If it is compiled correctly, you can set the following project.

An additional note:

When you create a C language project and add the startup file "STARTUP.A51" to your project, there is a macro definition named "IDATALEN". It is a macro that defines the size of IDATA. The default value is 128, which is hexadecimal 80H, and it is also the size of IDATA that needs to be initialized to 0 in the startup file. So when IDATA is defined as 80H, the code in STARTUP.A51 will initialize the RAM of IDATA's 00-7F to 0; also if IDATA is defined as 0FFH, the RAM of 00-FF of IDATA will be initialized to 0.

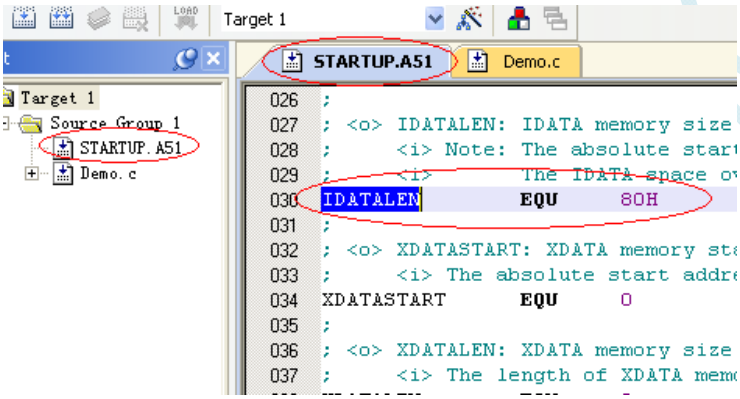

Although the IDATA size of the STC8 series microcontroller is 256 bytes (DATA of 00-7F and IDATA of 80H-FFH), there is a write ID number and related test parameters in the last 17 bytes of RAM if the user is Need to use this part of the data in the program, you must not define IDATALEN as 256.

3. Project Settings, Select STC Simulation Drive

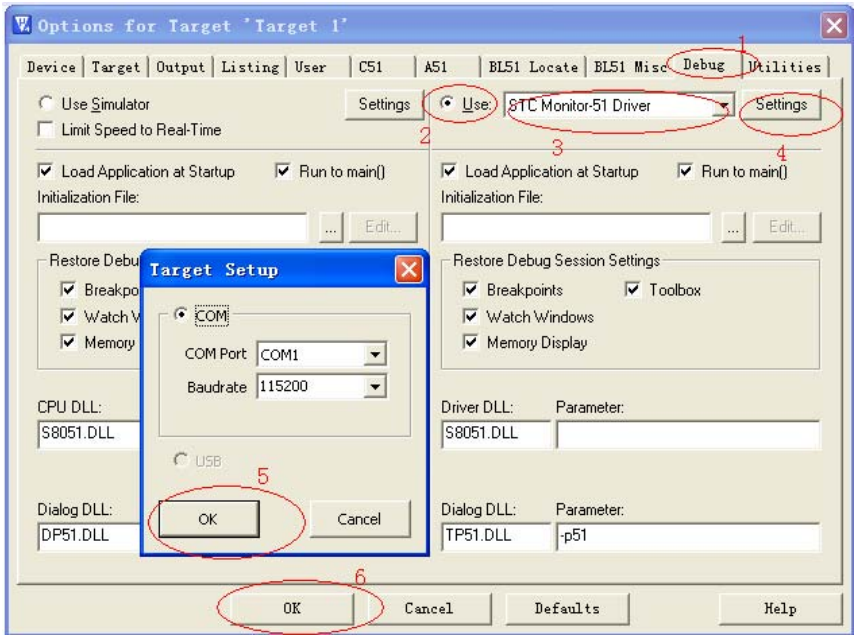

As shown above, first enter the project settings page, select the "Debug" settings page, the second step to select the right side of the hardware simulation "Use ...", the third step, in the simulation drive drop-down list, select "STC Monitor-51 Driver" Items, then click "Settings" button, enter the following setting screen, set the serial port number and baud rate, the baud rate is generally selected 115200. This setup is complete.

4. Create a simulation chip

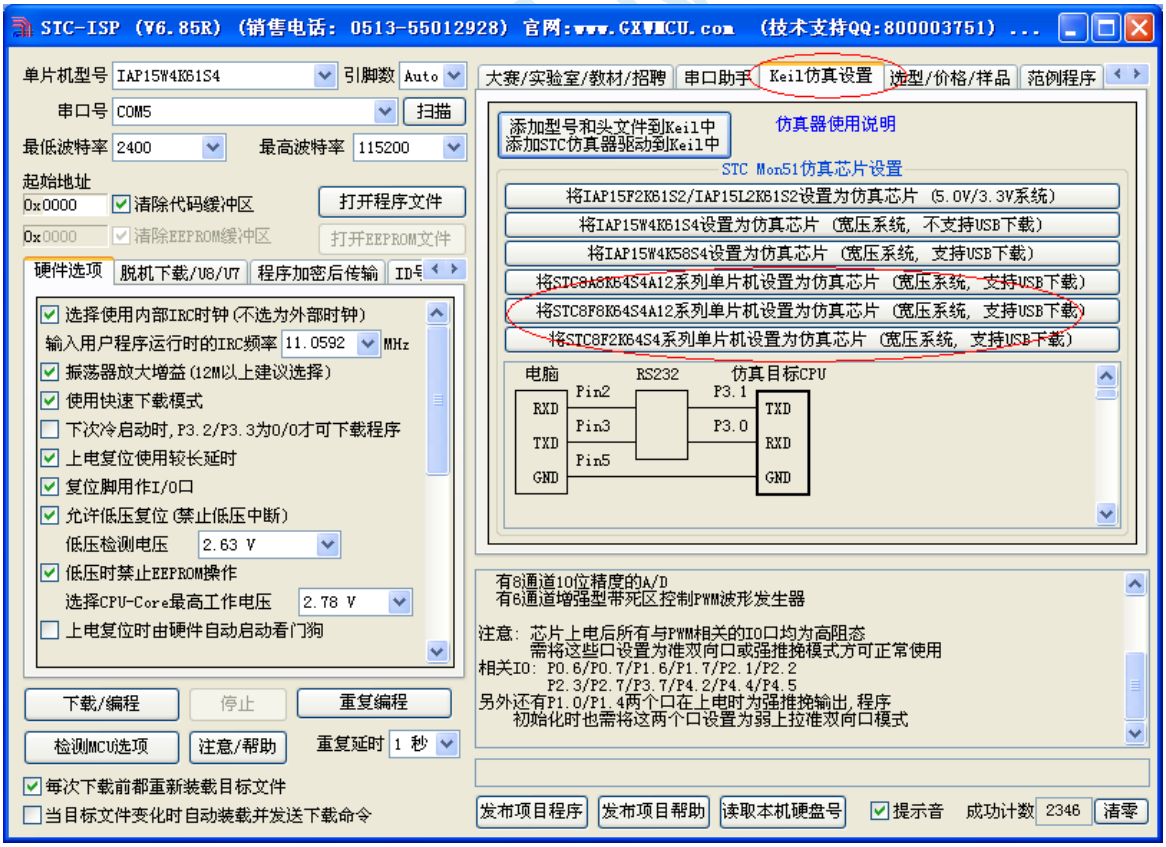

Prepare a STC8A series or STC8F series chip and connect it to the computer's serial port via the download

board. Then, as shown above, select the correct chip model, and then enter the "Keil simulation settings" page, click the corresponding model button, when the program is downloaded After the completion of the simulator is completed.

5. Start simulation

The completed simulation chip is connected to the computer through the serial port. After compiling the project we created earlier to no error, press "Ctrl+F5" to start debugging. If the hardware connection is correct, it will enter a debugging interface similar to the following, and the current simulation driver version number and the version number of the current emulation monitor code firmware are displayed in the command output window. A maximum of 20 breakpoints are allowed before the number of breakpoints is set (in theory, any number can be set, but setting too many breakpoints will affect the debugging speed).

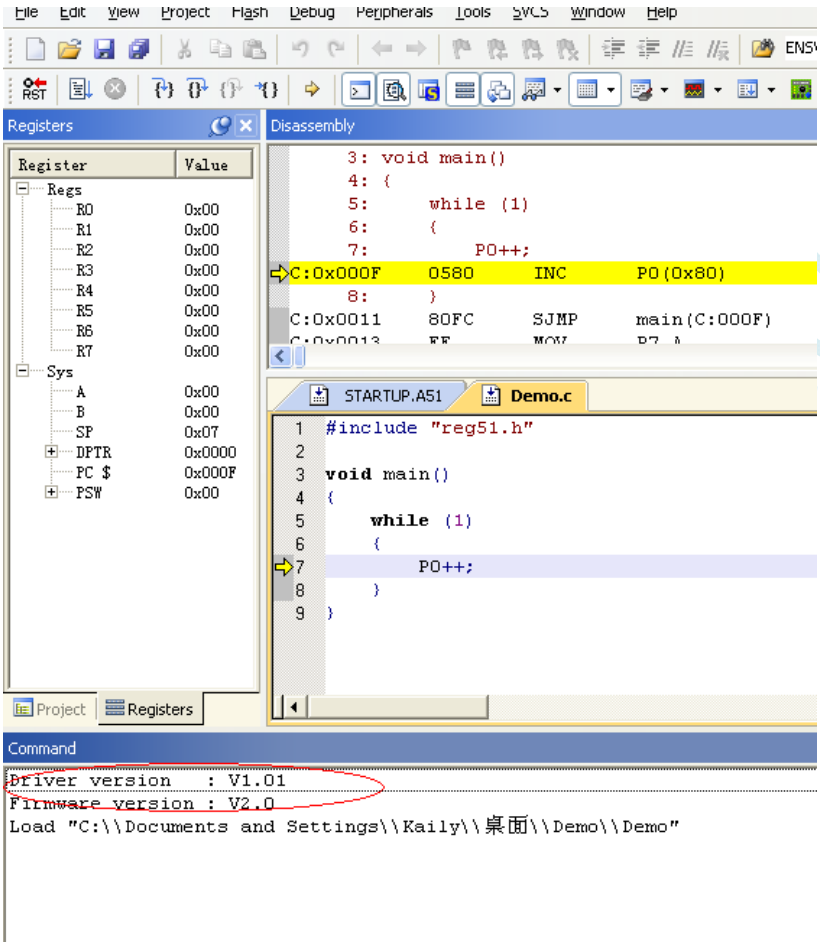

Appendix C STC-USB Driver installation instructions

● Windows XP installation method

Open STC-ISP download software version V6.79 (or later). The download software will automatically copy the driver files to the relevant system directory.

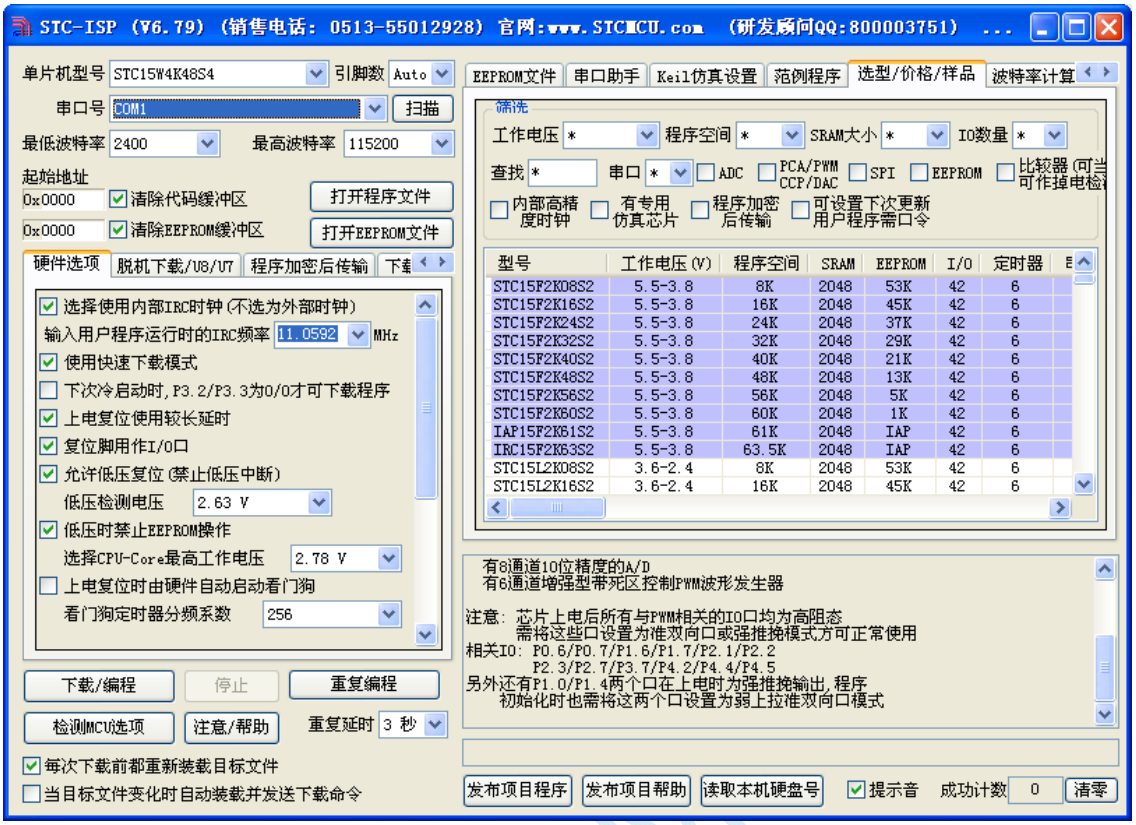

Insert the USB device, the system automatically pops up the following dialog box after finding the device, select the "No, not for now" item.

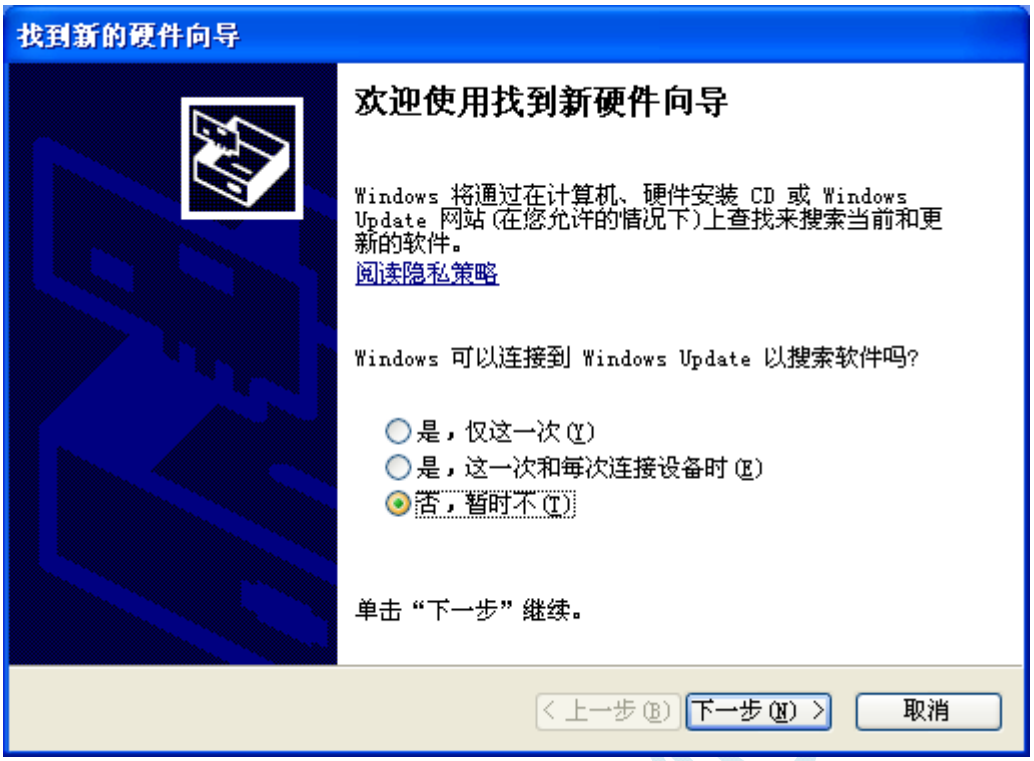

In the following dialog box, select the "Install the software automatically (Recommended)" item.

In the following dialog box that pops up, select the "still continue" button.

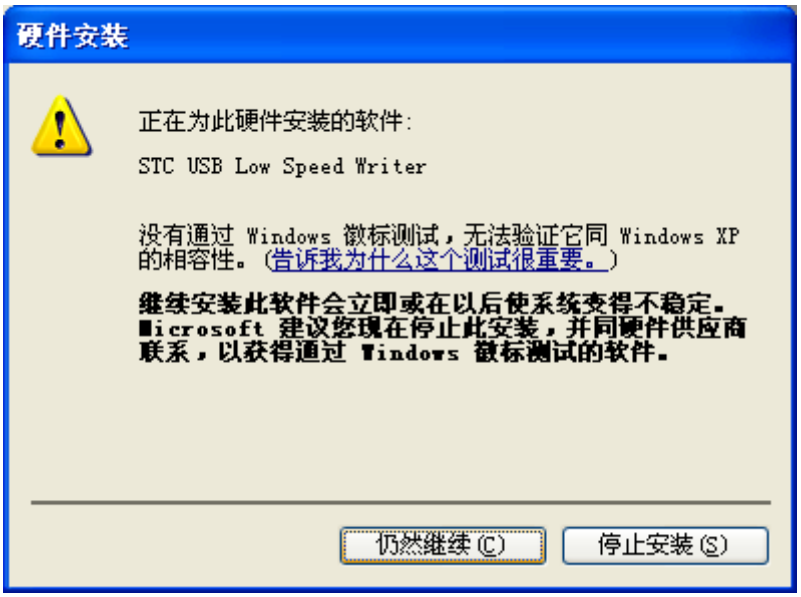

STC MCU

The system will automatically install the driver, as shown below.

The following dialog box appears indicating that the driver installation is complete.

At this time, the serial number list in the previously opened STC-ISP download software will automatically select the inserted USB device and display the device name as “STC USB Writer (USB1)”, as shown below:

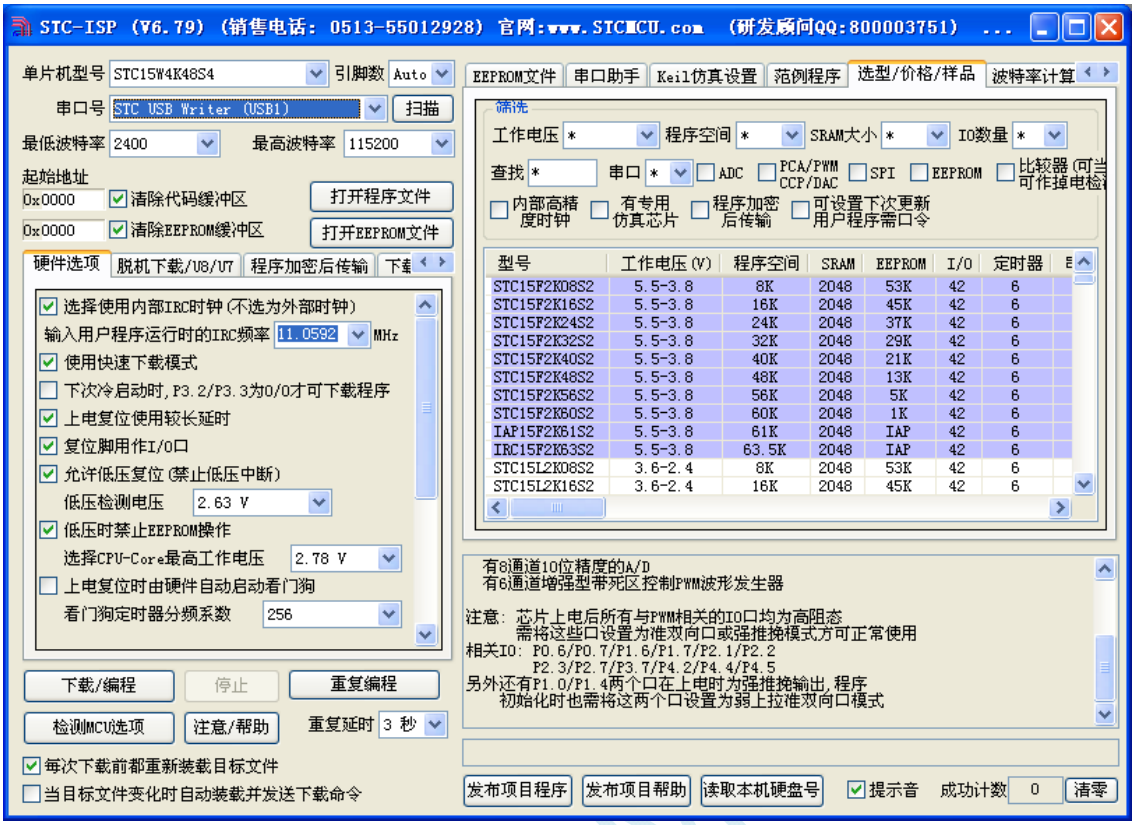

● Windows 7(32 bit)installation method

Open STC-ISP download software version V6.79 (or later). The download software will automatically copy the driver files to the relevant system directory.

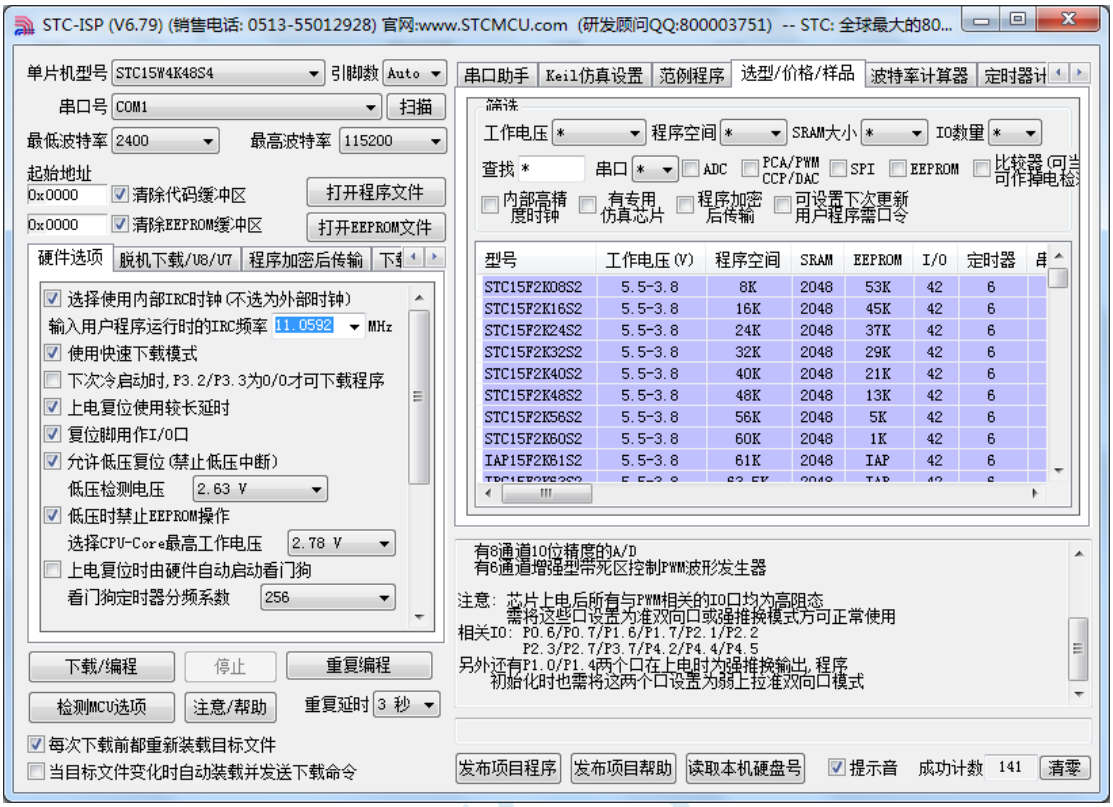

Insert the USB device and the system will automatically install the driver after it finds the device. After the installation is complete, the following prompt box will appear.

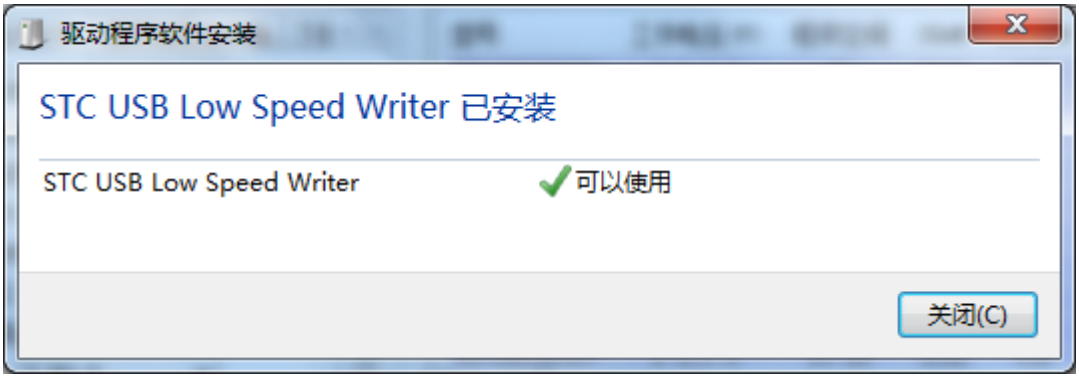

STC MCU

At this point, the serial number list in the previously opened STC-ISP download software will automatically select the inserted USB device and display the device name as "STC USB Writer (USB1)", as shown below:

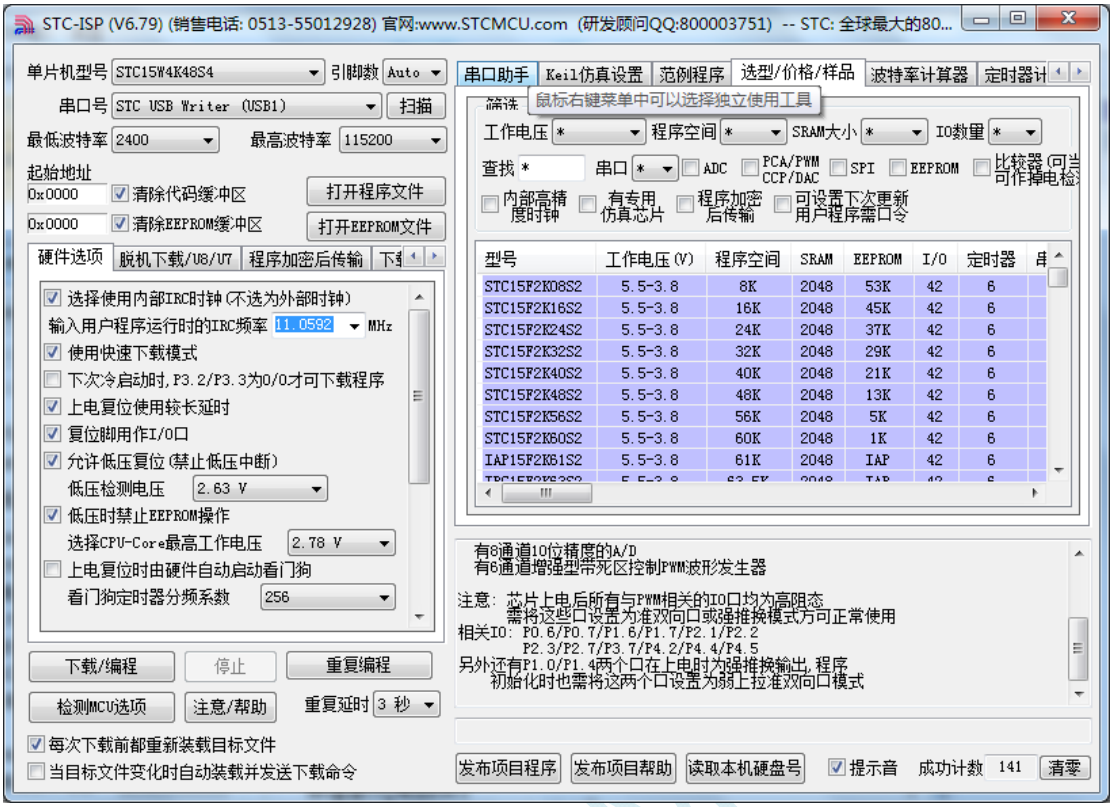

Note: If Windows 7 does not automatically install the driver, please refer to the installation method for Windows 8 (32-bit) for how to install the driver.

● Windows 7(64 bit)installation method

Because the Windows 7 64-bit operating system is in the default state, drivers that do not have digital signatures cannot be installed successfully. Therefore, before installing the STC-USB driver, you need to follow the steps below to temporarily skip the digital signature and install it successfully.

First restart the computer and keep pressing F8 until the following splash screen appears

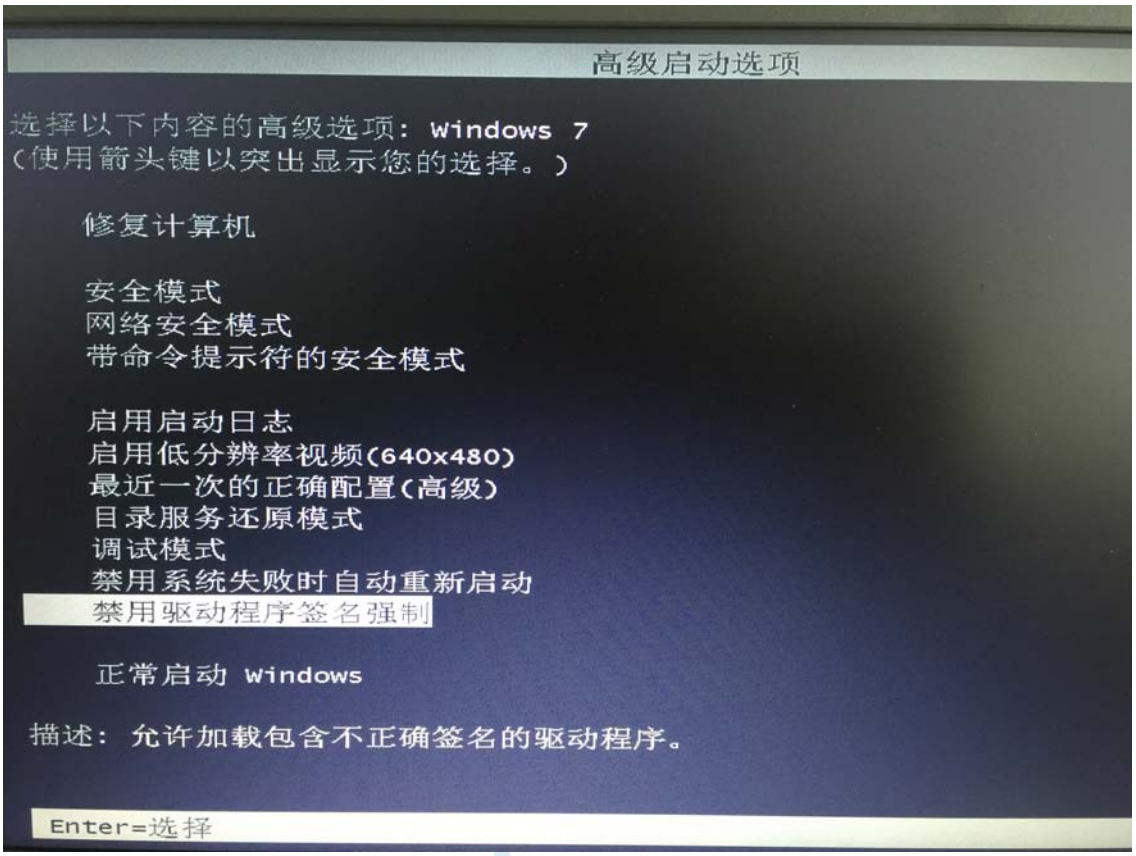

Select "Disable driver signature enforcement". After you start it, you can turn off the digital signature verification function temporarily.

Insert the USB device and open the Device Manager. Locate the USB device with a yellow exclamation mark in the device list. From the right-click menu of the device, select Update Driver Software.

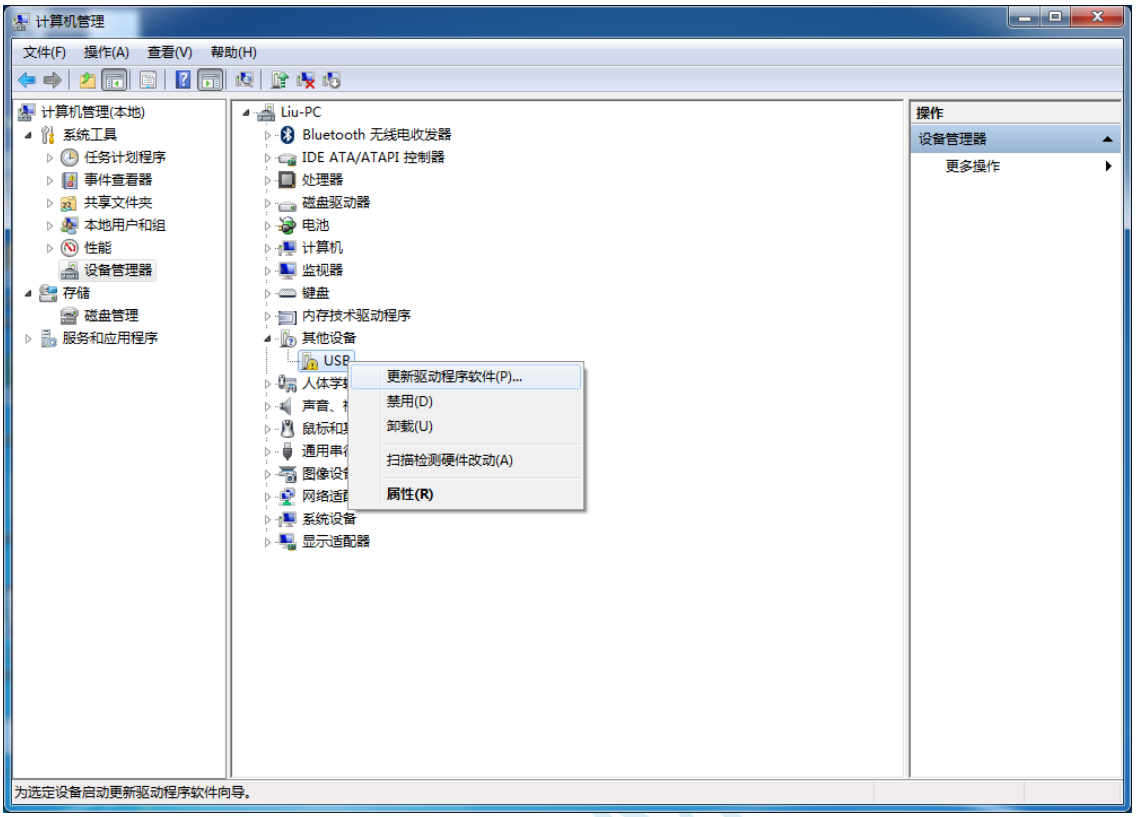

In the following dialog box, select "Browse my computer for driver software."

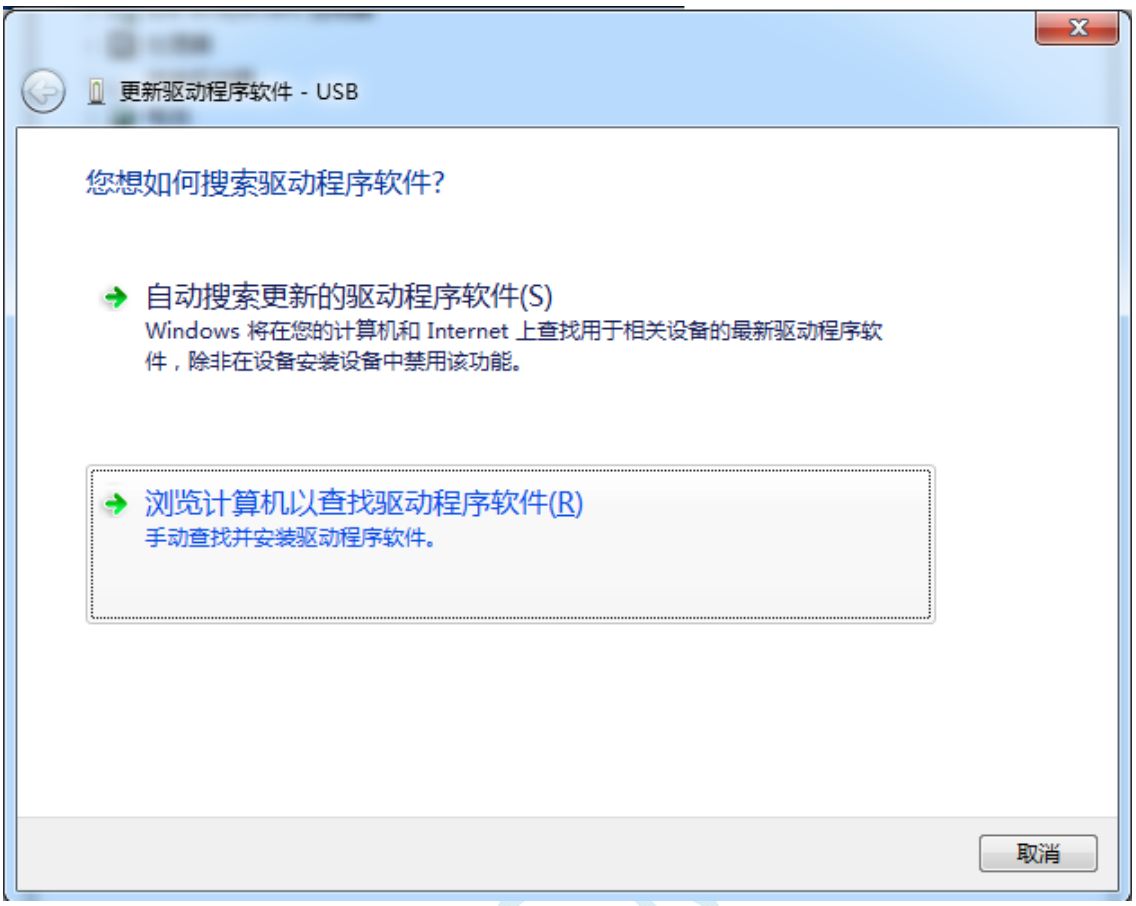

Click the "Browse" button in the dialog below to find the directory where the previous STC-USB driver was stored.(For example, the previous example directory is "D:\STC-USB", andThe user locates the path to the actual decompression directory.)

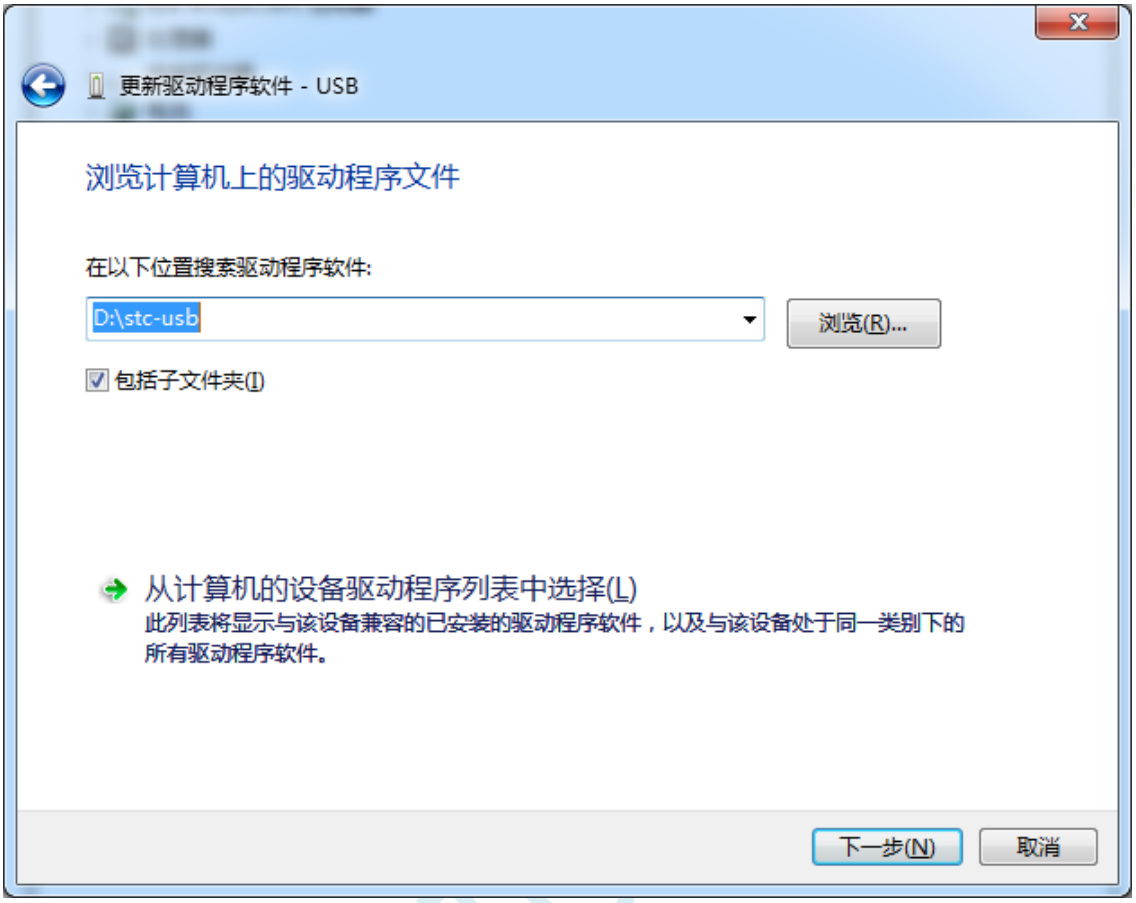

When the driver starts to install, the following dialog box will pop up and select "Always install this driver software".

STC MCU

Next, the system will automatically install the driver, as shown below.

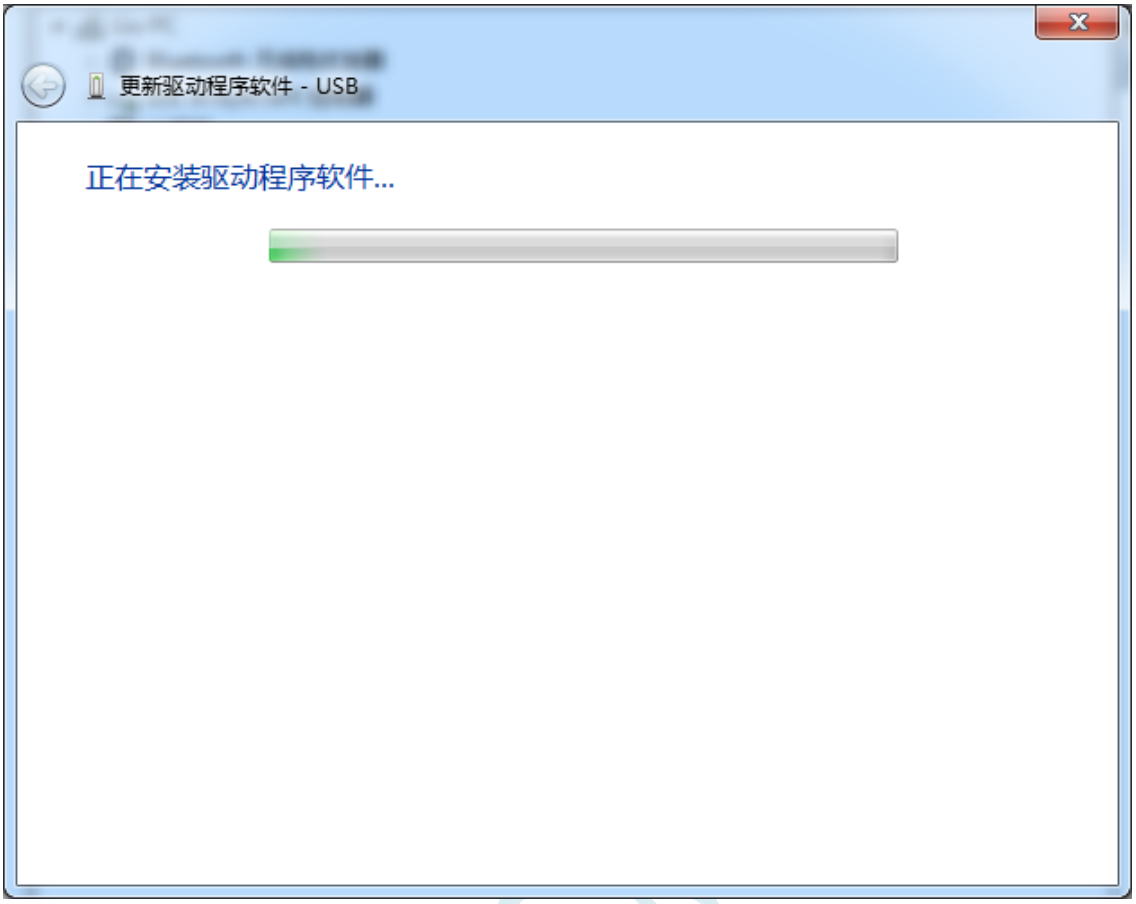

The following dialog box appears indicating that the driver installation is complete.

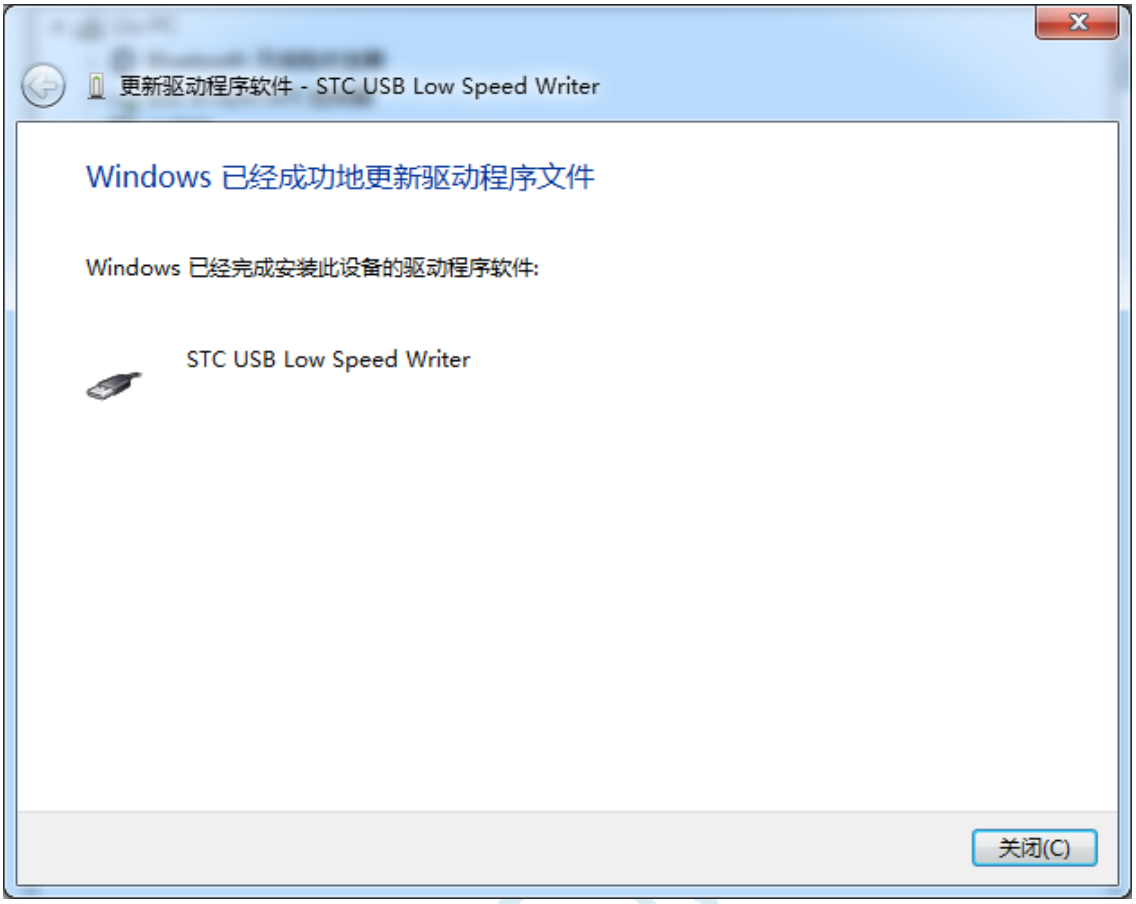

At this point in the device manager, the device with the yellow exclamation point before it will now display the device name "STC USB Low Speed Writer."

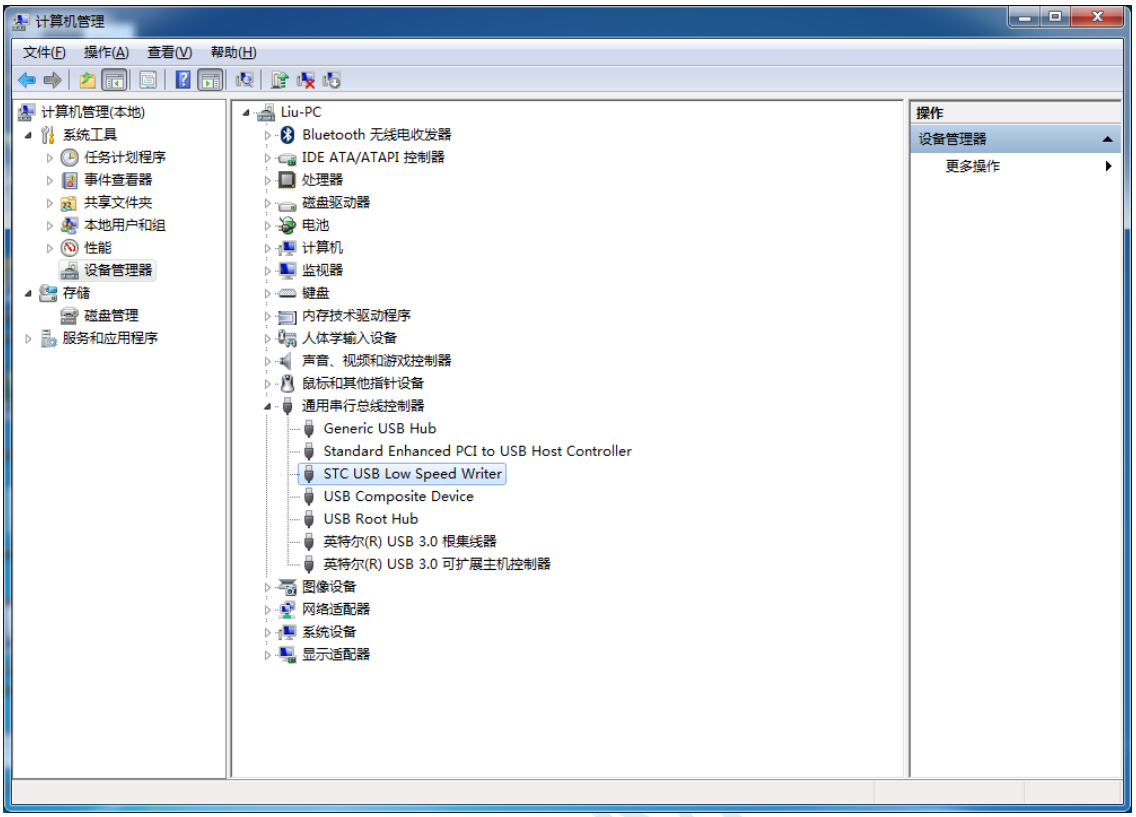

The serial port number list in the previously opened STC-ISP download software will automatically select the inserted USB device and display the device name as “STC USB Writer (USB1)”, as shown below:

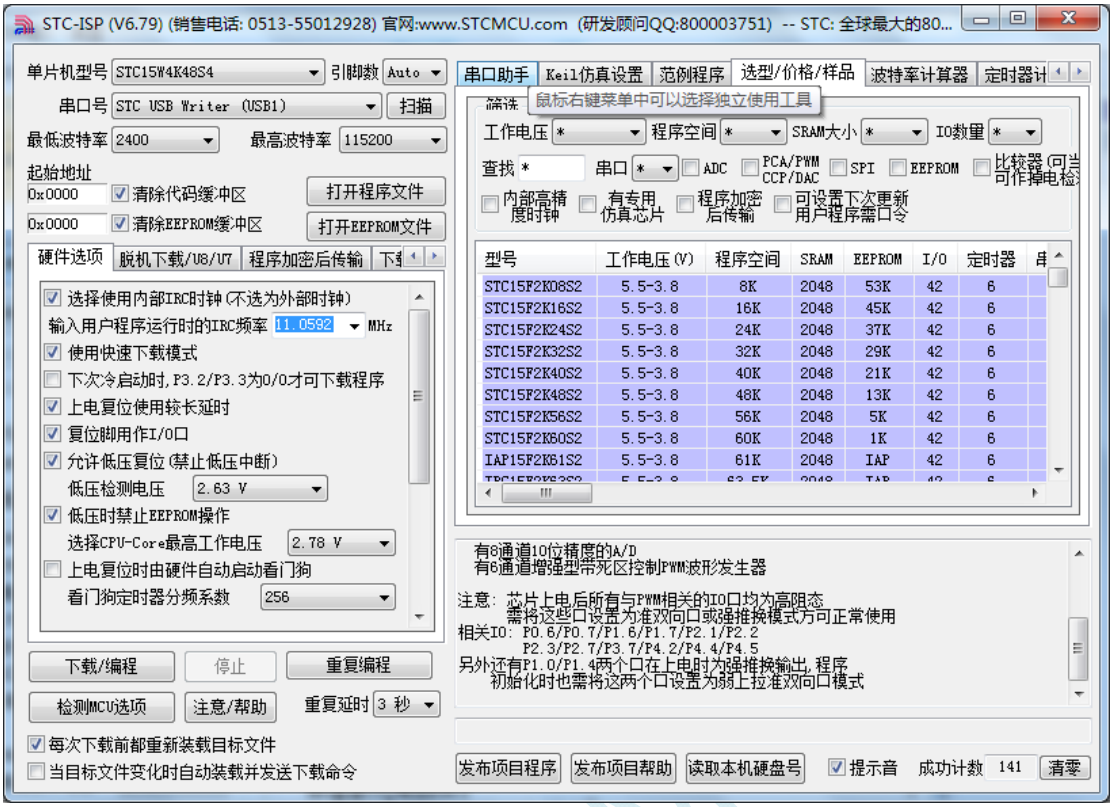

● Windows 8(32 bit)installation method

Open STC-ISP download software for V6.79 (or later)(Due to permission reasons, downloading software in Windows 8 will not copy the driver files to the relevant system directory, requiring the user to manually install.First, download "stc-isp-15xx-v6.79.zip" (or later) from STC official website. After downloading and decompressing it to the local disk, the STC-USB driver file will also be extracted to the current unzipped directory “STC-USB Driver”.(For example, if you unzip the downloaded compressed file "stc-isp-15xx-v6.79.zip" to "F:\", the STC-USB driver is in the "F:\STC-USB Driver" directory.))

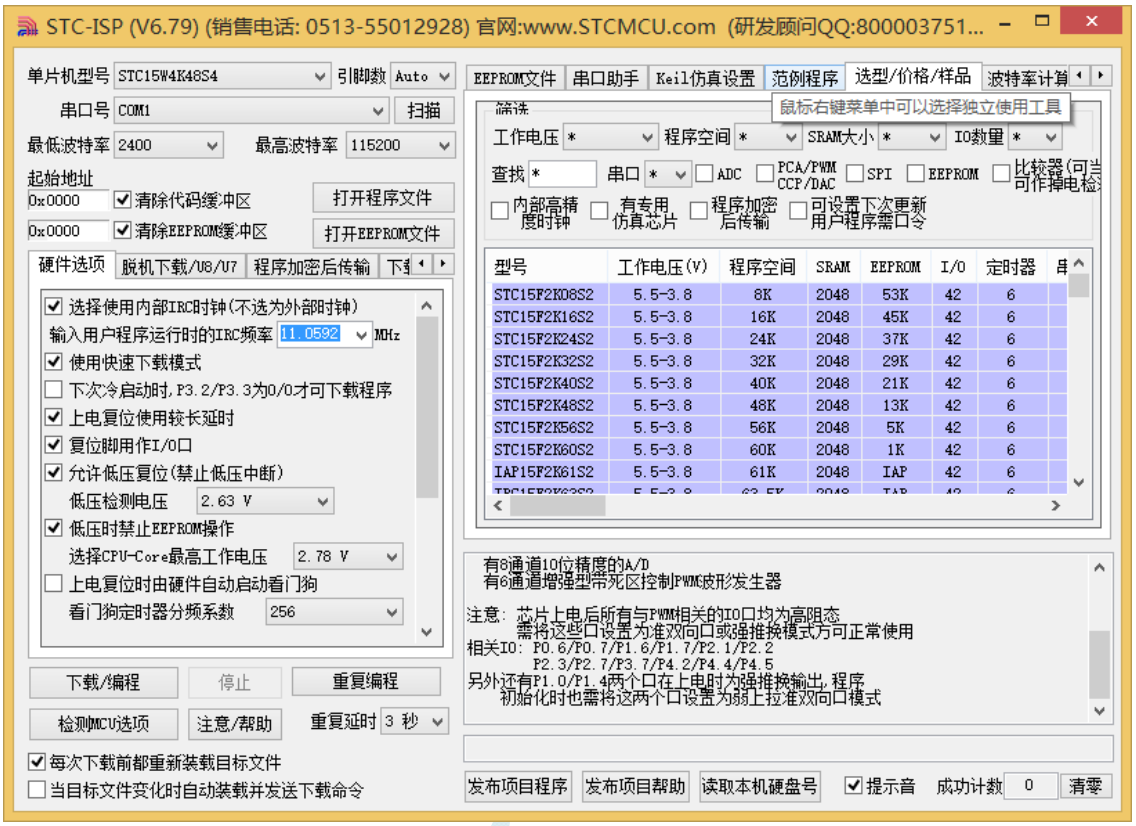

Insert the USB device and open the Device Manager. Locate the USB device with a yellow exclamation mark in the device list. From the right-click menu of the device, select Update Driver Software.

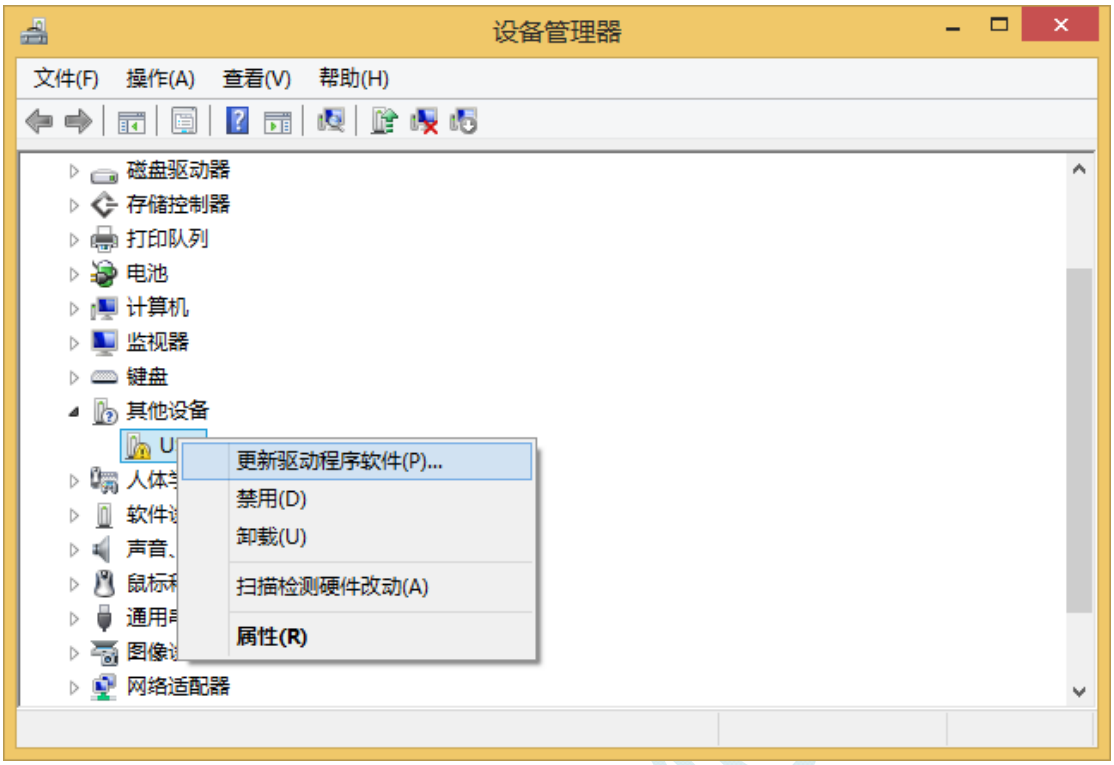

In the following dialog box, select "Browse my computer for driver software."

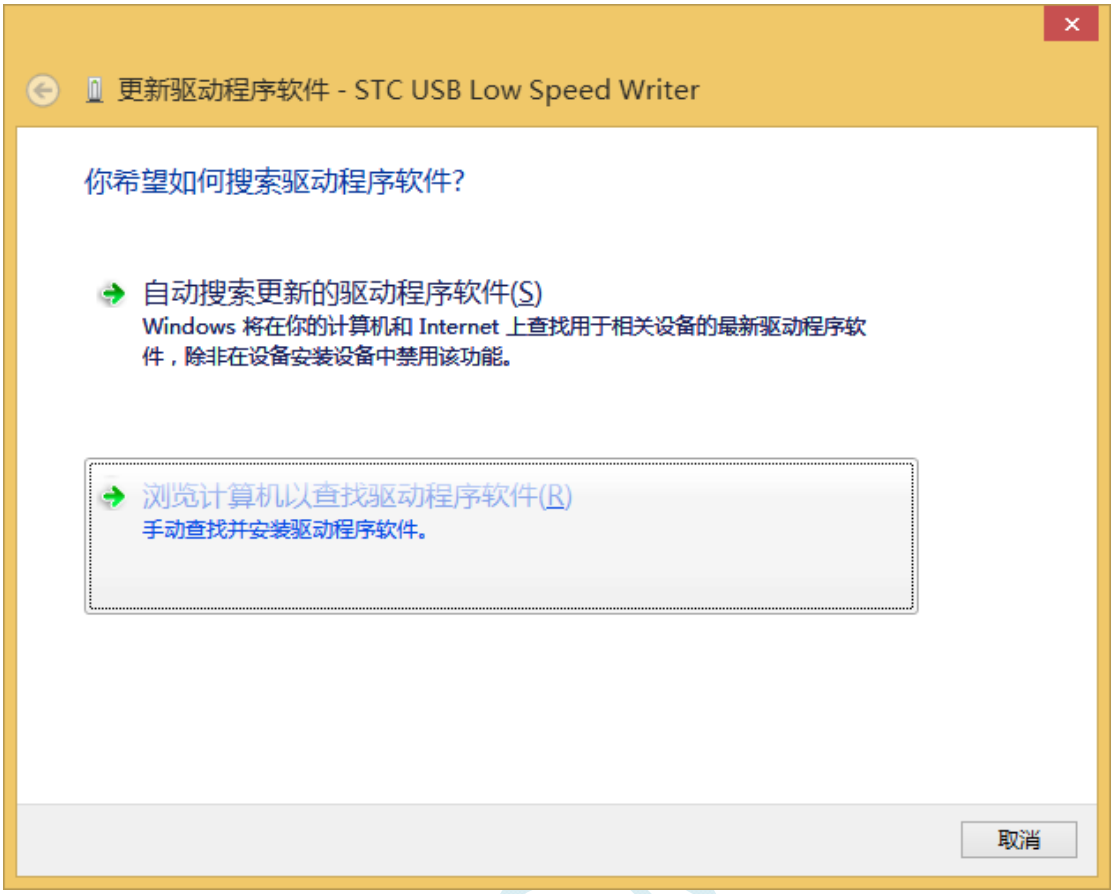

Click the "Browse" button in the dialog below to find the directory where the previous STC-USB driver was stored(For example, the previous example directory is "F:\STC-USB Driver". The user will locate the path to the actual decompressed directory.)

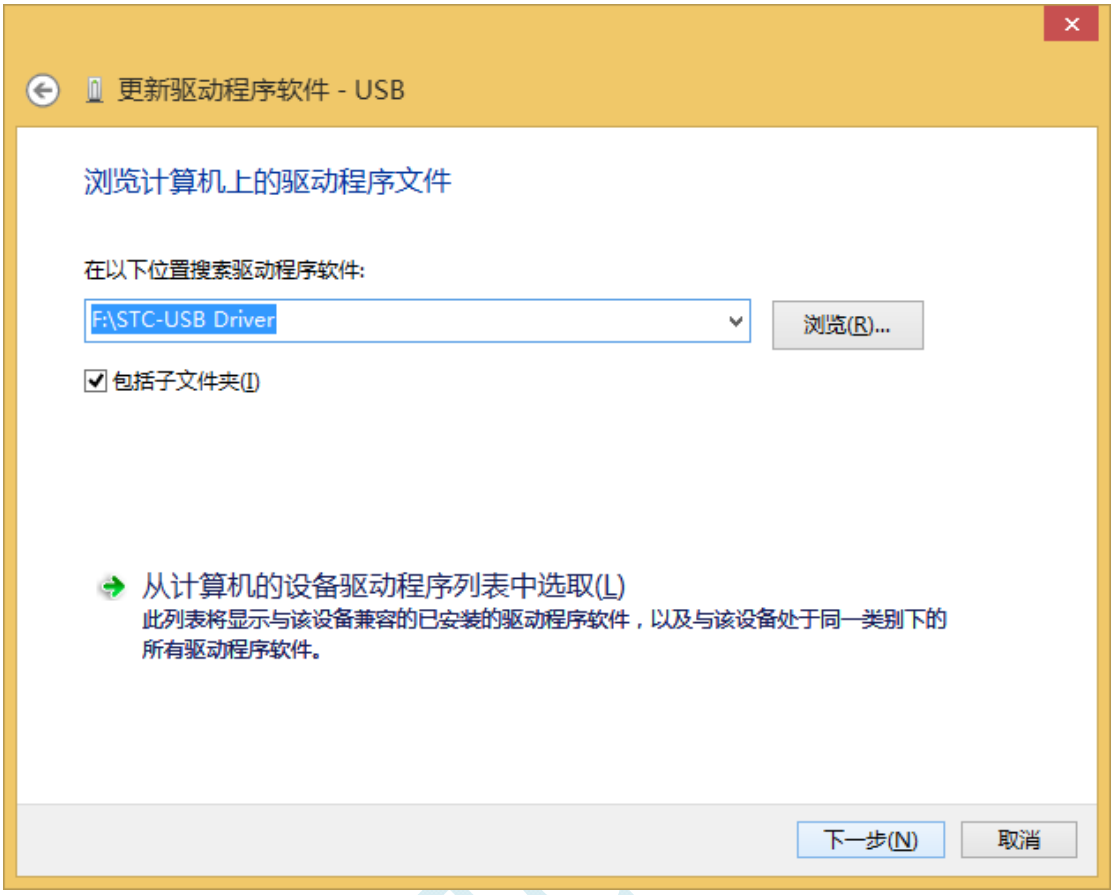

When the driver starts to install, the following dialog box will pop up and select "Always install this driver software".

STC MCU

Next, the system will automatically install the driver, as shown below

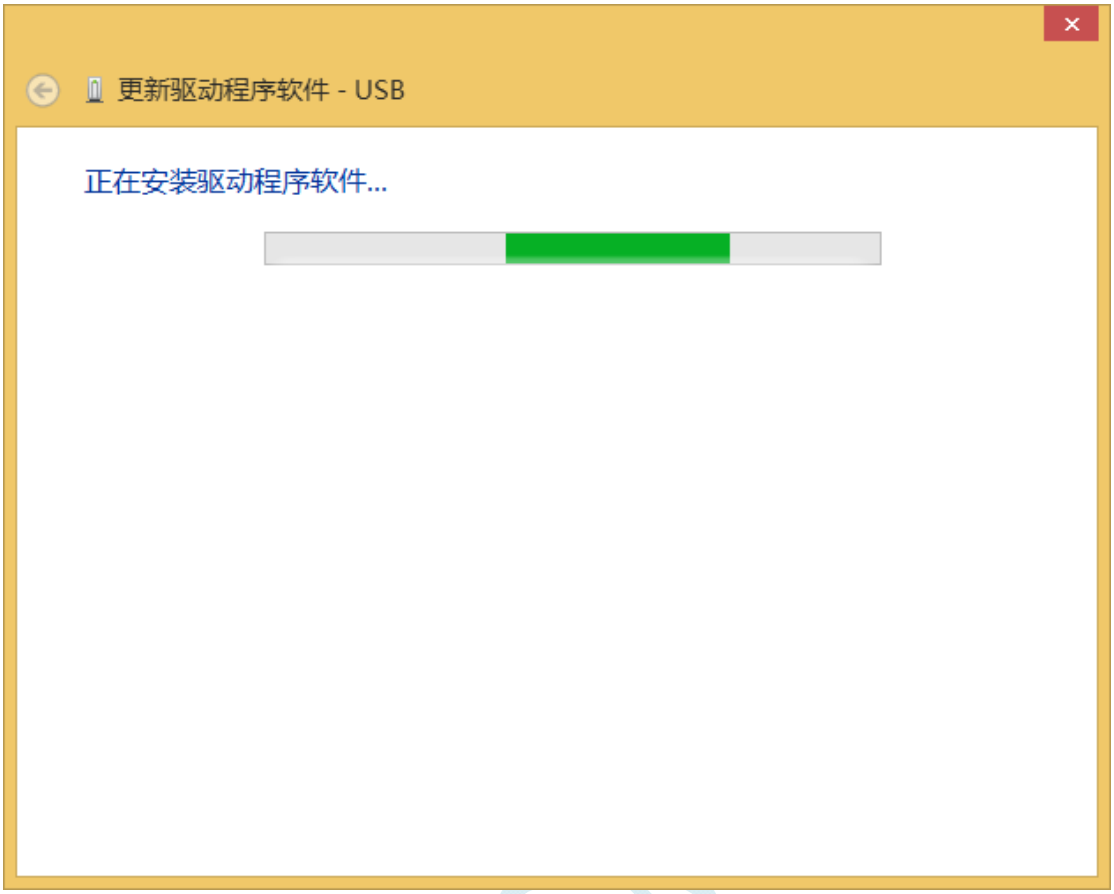

The following dialog box appears indicating that the driver installation is complete.

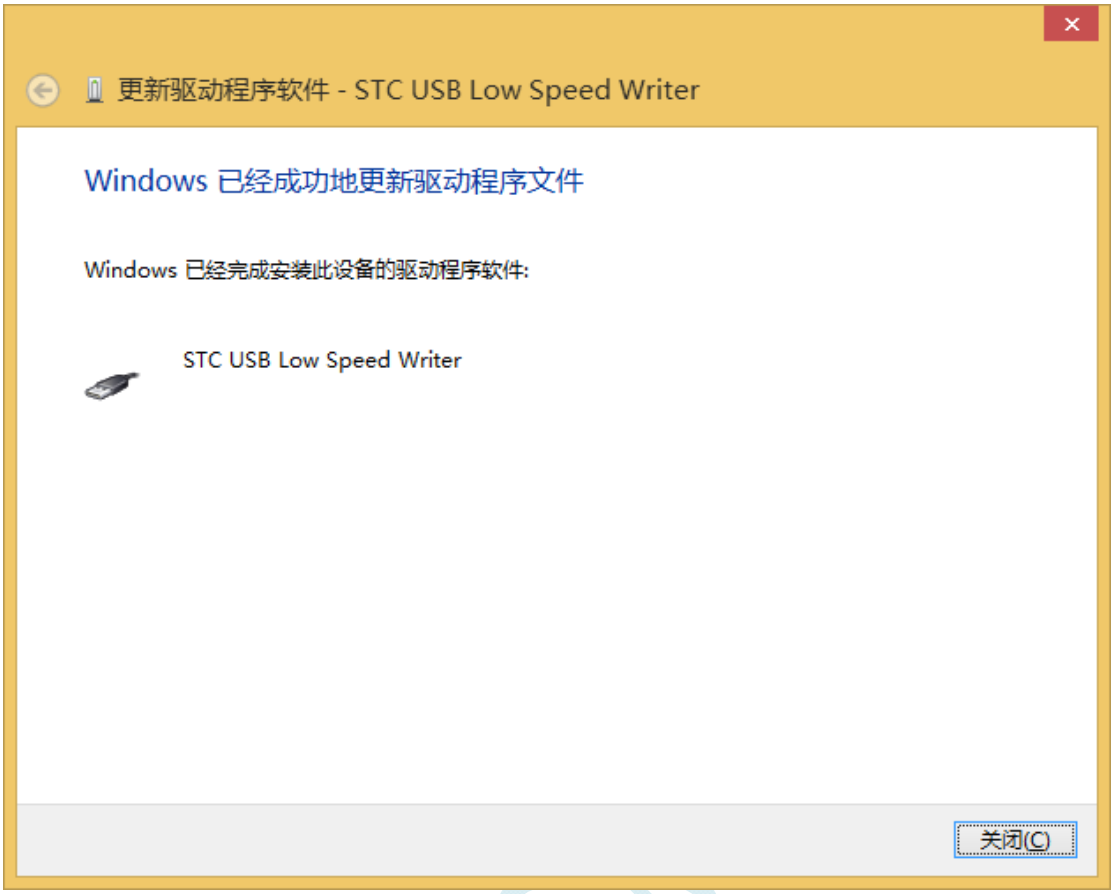

At this point in the device manager, the device with the yellow exclamation point before it will now display the device name "STC USB Low Speed Writer."

The serial port number list in the previously opened STC-ISP download software will automatically select the inserted USB device and display the device name as “STC USB Writer (USB1)”, as shown below:

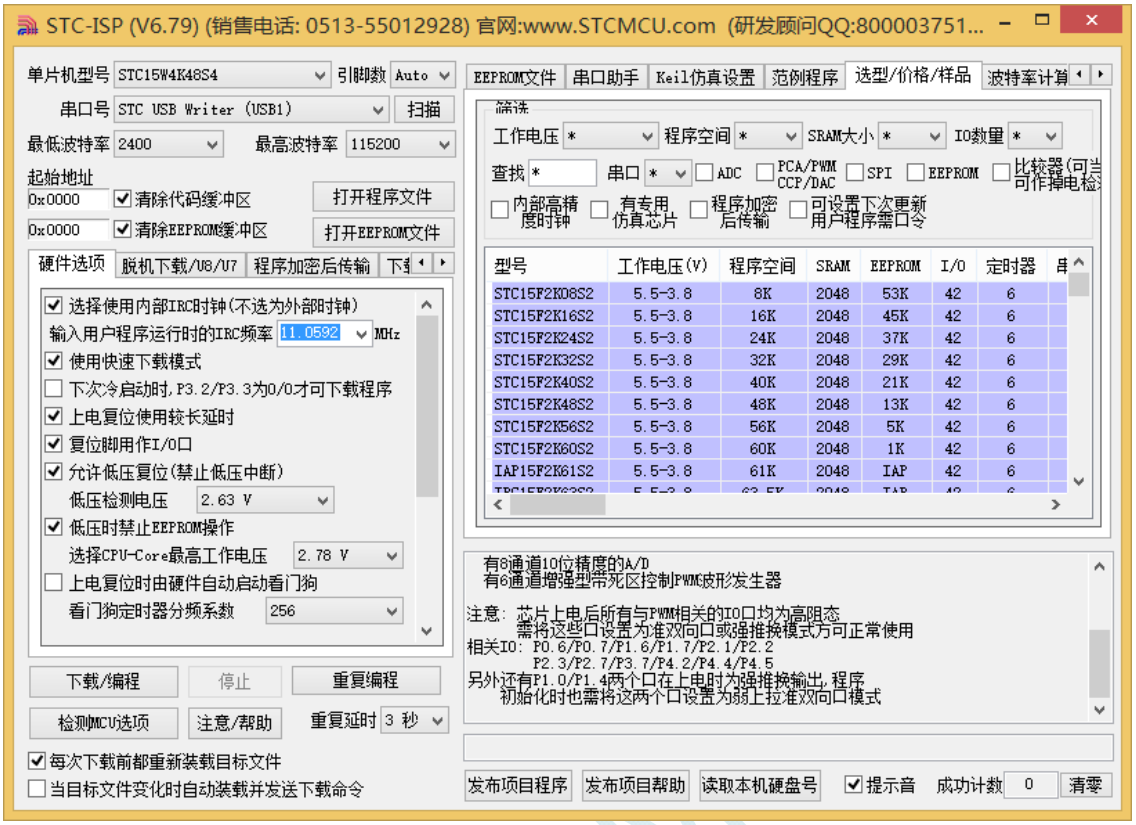

● Windows 8(64 bit)installation method

Because the Windows 8 64-bit operating system is in the default state, drivers that do not have digital signatures cannot be installed successfully. Therefore, before installing the STC-USB driver, you need to follow the steps below to temporarily skip the digital signature and install it successfully.

First move the mouse to the lower right corner of the screen and select the "Settings" button.

Then select "change computer settings" item in the setting interface.

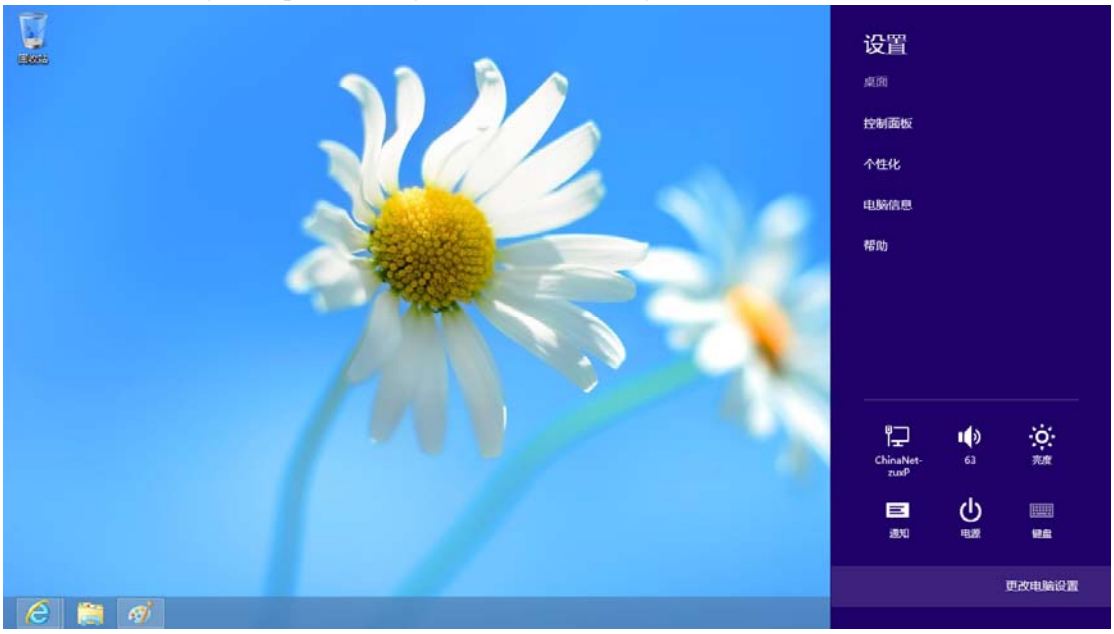

STC MCU

In the PC settings, select the "Start Now" button under the "Advanced startup" item in the "General" property page.

STC MCU

In the following interface, select the "Troubleshoot" item.

Then select "Advanced Options" in "Troubleshooting."

In the "Advanced Options" interface below, select "Startup Settings".

In the following "Startup Settings" interface, click the "Restart" button to restart the computer.

After the computer restarts, it will automatically enter the "Startup Settings" interface as shown in the figure below. Press the number key "7" or press the function key "F7" to select "Disable Driver Force Signature" to start.

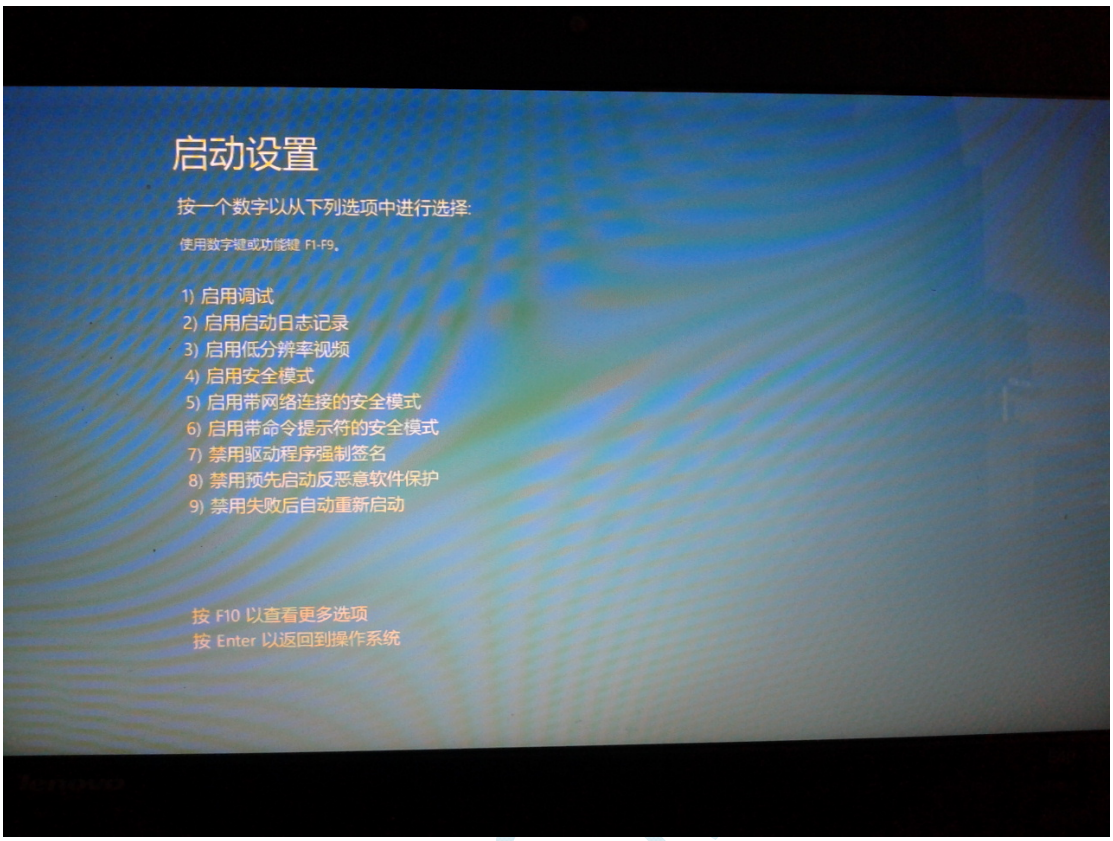

After booting to Windows 8, the installation of the driver can be completed according to the installation method of Windows 8 (32-bit).

Windows 8.1(64 bit)installation method

Windows 8.1 and Windows 8 have different methods for entering the advanced boot menu, and are specifically described here.

First move the mouse to the lower right corner of the screen and select the "Settings" button.

Then select "change computer settings" item in the setting interface.

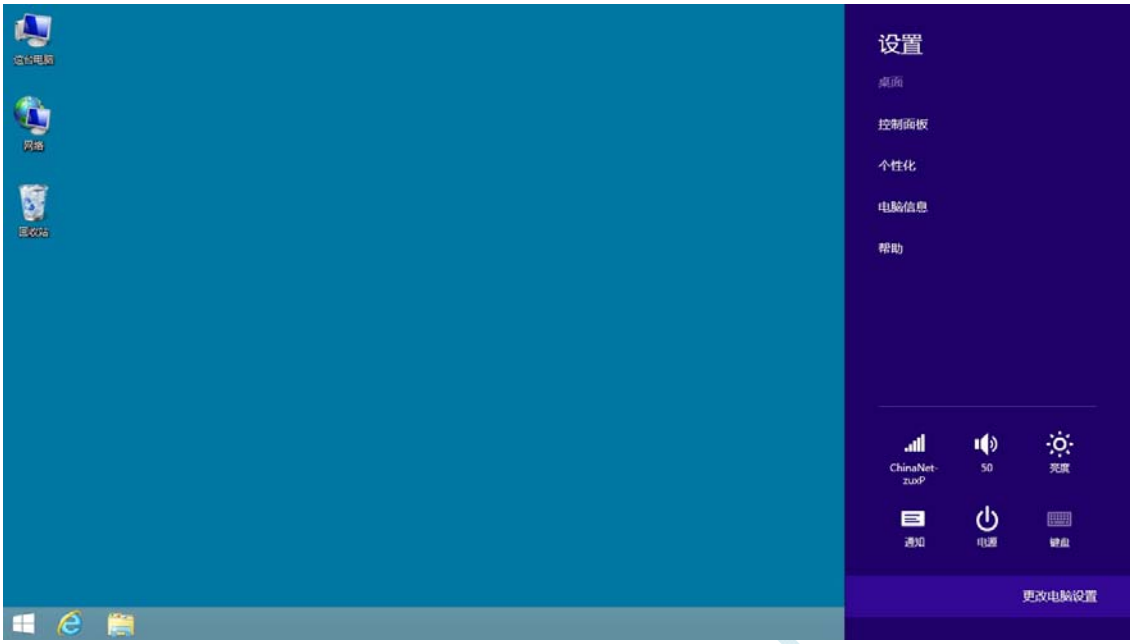

STC MCU

In the computer settings, select "Update and Restore" (this is different from Windows 8 and Windows 8 selects "General").

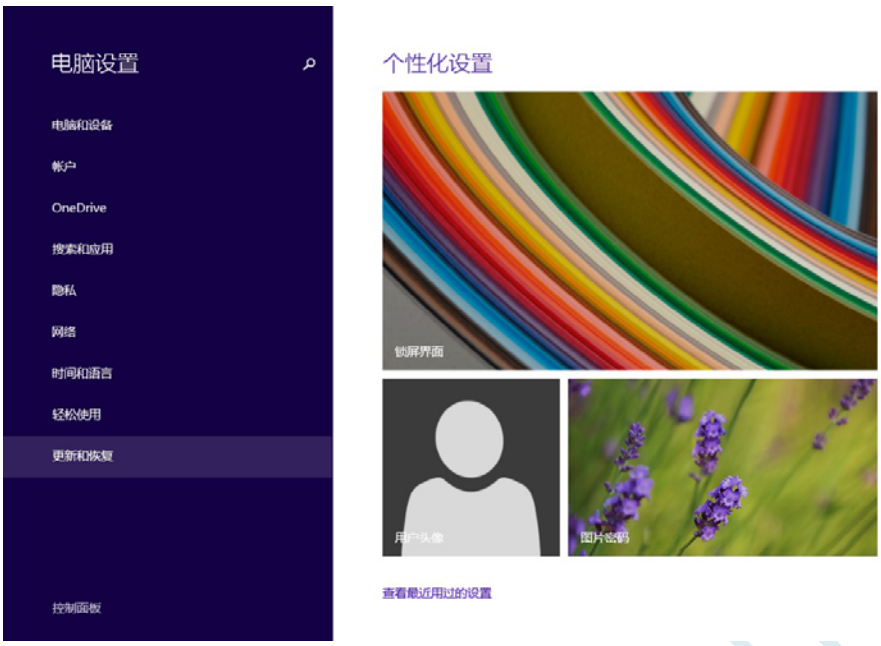

STC MCU

Select the "Restore" property page on the Update and Recovery page and click the "Start Now" button under the "Advanced startup" item.

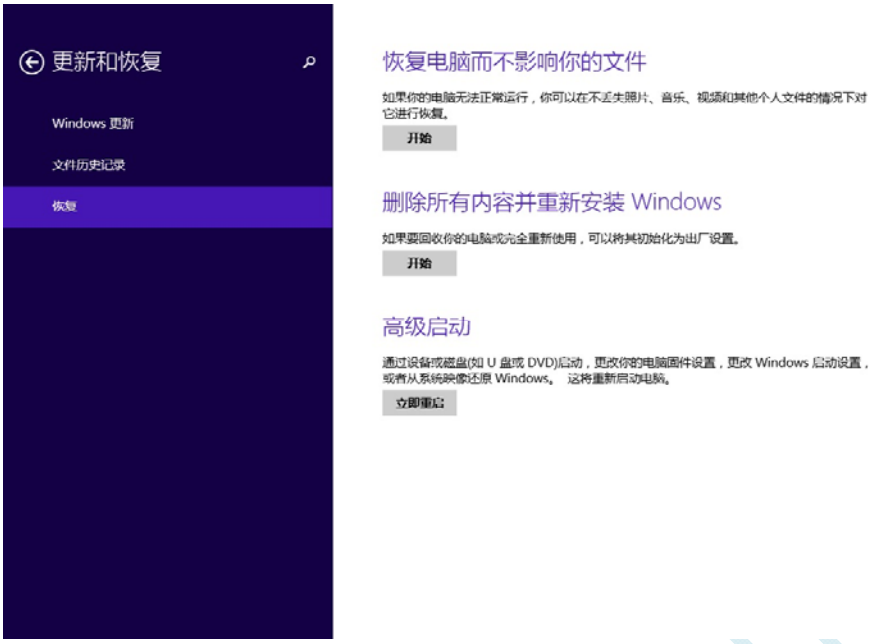

STC MCU

The following operations are the same as those of Window 8. In the following interface, select the "Troubleshoot" item.

Then select "Advanced Options" in "Troubleshooting."

In the "Advanced Options" interface below, select "Startup Settings".

In the following "Startup Settings" interface, click the "Restart" button to restart the computer.

After the computer restarts, it will automatically enter the "Startup Settings" interface as shown in the figure below. Press the number key "7" or press the function key "F7" to select "Disable Driver Force Signature" to start.

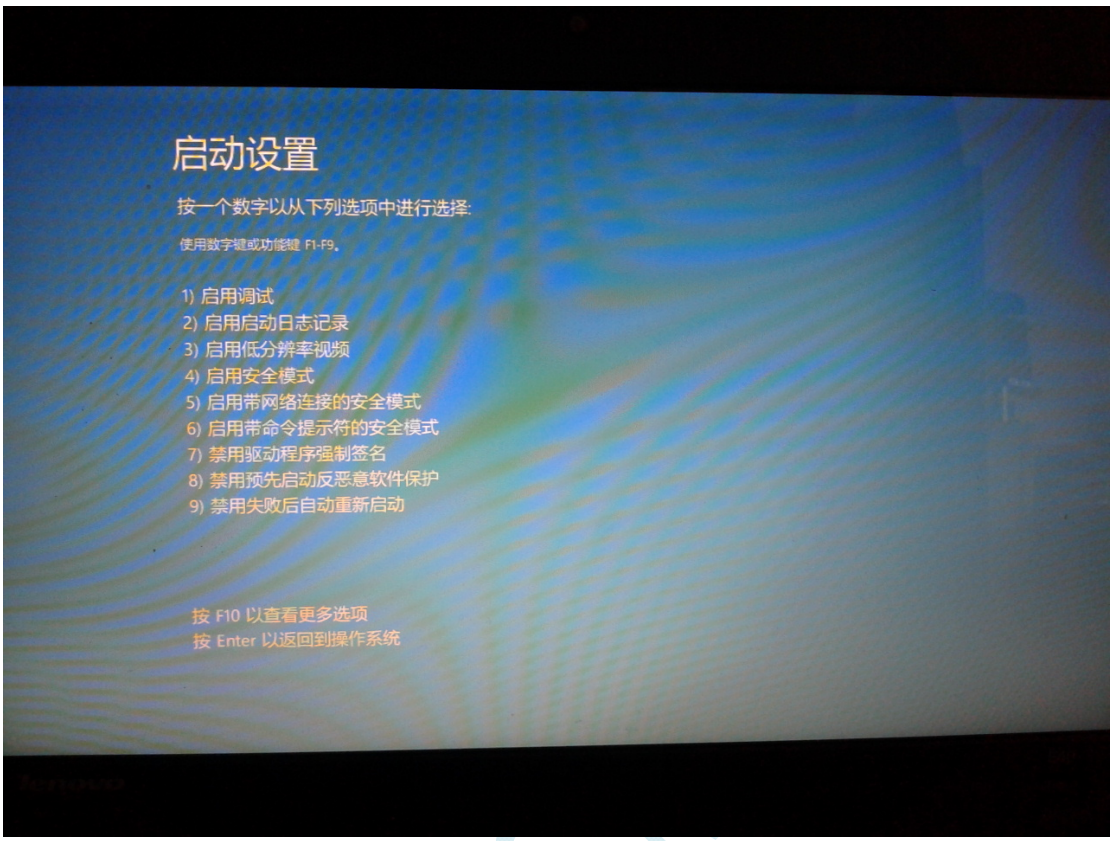

After booting to Windows 8, the installation of the driver can be completed according to the installation method of Windows 8 (32-bit).

Appendix D Electrical Character

Absolute maximum rated value

parameter	Minimum	Maximum	unit
Storage temperature	-55	+125	℃
working temperature	-40	+85	℃
working voltage	2.0	5.5	V
VDD voltage to earth	-0.3	+5.5	V
IO voltage to earth	-0.3	VDD+0.3	V

direct-current characteristic (VSS=0V，VDD=5.0V，Test temperature=25℃)(**STC8F2K series**)

Labeling	parameter	range				testing environment
		Minimum	Typical value	Maximum	unit	
I_{PD}	Power-down mode current (SCC = 1)	-	0.08	-	uA	5.0V
	Power-down mode current (SCC = 0)	-	1.5	-	uA	5.0V
I_{WKT}	Power-down wake-up timer	-	5	-	uA	5.0V
I_{LVD}	Low voltage detection module	-	260	-	uA	5.0V
I_{IDL}	Idle mode current(6MHz)	-	1.3	-	mA	5.0V
	Idle mode current(11.0592MHz)		1.7		mA	5.0V
	Idle mode current(20MHz)		2.3		mA	5.0V
	Idle mode current(22.1184MHz)	-	2.5	-	mA	5.0V
	Idle mode current(24MHz)	-	2.6	-	mA	5.0V
	Idle mode current (internal 32KHz)	-	850	-	uA	5.0V
I_{NOR}	Normal mode current(6MHz)	-	2.7	-	mA	5.0V
	Normal mode current(11.0592MHz)	-	3.8	-	mA	5.0V
	Normal mode current(20MHz)	-	5.9	-	mA	5.0V
	Normal mode current(22.1184MHz)	-	6.3	-	mA	5.0V
	Normal mode current(24MHz)	-	6.5	-	mA	5.0V
	Normal mode current (internal 32KHz)	-	950	-	uA	5.0V
I_{CC}	Normal operating mode current	-	4	20	mA	5.0V
V_{IL1}	Input low level	-	-	1.4	V	5.0V (Open Schmidt trigger)
		-	-	1.5	V	5.0V

						(Turn off Schmidt trigger)
V_{IH1}	Input high level(ordinary I/O)	1.7	-	-	V	5.0V (Open Schmidt trigger)
		1.6	-	-	V	5.0V (Turn off Schmidt trigger)
V_{IH2}	Input high level(Reset foot)	1.6	-	1.7	V	5.0V
I_{OL1}	Output low sink current	-	20	-	mA	5.0V，Port voltage 0.45V
I_{OH1}	Output high level current (Bidirectional mode)	200	270	-	uA	5.0V
I_{OH2}	Output high level current (Push-pull mode)	-	20	-	mA	5.0V，Port voltage 2.4V
I_{IL}	Logic 0 input current	-	-	50	uA	5.0V，Port voltage 0V
I_{TL}	Transfer current from logic 1 to 0	100	270	600	uA	5.0V，Port voltage 2.0V
R_{PU}	IO pull-up resistor	4.1	4.2	4.4	KΩ	5.0V
R_{PU}	IO pull-up resistor	5.8	5.9	6.0	KΩ	3.3V

direct-current characteristic(VSS=0V，VDD=5.0V，Test temperature=25℃)(**STC8A8K series**)

Labeling	parameter	range				testing environment
		Minimum	Typical value	Maximum	unit	
I_{PD}	Power-down mode current (SCC = 1)	-	0.08	-	uA	5.0V
	Power-down mode current (SCC = 0)	-	1.6	-	uA	5.0V
I_{WKT}	Power-down wake-up timer	-	5	-	uA	5.0V
I_{LVD}	Low voltage detection module	-	260	-	uA	5.0V
I_{IDL}	Idle mode current(6MHz)	-	1.5	-	mA	5.0V
	Idle mode current(11.0592MHz)		1.9		mA	5.0V
	Idle mode current(20MHz)		2.7		mA	5.0V
	Idle mode current(22.1184MHz)	-	3.0	-	mA	5.0V
	Idle mode current(24MHz)	-	3.2	-	mA	5.0V
	Idle mode current (internal 32KHz)	-	890	-	uA	5.0V
I_{NOR}	Normal mode current(6MHz)	-	3.0	-	mA	5.0V
	Normal mode current(11.0592MHz)	-	4.3	-	mA	5.0V
	Normal mode current(20MHz)	-	6.8	-	mA	5.0V
	Normal mode current(22.1184MHz)	-	7.4	-	mA	5.0V
	Normal mode current(24MHz)	-	7.8	-	mA	5.0V
	Normal mode current	-	950	-	uA	5.0V

	(internal 32KHz)					
I_{CC}	Normal operating mode current	-	4	20	mA	5.0V
V_{IL1}	Input low level	-	-	1.4	V	5.0V (Open Schmidt trigger)
		-	-	1.5	V	5.0V (Turn off Schmidt trigger)
V_{IH1}	Input high level(ordinary I/O)	2.2	-	-	V	5.0V (Open Schmidt trigger)
		1.6	-	-	V	5.0V (Turn off Schmidt trigger)
V_{IH2}	Input high level(Reset foot)	2.2	-	-	V	5.0V
I_{OL1}	Output low sink current	-	20	-	mA	5.0V，Port voltage 0.45V
I_{OH1}	Output high level current (Bidirectional mode)	200	270	-	uA	5.0V
I_{OH2}	Output high level current (Push-pull mode)	-	20	-	mA	5.0V，Port voltage 2.4V
I_{IL}	Logic 0 input current	-	-	50	uA	5.0V，Port voltage 0V
I_{TL}	Transfer current from logic 1 to 0	100	270	600	uA	5.0V，Port voltage 2.0V
R_{PU}	IO pull-up resistor	4.1	4.2	4.4	KΩ	5.0V
R_{PU}	IO pull-up resistor	5.8	5.9	6.0	KΩ	3.3V

Internal IRC temperature drift characteristics(reference temperature 25℃)

Temperature	Range
-40℃～85℃	−1.8%～+0.8%
-20℃～65℃	−1.0%～+0.5%

STCMCU

Appendix E Update Log

● 2018/3/20

1. Increase the sample program for reading important test parameters from ROM and RAM(8.3)
   a) Reading Bandgap voltage values from memory
   b) Read globally unique ID number from memory
   c) Read 32K Power-Down Wake-up Timer Frequency from Memory
   d) Reading IRC Parameters from Memory Manually Set Internal IRC Frequency

● 2018/3/13

1. Added pin diagram for STC8F1K08S2 model SOP16

● 2018/3/6

1. Increase the use of comparators for power-down detection example program(15.3.3)
2. Increase the use of comparators to detect operating voltage (battery voltage) example program(15.3.4)
3. Added example program for detecting operating voltage (battery voltage) using LVD (Low Voltage Detection) inside the chip(7.4.13)
4. Added STC8F1K08S2 feature descriptions and pinouts
5. Add STC8H1K08S2A10 features and pinouts

● 2018/1/30

1. Remove the use of "using,_at_" in the sample program
2. Explain the RSTV function of P2.0
3. Indicates the voltage value of the internal reference voltage
4. Adjust part of reference circuit diagram

● 2017/11/27

1. Increase the power-down wake-up IO port and increase the power-down wakeup sample program

● 2017/11/7

1. Corrects the clock output by the main clock divided by the system clock divided by CLKDIV(**The previous error description is that the main clock divided by the frequency output clock is the main clock before the CLKDIV frequency division**)
2. STC8 Series Comparator Interrupt Sets 4-Level Interrupt Priority(The previous version was incorrectly described)

3. Increase the interrupt system block diagram
4. Increase the ADC 16th channel test sample code for external battery voltage testing (Chapter 17.3.4)
5. Added sample code for reading important parameters inside STC8 series MCUs (Chapter 8.3)

● 2017/11/2

1. Added SOP16 pin diagram for STC8H1K08S2A10 series and STC8H1K08S2 series
2. Correct EEPROM programming and erase clocks
3. Important instructions for increasing the programming and erase latency settings of STC8F series and STC8A series EEPROMs

● 2017/10/31

1. Update chip package diagram
2. Update ADC Typical Application Circuit Diagram

● 2017/8/9

1. Corrected the number of IO ports of the STC8A4K64S2A12 series to 59
2. Update selection price list

● 2017/8/1

1. Update application considerations

● 2017/7/27

1. Update selection and Price list

● 2017/7/12

1. Adding an important note to the STC8F2K64S4 Series D chip
2. STC8F2K64S4 Series D Chip starts to send samples (optional package LQFP44N LQFP32U PDIP40)

● 2017/7/3

1. STC8F2K Series Add TSSOP20 and SOP16 Pins

● 2017/6/30

1. Increase the package size of QFN32, TSSOP20, SOP16
2. Important notes for updating the revision

STC MCU

● 2017/5/17

1. Add STC8F2K64S2 Series
2. Add STC8A4K64S2A12 Series
3. Add STC8F1K08S2A10 Series
4. Add STC8F1K08S2 Series

● 2017/5/12

1. Added description of auxiliary commands for I2C master mode(The auxiliary commands are valid only for the C version of the STC8F2K64S4 series and the E version of the STC8A8K64S4A12 series.)
2. Added reference circuit diagram for ISP download using U8W, U8-Mini, and PL2303
3. Added description of port internal pull-up resistor and Schmitt trigger control
4. Updated STC8 series microcontroller selection and reference price

● 2017/3/1

1. Add chapters for important instructions and chapters used by the emulator

● 2016/12/22

1. STC8F2K64S4 Series C Chips without PCA/CCP/PWM Capability 能
2. STC8A8K64S4A12 Series B version of the chip has the following points need attention

e) When the serial port 1 uses the mode 2 of the timer 1 as the baud rate generator, the SMOD (PCON.7) bit must be enabled.

f) All serial ports (including serial port 1, serial port 2, serial port 3, and serial port 4) must have two stop bits when receiving data; otherwise, data loss may occur.

g) When accessing the internal expansion XSFR, the EXTRAM (AUXR.1) bit needs to be set, otherwise the last 512 bytes of the internal XRAM are affected when the XSFR is written.

● 2016/11/22

1. Add sample programs
2. STC8F2K64S4 Series B version of the chip has the following points need attention

a) When the serial port 1 uses the mode 2 of the timer 1 as the baud rate generator, the SMOD (PCON.7) bit must be enabled.

b) All serial ports (including serial port 1, serial port 2, serial port 3, and serial port 4) must have two stop bits when receiving data; otherwise, data loss may occur.

c) When accessing the internal expansion XSFR, the EXTRAM (AUXR.1) bit needs to be set, otherwise it will affect the last 512 bytes of the internal XRAM when writing XSFR.

STCMCU

● 2016/9/13

1. Increase CAN bus function(Define CAN pins, CAN interrupt related SFRs)

CAN bus functional SFRs need to be defined after discussion

2. Add IP3 and IP3H to set the interrupt priority of serial port 3 and serial port 4
3. **The above two functions are in the planning stage. The current chip does not have this function**

● 2016/5/6

1. Add I2C Option to Selection Price List
2. The description of the port switching of the serial port 4 is wrong in the correction overview

● 2016/4/27

1. Modify some incorrect instruction execution time in the instruction list

● 2016/4/22

1. Modify the LQFP64S package diagram and pin arrangement of the STC8A8K64S4 series
2. Modify the package diagram and pin arrangement of the LQFP64S of STC8F8K64S4 series

● 2016/4/15

1. Modify the package diagram and pin arrangement of LQFP44 and LQFP48 of STC8A8K64S4 series
2. Modify the package drawing and pin arrangement of LQFP44 and LQFP48 of STC8F8K64S4 series
3. Modify the package diagram and pin arrangement of the STC8F2K64S4 series LQFP44

STCMCU