End-to-End Natural Language Generation Challenge

Ke Liang, Sanaz Mahmoodi Takaghaj, Sharad Maheshwari

Instructor: Prof. Rebecca Passonneau

CSE 597 - Natural Language Processing - Spring 2020

Outline

Introduction

Data Augmentation

Model Selection

Results and discussions

Conclusion and future work

Introduction

To generate a natural language utterance from a given meaning representation (MR) in the restaurant information domain

Attributes

MR

name[The Wrestlers],
priceRange[cheap],
customerRating[low]

→

NL Utterance

The wrestlers offers competitive prices, but isn't highly rated by customers

Personalized customer communications

Reporting on business data/data analysis

Analysis for business intelligence dashboards

https://medium.com/sciforce/a-comprehensive-guide-to-natural-language-generation-dd63a4b6e548

Results from the E2E NLG Challenge

System	BLEU	NIST	METEOR	ROUGE-L	CIDEr	norm. avg.
♡TGen	0.6593	8.6094	0.4483	0.6850	2.2338	0.5754
♡Slug	**0.6619**	**8.6130**	0.4454	0.6772	**2.2615**	0.5744
♡TNT1	0.6561	8.5105	**0.4517**	0.6839	2.2183	0.5729
♡NLE	0.6534	8.5300	0.4435	0.6829	2.1539	0.5696
♡TNT2	0.6502	8.5211	0.4396	**0.6853**	2.1670	0.5688
♡Harv	0.6496	8.5268	0.4386	**0.6872**	2.0850	0.5673
♡Zhang	0.6545	8.1840	0.4392	**0.7083**	2.1012	0.5661
♡Gong	0.6422	8.3453	0.4469	0.6645	**2.2721**	0.5631
♡TR1	0.6336	8.1848	0.4322	0.6828	2.1425	0.5563
◇Sheff1	0.6015	8.3075	0.4405	0.6778	2.1775	0.5537
♠DANGNT	0.5990	7.9277	0.4346	0.6634	2.0783	0.5395
♡Slug-alt *(late submission)*	0.6035	8.3954	0.4369	0.5991	2.1019	0.5378
◇ZHAW2	0.6004	8.1394	0.4388	0.6119	1.9188	0.5314
♠TUDA	0.5657	7.4544	**0.4529**	0.6614	1.8206	0.5215
◇ZHAW1	0.5864	8.0212	0.4322	0.5998	1.8173	0.5205
♡Adapt	0.5092	7.1954	0.4025	0.5872	1.5039	0.4738
♡Chen	0.5859	5.4383	0.3836	0.6714	1.5790	0.4685
♠FORGe3	0.4599	7.1092	0.3858	0.5611	1.5586	0.4547
♡Sheff2	0.5436	5.7462	0.3561	0.6152	1.4130	0.4462
♠TR2	0.4202	6.7686	0.3968	0.5481	1.4389	0.4372
♠FORGe1	0.4207	6.5139	0.3685	0.5437	1.3106	0.4231

Sequence-to-Sequence (seq2seq)

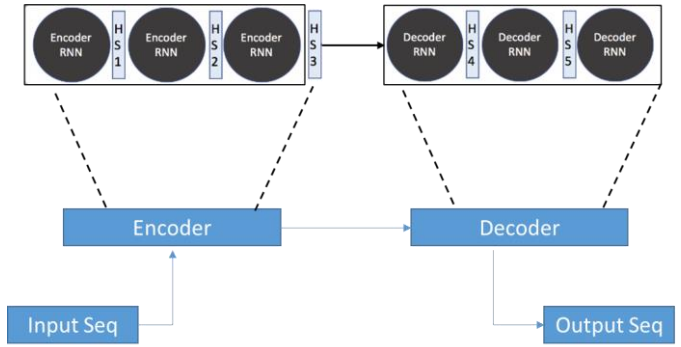

Template based

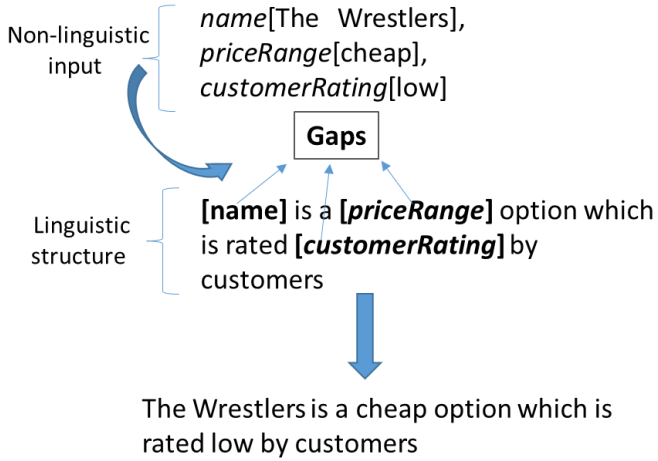

O. Dusek et al. Evaluating the state-of-the-art of End-to-End Natural Language Generation: The E2E NLG challenge, Comput. Speech Lang., 59 (2020) 123-156

Data Augmentation – Slot Permutation

Motivation - *Slot values and ordering can alter the skeleton of the utterance**

Original MR	name[Alimentum],food[Chinese], priceRange[cheap], area[riverside], familyFriendly[yes]
Permutation 1	priceRange[cheap],area[riverside], familyFriendly[yes],name[Alimentum], food[Chinese]
Permutation 2	priceRange[cheap],familyFriendly[yes], food[Chinese],name[Alimentum], area[riverside]
Permutation 3	area[riverside], food[Chinese], familyFriendly[yes],name[Alimentum], priceRange[cheap]
Permutation 4	food[Chinese], priceRange[cheap], familyFriendly[yes],area[riverside],name[Alimentum]
Permutation 5	familyFriendly[yes], area[riverside], priceRange[cheap], food[Chinese],name[Alimentum]

- Slot permutations can help make model more robust – diversifying the training data
- Can also hurt the performance as now slot-ordering of most of the training MR are unseen in the test-set

Nayak et al. To Plan or not to Plan? Discourse Planning in Slot-Value Informed Sequence to Sequence Models for Language Generation, 2017.

Data Augmentation – Sentence Logic

Motivation - *When generating real sentences, we often use certain words such as "yet", "however", "but" etc. to make the logic of the sentence clearer.*

Ref	Located near the Rainbow Vegetarian Café, it's inexpensive and family friendly, but the Chinese food at Strada has a low customer rating.
MR in Original dataset	name[Strada], food[Chinese], priceRange[less than £20], customerRating[low], familyFriendly[yes], near[Rainbow Vegetarian Café]
MR in the Augmented dataset	name[Strada], food[Chinese], priceRange[less than £20], customerRating[low], familyFriendly[yes], near[Rainbow Vegetarian Café], __contrast__[familyFriendly customerRating]

- Aimed to capture sentence meaning better
- Introduction of an MR that is not present in majority of the samples (only 1530 samples had such relationships)

Data Augmentation – De-Noise

Motivation – *Cleaner relationship between MR and reference utterance*

Ref	Close to Café Brazil, The Cambridge Blue pub serves delicious Tuscan Beef for the cheap price of £10.50. Delicious Pub food. .
MR in Original dataset	name[The Cambridge Blue], eatType[pub], food[English], priceRange[cheap], near[Café Brazil]
MR in the denoise dataset	name[The Cambridge Blue], eatType[pub], priceRange[cheap], near[Café Brazil]

- Certain slot value doesn't appear in the reference utterance - "noise"

Seq2seq Model

LATE 2016

GOOGLE TRANSLATE

PROS:

✓ **VERY CAPABLE**

CONS:

➢ **LONGER TRAINING TIME**

➢ **REQUIRES RE-RANKER**

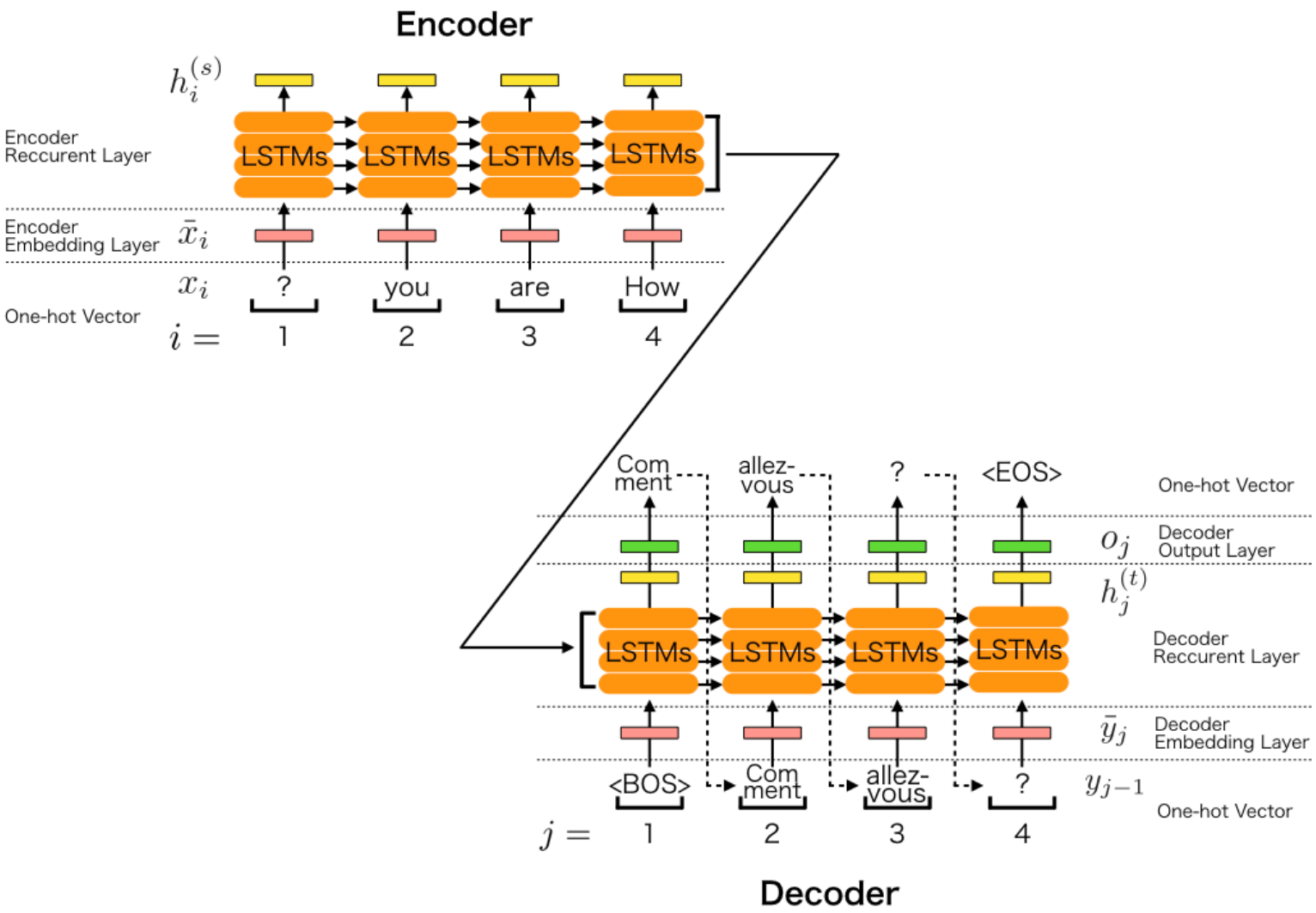

Transformer Model

ENCODER-DECODER

POSITIONAL ENCODING

MULTI-HEAD ATTENTION

PROS:

- ✓ **TENSOR2TENSOR MODEL**
- ✓ **MORE PARALLELIZABLE**
- ✓ **REQUIRE SIGNIFICANTLY LESS TIME TO TRAIN**

CONS:

- ➢ **LOTS OF PARAMETERS**
- ➢ **DIFFICULT TO DEBUG**

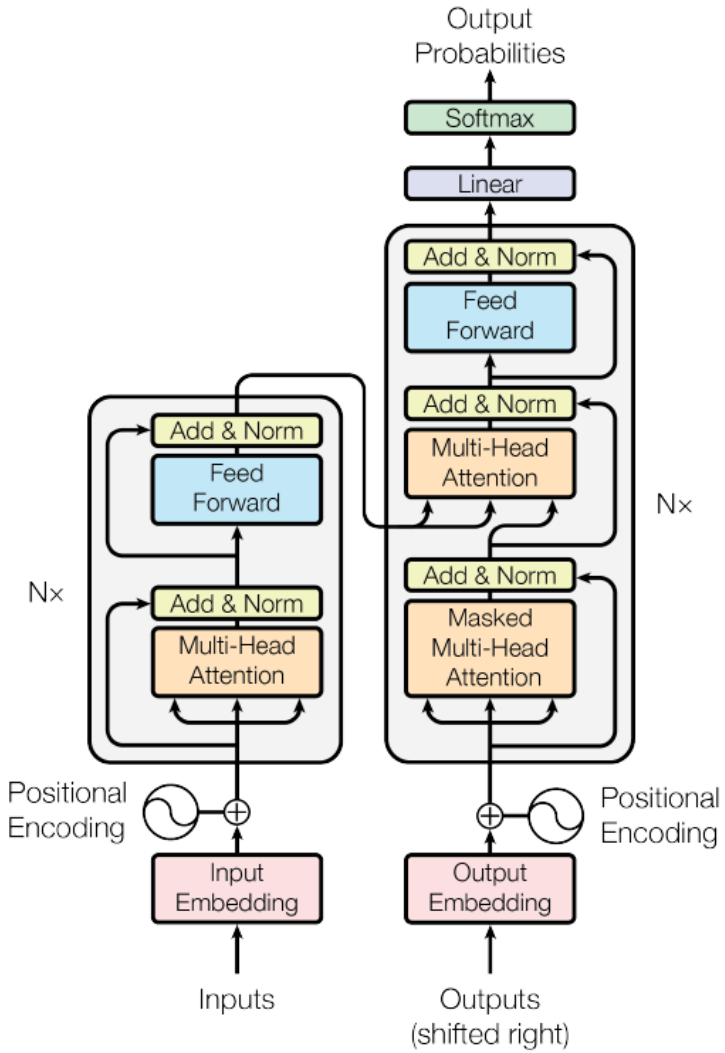

Evolved Transformer Model

- USE NEURAL ALGORITHM SEARCH TO FIND THE OPTIMAL MODEL WITHIN THE GIVEN SEARCH SPACE (NUMBER OF LAYERS, MAX NUMBER OF PARAMETERS)

CHALLENGE:

- FINDING THE RIGHT SEARCH SPACE

SOLUTION:

- FIND THE OPTIMAL ENCODER-DECODER CELL ARCHITECTURE AND STACK THEM

Evolved Transformer Stackable Cell Architecture

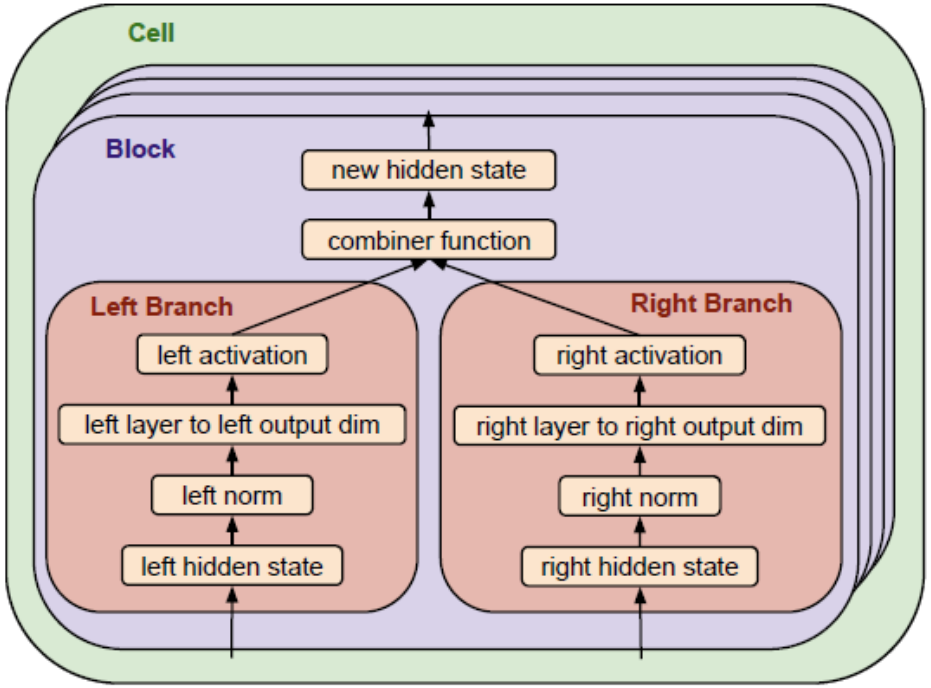

Encoder Block- Transformer and Evolved Transformer architecture cells

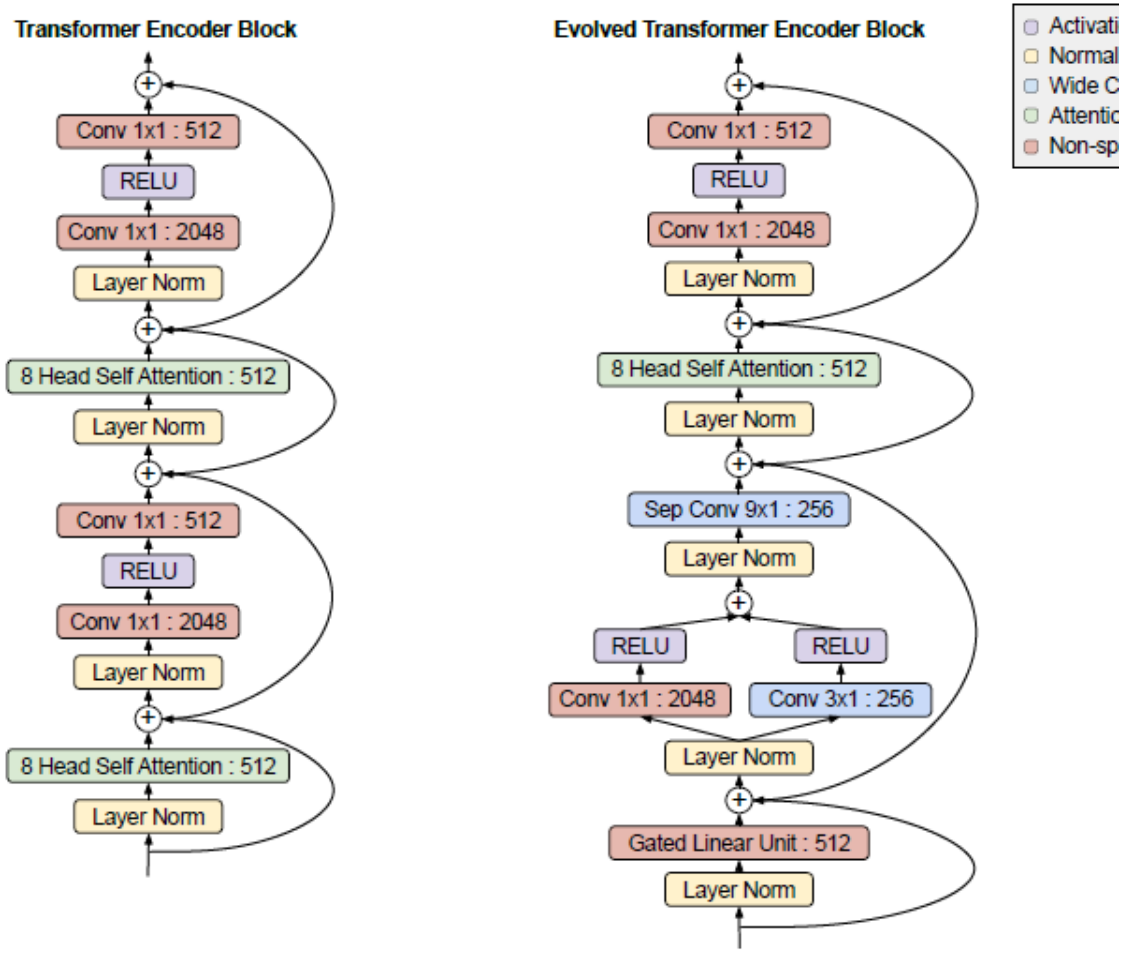

Decoder Block- Transformer and Evolved Transformer architecture cells

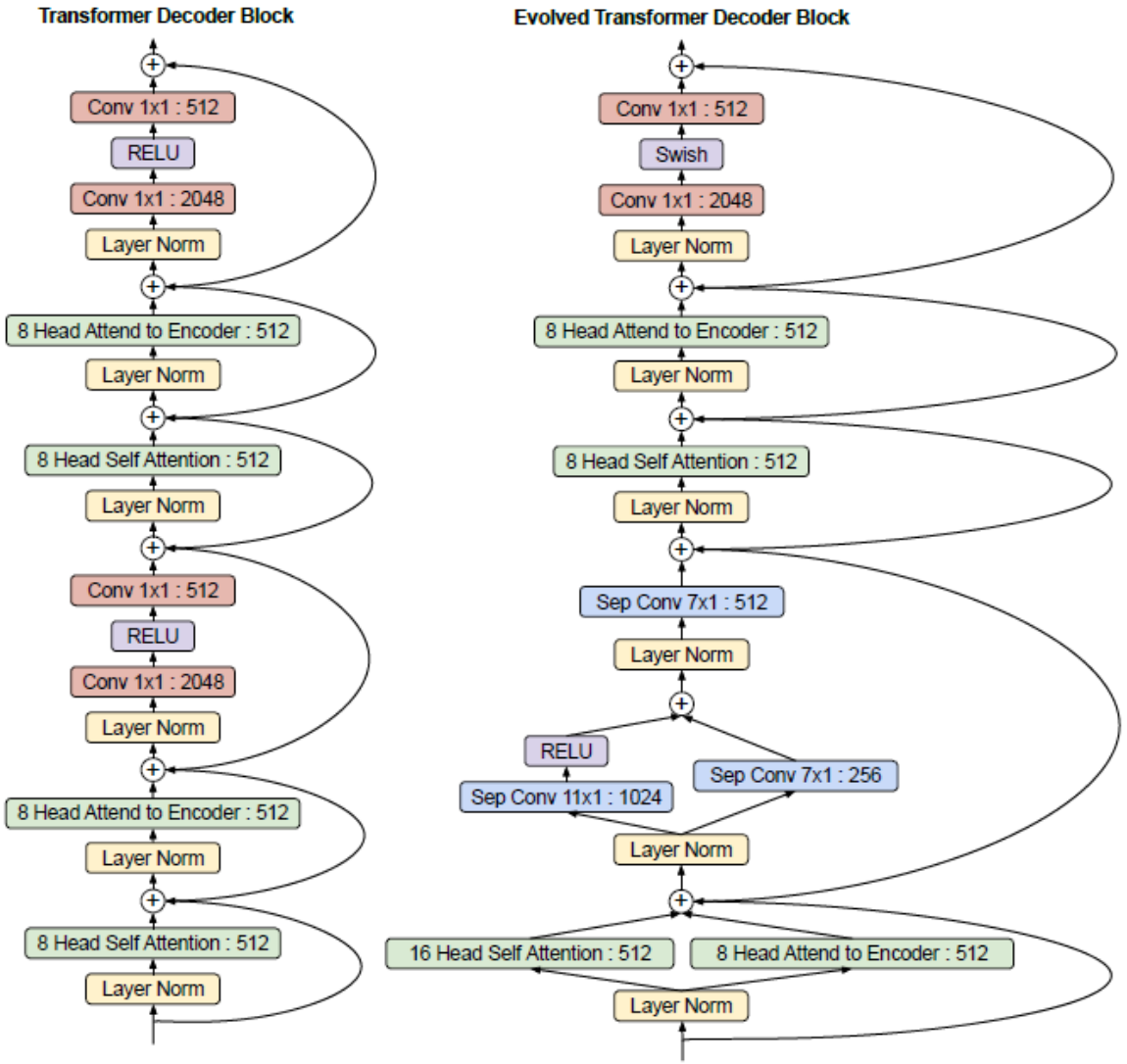

Results and Discussions

Tgen model with slot permutation ***ranks best at #10*** based on the method we introduced.

Tgen with other augmentation methods seems does have that good performance .

Transformer model without data augmentation ***ranks at #12***. While it has its own advantage, shown below.

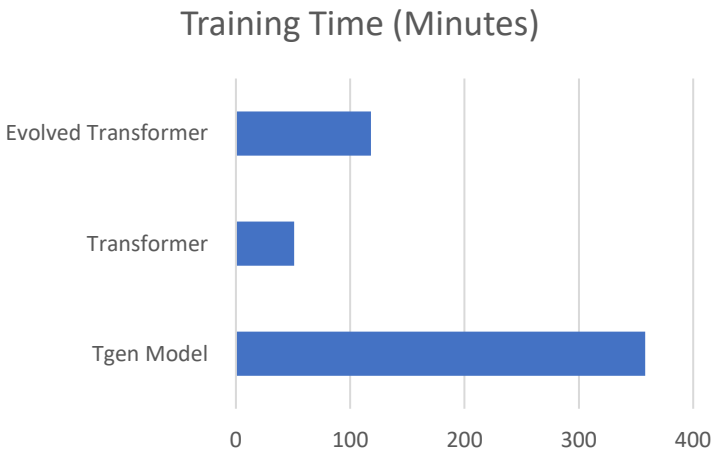

No loops for transformer

Notice the ***relationship*** for the word in all the sentence by ***attention mechanism***

Transformer model achieve real bidirectional embedding, while it is hard to debug.

Rank	System	BLEU	NIST	METEOR	ROUGE-L	CIDEr	Norm. Avg
1	TGEN baseline (Novikova et al., 2017b)	0.6593	8.6094	0.4483	0.685	2.2338	0.5754
2	SLUG (Juraska et al., 2018)	**0.6619**	**8.613**	0.4454	0.6772	2.2615	0.5744
3	TNT1 (Oraby et al., 2018)	0.6561	8.5105	0.4517	0.6839	2.2183	0.5729
4	NLE (Agarwal et al., 2018)	0.6534	8.5300	0.4435	0.6829	2.1539	0.5696
5	TNT2 (Tandon et al., 2018)	0.6502	8.5211	0.4396	0.6853	2.1670	0.5688
6	HARV (Gehrmann et al., 2018)	0.6496	8.5268	0.4386	0.6872	2.0850	0.5673
7	ZHANG (Zhang et al., 2018)	0.6545	8.1840	0.4392	**0.7083**	2.1012	0.5661
8	GONG (Gong, 2018)	0.6422	8.3453	0.4469	0.6645	2.2721	0.5631
9	TR1 (Schilder et al., 2018)	0.6336	8.1848	0.4322	0.6828	2.1425	0.5563
10	**TGEN + Slot Permutation**	0.6248	8.4773	0.4400	0.6473	2.1477	0.5549
11	SHEFF1 (Chen et al., 2018)	0.6015	8.3075	0.4405	0.6778	2.1775	0.5537
12	**Transformer**	0.5975	7.6537	0.4408	0.6794	2.1996	0.5406
13	DANGNT (Nguyen and Tran, 2018)	0.5990	7.9277	0.4346	0.6634	2.0783	0.5395
14	SLUG-ALT (late, Juraska et al., 2018)	0.6035	8.3954	0.4369	0.5991	2.1019	0.5378
15	**Evolved Transformer**	0.5861	7.585	0.4361	0.6781	2.1906	0.5356
16	ZHAW2 (Deriu and Cieliebak, 2018)	0.6004	8.1394	0.4388	0.6119	1.9188	0.5314
17	**TGEN + Sentence Logic**	0.5723	7.7345	0.4218	0.6532	2.0772	0.5257
18	TUDA (Puzikov and Gurevych, 2018)	0.5657	7.4544	**0.4529**	0.6614	1.8206	0.5215
19	ZHAW1 (Deriu and Cieliebak, 2018)	0.5864	8.0212	0.4322	0.5998	1.8173	0.5205
20	**TGEN + De-noise**	0.5438	7.1104	0.4231	0.6302	**2.4687**	0.5110
21	ADAPT (Elder et al., 2018)	0.5092	7.1954	0.4025	0.5872	1.5039	0.4738
22	**Transformer + Sentence Logic**	0.4797	6.5482	0.4044	0.6068	1.9789	0.4687
23	CHEN (Chen, 2018)	0.5859	5.4383	0.3836	0.6714	1.5790	0.4685
24	FORGE3 (Mille and Dasiopoulou, 2018)	0.4599	7.1092	0.3858	0.5611	1.5586	0.4547
25	SHEFF2 (Chen et al., 2018)	0.5436	5.7462	0.3561	0.6152	1.4130	0.4462
26	TR2 (Schilder et al., 2018)	0.4202	6.7686	0.3968	0.5481	1.4389	0.4372
27	FORGE1 (Mille and Dasiopoulou, 2018)	0.4207	6.5139	0.3685	0.5437	1.3106	0.4231

Table 6 Performance comparison of different models in this work with other E2E NLG participants

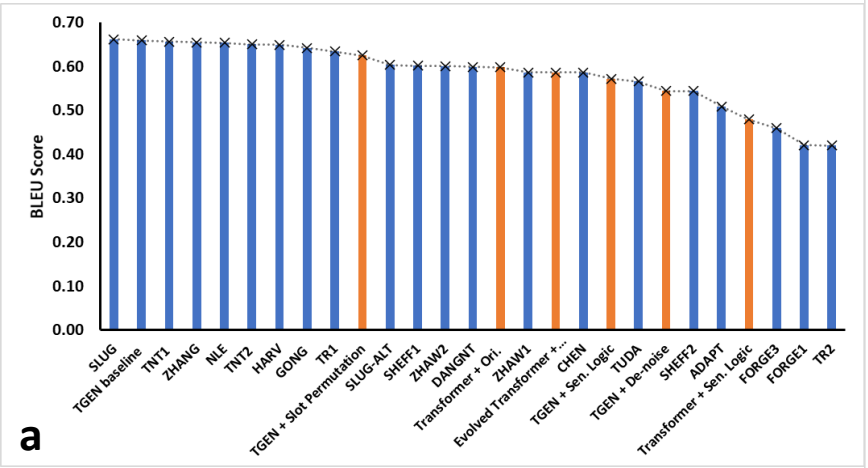

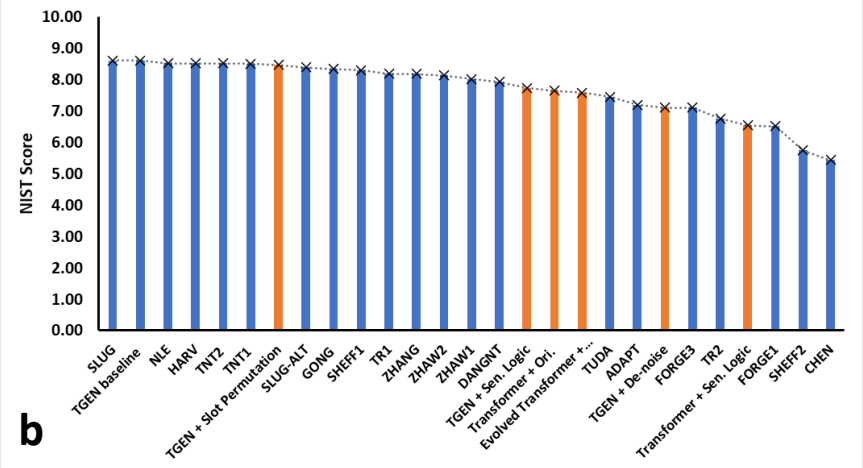

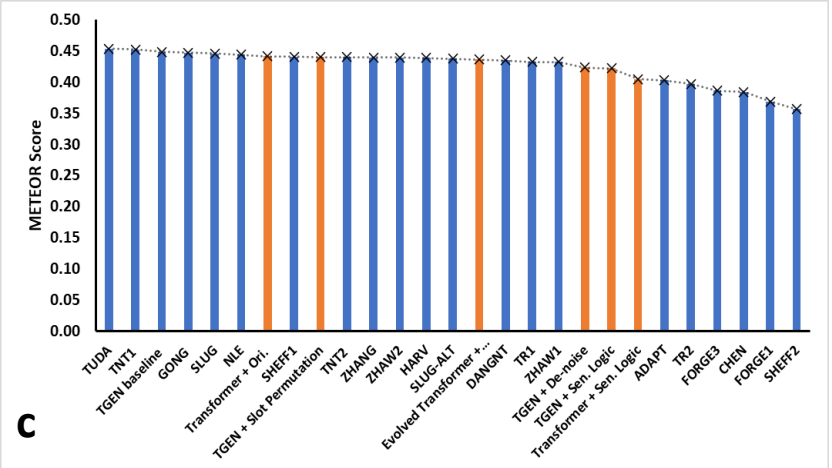

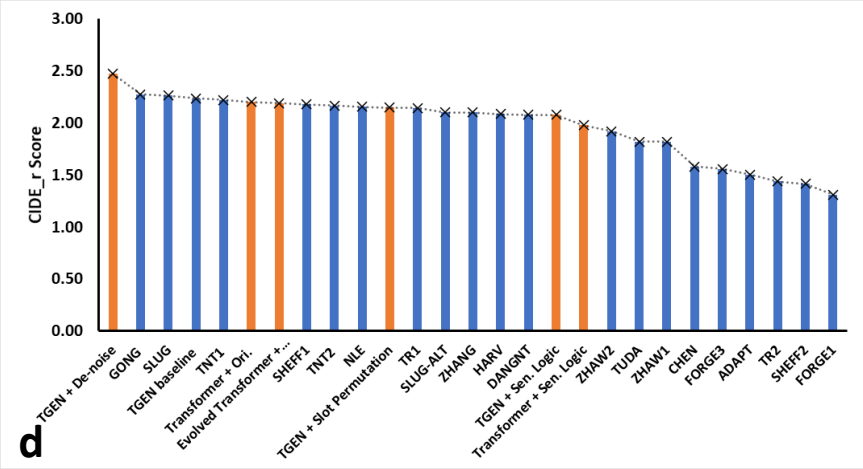

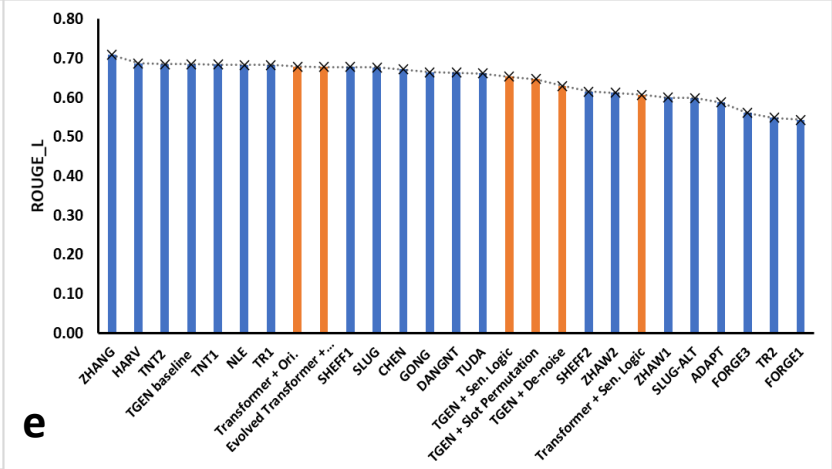

Tgen + Slot permutation **ranks #10 and #7** based on the BLEU and NIST scores respectively.

Tgen + De-noise system ***outperforms*** all other models based ***on the CIDEr metric***. -----*correlates well with human description*

The Transformer model ranks #7 based on the METEOR metrics, while not that good on Bleu metric. ------ *Robustness need to be improved*

Tgen + Sentence Logic system doesn't do well based on these metrics

System	BLEU	NIST	METEOR	ROUGE-L	CIDEr
TGEN baseline (Novikova et al., 2017b)	0.6593	8.6094	0.4483	0.685	2.2338
TGEN + Slot Permutation	0.6248	8.4773	0.4400	0.6473	2.1477
Transformer	0.5975	7.6537	0.4408	0.6794	2.1996
Evolved Transformer	0.5861	7.585	0.4361	0.6781	2.1906
TGEN + Sentence Logic	0.5723	7.7345	0.4218	0.6532	2.0772
TGEN + De-noise	0.5438	7.1104	0.4231	0.6302	**2.4687**
Transformer + Sentence Logic	0.4797	6.5482	0.4044	0.6068	1.9789

Conclusion

- data augmentation
  - Slot Permutation → overall performance (#10)
  - Sentence Logic → Not that good
  - De-Noise → Outcome others on the metric of CIDer
- changing model architecture
  - Tensor2Tensor Models : Transformer → overall performance (#12) with much shorter training time
  - Evolved Transformer Model
- One combination implementation:Tensor2Tensor Models : Transformer + Sentence Logic

Future work

1 Using Transformer-XL: Faster, process bigger sentences and longer-term dependencies

2 Due to the time limitation, we didn't finish all the combination between the data augmentation and T2T model

3 Due to the time limitation, we didn't finish all the combination between the data augmentation and T2T model, which can be also finished in the future

"You can't always get what you want,
but if you try sometimes you just
might find you get what you need"

- Philosopher Jagger

Thank you!