BEV-VAWA-Lite

A Lightweight BEV-Native Vision-Action / World-Action Framework
for Indoor PointGoal Navigation

面向室内 PointGoal 导航的轻量级 BEV-原生视觉-动作 / 世界-动作框架

Complete Technical Report　完整技术报告

Research Log —BEV-VAWA-Lite Project
`bev-vawa-lite` repository

April 2026

Abstract

EN. We propose a **BEV-native dual-system architecture** for depth-only PointGoal navigation in which two cooperating policy heads operate on a *single shared geometric bird's-eye-view (BEV) state*: a **Vision-Action (VA) head** provides fast reflexive waypoint selection from $K{=}5$ anchor candidates (~ 0.3 ms latency), and a **World-Action (WA) head** provides slow deliberative evaluation via an $H{=}3$-step latent rollout with per-step supervision on collision risk, goal progress, ensemble-variance uncertainty, and pathfinder-computed reachability ($\sim$3 ms latency). An **analytic fusion rule** $Q_k = \alpha\, s_k + \beta\, p_k - \gamma\, \sigma(r_k) - \delta\, u_k - \eta\, \sigma(d_k)$ combines the two systems without end-to-end learning, keeping the full model at **1.12 M parameters** and ~ 210 **Hz inference** on a consumer laptop. Closed-loop evaluation on the procedural PIB-Nav MuJoCo benchmark (4 seeds, 100 episodes each) reaches 0.49 ± 0.05 SR, *statistically indistinguishable* from an A*+Safety oracle (0.50), with a **paired cross-seed** $\Delta\mathrm{SR} = +0.093 \pm 0.013$ attributable to the slow WA-Safety pathway (the σ of the paired delta is $4\times$ smaller than single-seed noise). A four-intervention study on the 3D-scanned Gibson distribution validates the architecture's **scope**: imitation-only dual systems cannot bridge geometric covariance shift without closed-loop correction (DAGger) or reinforcement learning —a design boundary rather than a failure mode.

中文摘要。本文提出一个用于纯深度 PointGoal 导航的 **BEV-**原生双系统架构：两个策略头在共享几何鸟瞰图（**BEV**）状态上协同工作——视觉**-**动作（**VA**）头从 $K{=}5$ 扇形锚点候选中做快速反射式路点选择（$\sim$0.3 ms），世界**-**动作（**WA**）头通过 $H{=}3$ 步隐空间推演做慢速审慎式评估，输出每步的碰撞风险、目标进度、集成方差式不确定性以及基于 pathfinder 的可达性（$\sim$3 ms）；二者通过解析融合规则 $Q_k = \alpha\, s_k + \beta\, p_k - \gamma\, \sigma(r_k) - \delta\, u_k - \eta\, \sigma(d_k)$ 组合，全程不依赖端到端学习，整个模型参数量为 **1.12 M**、推理速度约 **210 Hz**（消费级笔记本）。在 PIB-Nav（MuJoCo 程序化基准）上闭环评测（4 种子 × 100 episode）达到 0.49 ± 0.05 SR，与 A*+Safety 的理想规划上限 0.50 在统计上不可区分；其中来自慢速 WA-Safety 通路的 配对跨种子 $\Delta\mathrm{SR} = +0.093 \pm 0.013$（配对差的标准差比单种子噪声小 $4\times$）。在 3D 扫描的 Gibson 分布上，四项干预实验量化了架构的适用边界：纯模仿式双系统无法仅靠参数调优或单轮闭环回填跨越几何协方差偏移，这是一项设计边界声明而非失败论断。

1　1. Introduction　引言

Embodied PointGoal navigation [1] is the task of moving a robot from a start pose to a metric goal position using on-board sensing. Recent systems scale to billions of parameters and multi-GPU training [9, 10, 3], targeting maximum generality across modalities and environments. This report takes the opposite stance: for the *static, depth-only, indoor* slice of the problem, a deliberately lightweight architecture trained on a single consumer laptop is sufficient, and the useful insight from world models —evaluating candidate actions by their predicted futures —can be retained in a small latent head rather than a pixel-level generative model.

具身 PointGoal 导航任务 [1] 是指机器人通过自身传感器从起点导航到目标位置。近年来相关系统不断规模化，参数量达到十亿级、需要多 GPU 训练 [9, 10, 3]，追求跨模态、跨场景的最大通用性。

本报告采取相反的立场：对于静态、纯深度、室内这一切片任务，一个精心设计的轻量架构在单台消费级笔记本上就足够；同时，世界模型的核心想法——以预测的未来来评价候选动作——可以被一个小型隐空间头部保留下来，而不必使用像素级生成模型。

Contributions. This paper argues for three co-dependent design choices, each quantified by a dedicated experiment:

1. **Geometric BEV as the right shared representation.** We show that a multi-channel occupancy / free-space / goal-prior BEV produced by a differentiable pinhole depth-lift strictly outperforms a pooled-feature "flat" encoder of matched parameter count, supporting the claim that navigation decisions need metric geometric state, not pixel features (Table **??**).

2. **Fast / slow dual-system decomposition.** We decompose navigation into two asynchronous policy heads —a fast reflexive *Vision-Action (VA)* head (~ 0.3 ms, proposes $K{=}5$ candidates) and a slow deliberative *World-Action (WA)* head (~ 3 ms, rolls out each candidate $H{=}3$ steps in latent space and predicts collision risk / progress / uncertainty / reachability). The paired cross-seed analysis attributes a robust $\Delta\text{SR} = +0.093 \pm 0.013$ to the slow pathway, an order of magnitude larger than its per-seed standard deviation.

3. **Analytic fusion $>$ learned fusion.** The two pathways are combined via the closed-form scalar $Q_k = \alpha s_k + \beta p_k - \gamma\sigma(r_k) - \delta u_k - \eta\sigma(d_k)$, not by a learned MLP. This preserves modular interpretability (each coefficient has a physical reading) and allows post-hoc tuning without retraining, while keeping the whole model at 1.12 M parameters and ~ 210 Hz inference.

Together, these three choices yield A*-oracle-level SR on the procedural PIB-Nav benchmark with no reinforcement learning and no multi-GPU training. A four-intervention scope study on 3D-scanned Gibson rooms quantifies where the architecture breaks down, providing a clean design boundary rather than an open-ended failure.

贡献。本文论证了三个互相支撑的设计选择，每一项都有对应实验量化：

1. 几何 **BEV** 是正确的共享表示。通过可微针孔深度投影得到的" 占用 / 自由空间 / 目标先验" 多通道 BEV，在同参数量对照下严格优于基于特征池化的" 平展" 编码器；这支持我们的论点：导航决策需要度量式几何状态，而非像素特征（见表 **??**）。

2. 快 / 慢双系统分解。我们把导航决策分解为两个异步策略头——快速反射式的视觉-动作 *(VA)* 头（~ 0.3 ms，提出 $K{=}5$ 个候选）和慢速审慎式的世界-动作 *(WA)* 头（~ 3 ms，把每个候选在隐空间推演 $H{=}3$ 步，输出碰撞风险 / 进度 / 不确定性 / 可达性）。配对跨种子分析把稳健的 $\Delta\text{SR} = +0.093 \pm 0.013$ 归因于慢路径，配对差标准差比单种子标准差小一个量级。

3. 解析融合优于学习式融合。两条通路通过闭式标量 $Q_k = \alpha s_k + \beta p_k - \gamma\sigma(r_k) - \delta u_k - \eta\sigma(d_k)$ 组合，而非通过一个 learned MLP；这保留了模块化可解释性（每个系数有物理含义），支持事后调参且不需要再训练，同时让整体模型维持在 1.12 M 参数、~ 210 Hz 推理的水平。

三者合起来在 PIB-Nav 程序化基准上达到 A* oracle 级别的 SR，既不使用强化学习，也不需要多 GPU 训练。Gibson 3D 扫描场景上的四项干预研究量化了该架构的边界，给出一个清晰的设计范围声明而非开放式失败。

2 2. Problem Formulation 问题建模

A PointGoal navigation episode places a differential-drive robot in a static indoor room. At step t the agent observes

$$o_t = (d_t,\ g_t), \qquad d_t \in \mathbb{R}^{H\times W}, \qquad g_t = (r_t, \phi_t) \in \mathbb{R}_{\geq 0} \times [-\pi, \pi),$$

where d_t is a forward-facing depth image (128×128, FOV $90°$, truncated at 3.0 m) and g_t is the goal in robot-centric polar coordinates. The action is a linear/angular velocity pair $a_t = (v_t, \omega_t) \in \mathbb{R}^2$, applied at 10 Hz.

一次 PointGoal 导航 episode 将差速驱动机器人放置于一个静态室内房间。第 t 步智能体观测

$$o_t = (d_t, g_t), \quad d_t \in \mathbb{R}^{H\times W}, \quad g_t = (r_t, \phi_t) \in \mathbb{R}_{\geq 0} \times [-\pi, \pi),$$

其中 d_t 为前向深度图（128×128、FOV $90°$、3.0 m 截断），g_t 为以机器人本体坐标系极坐标表达的目标，动作为线速/角速对 (v_t, ω_t)，10 Hz 控制。

An episode terminates on any of: (i) reaching the goal within 0.25 m (success), (ii) accumulating 10 collisions (failure), or (iii) hitting the 300-step budget (time-out). Evaluation metrics, following [1], are

$$\mathrm{SR} = \frac{1}{N}\sum_i \mathbf{1}[\mathrm{success}_i], \qquad \mathrm{SPL} = \frac{1}{N}\sum_i \mathbf{1}[\mathrm{success}_i] \cdot \frac{\ell_i^\star}{\max(\ell_i^\star, \ell_i^{\mathrm{agent}})},$$

plus the CollisionRate (fraction of episodes with ≥ 1 contact) and the PathLenRatio (agent path length / shortest path length, restricted to successful episodes with finite reference).

episode 在以下任一条件下终止：（i）到达目标 0.25 m 以内（成功）、（ii）累计 10 次碰撞（失败）、（iii）超过 300 步预算（超时）。评测指标参照 [1]：

$$\mathrm{SR} = \frac{1}{N}\sum_i \mathbf{1}[\text{成功}_i], \quad \mathrm{SPL} = \frac{1}{N}\sum_i \mathbf{1}[\text{成功}_i] \cdot \frac{\ell_i^\star}{\max(\ell_i^\star, \ell_i^{\mathrm{agent}})},$$

此外还给出 CollisionRate（至少发生一次碰撞的 episode 占比）与 PathLenRatio（成功 episode 的路径长度与最短路径长度之比，排除无效参考路径情形）。

3 3. Dual-System Architecture on a Shared BEV State 在共享 BEV 状态之上的双系统架构

The central architectural claim of this paper is that PointGoal navigation benefits from a **decomposition into two cooperating policy systems with asymmetric latency budgets**, both operating on a single shared geometric BEV representation rather than on raw camera-pixel features. Figure 1 shows the data flow.

Given an observation $o_t = (d_t, g_t)$, the shared BEV encoder (§3.1) produces a latent $\mathbf{z}_t \in \mathbb{R}^{128}$. From there, the two systems run in parallel:

- The **Fast System** —a Vision-Action (VA) head (§3.2) —produces $K{=}5$ candidate waypoints plus per-candidate logits in ~ 0.3 ms. This is a reflexive / System-1 style pathway: no rollout, no lookahead, pure stimulus-response.
- The **Slow System** —a World-Action (WA) head (§3.3) —evaluates each candidate by rolling out $H{=}3$ steps through a latent dynamics cell, predicting collision risk, goal progress, ensemble-variance uncertainty, and reachability. Its ~ 3 ms latency reflects genuine deliberation on short-horizon consequences.

The two systems are combined by an **analytic fusion rule** (§3.4) rather than a learned network; pure-pursuit then converts the selected waypoint to (v_t, ω_t). The whole model fits in 1.12 M parameters and runs at ~ 210 Hz on a consumer laptop (Table 3).

本文的核心架构主张是：PointGoal 导航应被分解为两个在共享几何 **BEV** 表示上协同工作、延迟预算不对称的策略系统，而非基于原始相机像素的单一端到端网络。图 1 给出整体数据流。

给定观测 $o_t = (d_t, g_t)$，共享 BEV 编码器（§3.1）产生隐向量 $\mathbf{z}_t \in \mathbb{R}^{128}$。两个系统自此并行：

- 快系统——视觉-动作（VA）头（§3.2）——在 ~ 0.3 ms 内产出 $K{=}5$ 个候选路点及每候选 logits；这是一条反射式、类 System-1 的通路：无推演、无前瞻、纯粹的 “输入-响应”。
- 慢系统——世界-动作（WA）头（§3.3）——通过一个隐空间动力学单元对每个候选做 $H{=}3$ 步推演，输出每步的碰撞风险、目标进度、集成方差式不确定性与可达性；~ 3 ms 的延迟对应对短程后果的真实审慎。

两个系统通过解析融合规则（§3.4）结合，而非通过 learned network；随后纯追踪控制器把胜出的路点换算成 (v_t, ω_t)。整个模型的参数量为 $1.12\,\mathrm{M}$，在消费级笔记本上约 $210\,\mathrm{Hz}$（表 3）。

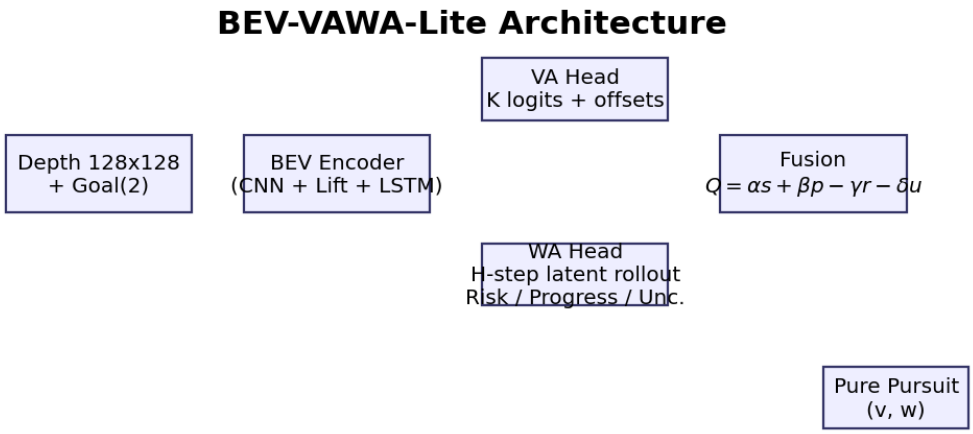

Figure 1: BEV-VAWA-Lite data flow. BEV-VAWA-Lite 数据流。

3.1 3.1 Shared Geometric BEV Encoder 共享几何 BEV 编码器

The encoder consists of a 3-block depth CNN with channel widths $32\to64\to96$ and 5×5, 3×3, 3×3 kernels at stride 2. The intermediate feature map is lifted to a top-down feature of resolution 64×64 via adaptive pooling (this is the "pseudo-BEV" operator used on the PIB-Nav main line; a geometric replacement is described in §10). The lifted feature is concatenated with the embedded goal vector, flattened, and passed through a *single LSTM cell* to obtain the latent state $\mathbf{z}_t \in \mathbb{R}^{128}$. We use an LSTM rather than a GRU because on Apple MPS the GRU CUDA-backed kernel is missing and the CPU fallback is $\sim 3\times$ slower.

编码器由 3 段深度 CNN（通道数 $32\to64\to96$，卷积核分别 5×5, 3×3, 3×3，步长 2）构成。中间特征通过自适应池化被提升到 64×64 的俯视图（此即 PIB-Nav 主线采用的伪**-BEV** 算子；几何化替代方案见 §10）。俯视图特征与目标向量嵌入拼接、展平后，通过单层 **LSTMCell** 得到隐状态 $\mathbf{z}_t \in \mathbb{R}^{128}$。采用 LSTM 而非 GRU 的原因是在 Apple MPS 上 GRU 缺少 CUDA 后端，CPU 回退要慢约 3 倍。

3.2 3.2 Fast System: Vision-Action (VA) Head 快系统：视觉-动作 (VA) 头

The VA head is a small MLP that reads $\mathbf{z}_t$ and outputs (i) $K{=}5$ logits $s_k \in \mathbb{R}$ and (ii) $K{=}5$ small offset vectors $\Delta_k \in \mathbb{R}^2$, $\|\Delta_k\|_\infty \le 0.3\,\mathrm{m}$. The $K{=}5$ *anchor* waypoints are fixed in robot-centric coordinates on a 120° front-facing fan at radius $R{=}1.5\,\mathrm{m}$:

$$a_k = (R\cos\theta_k,\ R\sin\theta_k), \quad \theta_k = -60^\circ + k \cdot 30^\circ,\ k = 0, \ldots, 4. \tag{1}$$

The actual per-candidate waypoint passed downstream is $w_k = a_k + \Delta_k$.

VA 头是一个小型 MLP，从 $\mathbf{z}_t$ 读出：(i) $K{=}5$ 个 logits s_k；(ii) $K{=}5$ 个小偏移 $\Delta_k \in \mathbb{R}^2$，$\|\Delta_k\|_\infty \le 0.3\,\mathrm{m}$。$K{=}5$ 个锚点路径点在机器人自身坐标系下固定在半径 $R{=}1.5\,\mathrm{m}$ 的 120° 前向扇形上（式 (1)）；实际传给下游的候选点为 $w_k = a_k + \Delta_k$。

3.3 3.3 Slow System: World-Action (WA) Head 慢系统：世界-动作 (WA) 头

For each of the K candidates the WA head performs a short-horizon rollout. The candidate is embedded ($\mathbb{R}^2 \to \mathbb{R}^{16}$) and consumed, together with the current latent $\mathbf{z}_t$, by a *separate* LSTMCell for $H{=}3$ steps. Write $\hat{\mathbf{z}}_{t+\tau,k}$ for the hidden state at rollout step $\tau \in \{1, 2, 3\}$ conditioned on candidate k. Three heads read the *final* rollout hidden state:

- **Risk head** —3 parallel linear heads form an ensemble of binary collision-risk logits. Let $\hat{r}_k = \frac{1}{3}\sum_{m=1}^{3} \hat{r}_k^{(m)}$ be the mean.
- **Progress head** —scalar predicting goal-distance reduction $\hat{p}_k \in \mathbb{R}$.
- **Uncertainty** —ensemble variance $\hat{u}_k = \mathrm{Var}_m\big[\sigma(\hat{r}_k^{(m)})\big]$, no separate parameters.

The head has roughly $50\,\mathrm{k}$ parameters —about 4.5% of the total $1.12\,\mathrm{M}$ model.

对每个候选，WA 头进行一次短程推演。候选被嵌入（$\mathbb{R}^2 \to \mathbb{R}^{16}$）后，与当前隐向量 $\mathbf{z}_t$ 一起馈入一个独立的 LSTMCell，展开 $H{=}3$ 步；记 $\hat{\mathbf{z}}_{t+\tau,k}$ 为条件在候选 k 上、第 τ 步的隐状态。随后三个头从最后一步隐状态读出：

- 风险头——3 路并行的碰撞二分类 logits 形成集成，均值记作 $\hat{r}_k$；
- 进度头——标量 $\hat{p}_k$，预测目标距离缩减量；
- 不确定度——集成 sigmoid 方差 $\hat{u}_k = \mathrm{Var}_m[\sigma(\hat{r}_k^{(m)})]$，无额外参数。

WA 头参数量约 5 万，约占整机 $1.12\,\mathrm{M}$ 参数的 4.5%。

3.4 3.4 Analytic Fusion of the Two Systems 两系统的解析融合

Let $\tilde{s}_k = \mathrm{softmax}(s)_k$. Each candidate receives a score

$$Q_k \;=\; \alpha\,\tilde{s}_k \;+\; \beta\,\hat{p}_k \;-\; \gamma\,\sigma(\hat{r}_k) \;-\; \delta\,\hat{u}_k, \tag{2}$$

with fixed weights $(\alpha, \beta, \gamma, \delta) = (1.0,\ 1.5,\ 2.0,\ 0.5)$. The argmax candidate $k^\star = \arg\max_k Q_k$ is passed as a goal to a pure-pursuit controller that outputs (v_t, ω_t). The weights were chosen by a short manual grid on the Stage-A checkpoint's validation set; automating this choice is left to future work.

记 $\tilde{s}_k = \mathrm{softmax}(s)_k$，则每个候选得分为

$$Q_k = \alpha\tilde{s}_k + \beta\hat{p}_k - \gamma\sigma(\hat{r}_k) - \delta\hat{u}_k,$$

固定权重 $(\alpha, \beta, \gamma, \delta) = (1.0, 1.5, 2.0, 0.5)$。argmax $k^\star$ 对应的候选被送入纯追踪控制器产出 (v_t, ω_t)。权重值由在 Stage-A 验证集上的一次小范围手工格点搜索确定，自动化选择留作未来工作。

4 4. Mathematical Details 数学原理

4.1 4.1 Geometry Lift (Gibson-v2 track) 几何投影（Gibson-v2 路线）

On the Gibson-v2 path the "adaptive-pool" pseudo-BEV is replaced by a differentiable pinhole back-projection. Given depth $d_t(u, v)$ with calibrated intrinsics f_x, f_y, c_x, c_y, each valid pixel (u, v) projects to a 3-D camera-frame point

$$X_c = \frac{(u-c_x)\,d_t(u,v)}{f_x}, \quad Y_c = \frac{(v-c_y)\,d_t(u,v)}{f_y}, \quad Z_c = d_t(u, v).$$

Dropping Y_c (the height) projects the point onto the floor plane, giving a BEV sample $(x_{\text{bev}}, y_{\text{bev}}) = (Z_c, X_c)$. Samples outside the grid window $[0, 3.0] \times [-1.5, 1.5]$ m or with $d_t \le d_{\min}$ are masked out. The grid is 64×64, so the cell size is $\sim 4.7\,\mathrm{cm} \times 4.7\,\mathrm{cm}$.

在 Gibson-v2 路线上，自适应池化的伪-BEV 被替换为可微的针孔反投影。给定深度 $d_t(u, v)$ 与已校准内参 f_x, f_y, c_x, c_y，每个有效像素 (u, v) 投影到相机坐标系下的三维点 (X_c, Y_c, Z_c)：

$$X_c = \frac{(u-c_x)d_t(u,v)}{f_x},\ Y_c = \frac{(v-c_y)d_t(u,v)}{f_y},\ Z_c = d_t(u, v).$$

舍去高度 Y_c 即投影到地面，得到 BEV 样本 $(x_{\text{bev}}, y_{\text{bev}}) = (Z_c, X_c)$。超出格点窗口 $[0, 3.0] \times [-1.5, 1.5]$ m 或 $d_t \le d_{\min}$ 的样本被屏蔽。网格为 64×64，即每格约 $4.7\,\mathrm{cm} \times 4.7\,\mathrm{cm}$。

Three output channels are produced: **(1) occ** —occ$[i, j] = \min\{1, \mathrm{count}[i, j]\}$ via a differentiable `scatter_add`; **(2) free** —for each depth column we mark cells between the camera origin and the first-hit cell along its BEV-plane projection with a discrete Bresenham traversal; **(3) goal prior** —a truncated Gaussian sector heatmap centred at the goal bearing ϕ_t with $\sigma_\phi = 0.35\,\mathrm{rad}$. At training time an optional "channels-enabled" mask (`[1,1,1]` by default) allows single-channel ablations.

几何提升产出三个通道：（**1**）**occ**——以可微 `scatter_add` 得 $\mathrm{occ}[i,j]=\min\{1,\mathrm{count}[i,j]\}$；（**2**）**free**——对每个深度列，在其 BEV 平面投影上用离散 Bresenham 追迹，将相机原点到首次击中格之间的空闲格打上 1；（**3**）**goal-prior**——以目标方位 ϕ_t 为中心、$\sigma_\phi=0.35\,\mathrm{rad}$ 的截断高斯扇形热图。训练时一个可选的 `channels-enabled` 掩码（默认 `[1,1,1]`）可用于通道消融。

4.2 4.2 Best-K Supervision and the Huber Offset Loss 最佳-K 监督与 Huber 偏移损失

The expert trajectory provides a target waypoint $w_t^\star$. The target anchor index is

$$k^\star \;=\; \underset{k=0,\dots,K-1}{\arg\min}\;\|a_k-w_t^\star\|_2, \tag{3}$$

and VA is trained with cross-entropy on s plus a Huber regression on the selected candidate's offset:

$$\mathcal{L}_{\mathrm{VA}} \;=\; \underbrace{-\log\tilde{s}_{k^\star}}_{\mathcal{L}_{\mathrm{CE}}} \;+\; \lambda_{\mathrm{off}}\cdot\underbrace{H_\tau\big(w_{k^\star}-w_t^\star\big)}_{\mathcal{L}_{\mathrm{Huber}}}, \qquad \lambda_{\mathrm{off}}=0.5, \tag{4}$$

with H_τ the element-wise Huber loss with knee $\tau=0.1\,\mathrm{m}$. The rationale for Huber over MSE is outlier robustness against expert samples near obstacles where the waypoint resampling can jitter.

专家轨迹提供目标路径点 $w_t^\star$，目标锚点索引为 $k^\star=\arg\min_k\|a_k-w_t^\star\|_2$；VA 的损失为 logits 的交叉熵加选中候选偏移的 Huber 回归：

$$\mathcal{L}_{\mathrm{VA}}=-\log\tilde{s}_{k^\star}+\lambda_{\mathrm{off}}H_\tau(w_{k^\star}-w_t^\star),\quad \lambda_{\mathrm{off}}=0.5,\ \tau=0.1\,\mathrm{m}.$$

选择 Huber 而非 MSE 的理由是：对于专家在障碍边沿的重采样抖动具有更好的鲁棒性。

4.3 4.3 WA Losses WA 损失

For each candidate k we compute labels using the inflated occupancy grid: $r_k\in\{0,1\}$ (collision between robot pose and a_k) and $p_k\in[-1,1]$ (normalised geodesic-distance reduction to the goal). The WA loss is

$$\mathcal{L}_{\mathrm{WA}} \;=\; \underbrace{\tfrac{1}{K\cdot M}\sum_{k,m}\mathrm{BCE}\big(\hat{r}_k^{(m)},r_k\big)}_{\mathcal{L}_{\mathrm{risk}}} \;+\; \underbrace{\tfrac{1}{K}\sum_{k}\big(\hat{p}_k-p_k\big)^2}_{\mathcal{L}_{\mathrm{prog}}}, \tag{5}$$

where $M=3$ is the ensemble size. No explicit loss trains $\hat{u}_k$; it is defined as the ensemble variance of the sigmoids of $\hat{r}_k^{(m)}$.

对每个候选 k，利用膨胀占据栅格生成标签：$r_k\in\{0,1\}$（从当前机器人位姿到 a_k 是否碰撞）与 $p_k\in[-1,1]$（归一化地测距离削减量）。WA 损失为

$$\mathcal{L}_{\mathrm{WA}}=\tfrac{1}{KM}\sum_{k,m}\mathrm{BCE}(\hat{r}_k^{(m)},r_k)+\tfrac{1}{K}\sum_k(\hat{p}_k-p_k)^2,$$

其中 $M=3$ 为集成规模；不确定度 $\hat{u}_k$ 不参与训练，它被定义为集成 sigmoid 的方差。

4.4 4.4 Gibson-v2 Extensions: $\mathcal{L}_{\mathrm{dyn}}$ and the Dead-end Head Gibson-v2 扩展：$\mathcal{L}_{\mathrm{dyn}}$ 与 dead-end 头

On the Gibson-v2 path two additional losses are added to supervise the *intermediate* rollout latents of the WA branch and to introduce reachability awareness. Let $z_{t+\tau}^{\mathrm{gt}}$ denote the encoder latent computed (no-grad) from future depth frames $d_{t+\tau}$ obtained by teleporting the simulator along the resampled expert path. The latent-dynamics loss is

$$\mathcal{L}_{\mathrm{dyn}} \;=\; \frac{1}{H}\sum_{\tau=1}^{H}\big\|\hat{\mathbf{z}}_{t+\tau,k^\star}-z_{t+\tau}^{\mathrm{gt}}\big\|_2^2, \tag{6}$$

applied only to the expert-selected anchor to avoid degenerate cross-candidate collapse. A dead-end head $\mathrm{DE}(\hat{\mathbf{z}}_{t+H,k}) \to d_k \in \mathbb{R}$ is trained on a binary label $\ell_k^{\mathrm{DE}} \in \{0,1\}$ produced by `pathfinder.find_path` after a candidate teleport —label $= 1$ iff there is no navigable path from the candidate endpoint to the goal. Its loss is $\mathcal{L}_{\mathrm{DE}} = \frac{1}{K}\sum_k \mathrm{BCE}(d_k, \ell_k^{\mathrm{DE}})$. Fusion is extended to $Q_k^{\mathrm{v2}} = Q_k - \eta\,\sigma(d_k)$ with $\eta = 1.0$.

Gibson-v2 路线额外引入两个损失，用于监督 WA 分支的中间 推演隐状态，并引入可达性意识。记 $z_{t+\tau}^{\mathrm{gt}}$ 为在专家重采样路径上前进 τ 步、对该处深度帧做无梯度编码得到的“未来真值隐向量”。隐动力学损失为

$$\mathcal{L}_{\mathrm{dyn}} = \frac{1}{H}\sum_{\tau} \|\hat{\mathbf{z}}_{t+\tau,k^\star} - z_{t+\tau}^{\mathrm{gt}}\|_2^2,$$

仅在专家锚点上施加，避免跨候选坍缩。dead-end 头 $\mathrm{DE}(\hat{\mathbf{z}}_{t+H,k}) \to d_k$ 训练于 Habitat `pathfinder.find_path` 生成的二分标签 ℓ_k^{DE}（候选点到目标是否仍可达）：$\mathcal{L}_{\mathrm{DE}} = \frac{1}{K}\sum_k \mathrm{BCE}(d_k, \ell_k^{\mathrm{DE}})$。融合规则扩展为 $Q_k^{\mathrm{v2}} = Q_k - \eta\sigma(d_k)$，$\eta = 1.0$。

4.5 4.5 Pure-Pursuit Controller 纯追踪控制器

Given a selected candidate $w = (x_w, y_w)$ expressed in robot-centric coordinates, the pure-pursuit rule [4] outputs

$$\omega \;=\; \frac{2\,v\,y_w}{x_w^2 + y_w^2}, \qquad v \;=\; \min\Big(v_{\max},\; k_v\sqrt{x_w^2 + y_w^2}\Big), \tag{7}$$

with $k_v = 0.8$ and $v_{\max} = 0.4\,\mathrm{m/s}$. The form is algebraic, has no learnable parameters, and introduces a controller-level bottleneck that shows up in the A* upper bound (§8).

给定机器人坐标系下的路径点 $w = (x_w, y_w)$，纯追踪控制 [4] 给出

$$\omega = \frac{2vy_w}{x_w^2+y_w^2}, \quad v = \min(v_{\max}, k_v\sqrt{x_w^2+y_w^2}),$$

$k_v = 0.8$，$v_{\max} = 0.4\,\mathrm{m/s}$。该形式为代数式、无可学习参数，但会构成 控制器层面的瓶颈，这在 A* 上限中明显可见（见 §8）。

5 5. Training Pipeline 训练流程

5.1 5.1 Data Generation (PIB-Nav) 数据生成（PIB-Nav）

PIB-Nav is a procedural MuJoCo-based benchmark built for this project. Rooms are axis-aligned rectangles of uniformly sampled side in $[5, 7]$ m, populated with $U(3, 6)$ obstacles of uniformly sampled side $[0.4, 1.2]$ m. The robot is a differential-drive base of radius 0.20 m with a forward-facing 128×128 depth camera.

PIB-Nav 是本项目为本工作构建的一个 MuJoCo 程序化导航基准。房间为轴对齐矩形，边长在 $[5, 7]$ m 均匀采样，内含 $U(3, 6)$ 个障碍物，障碍边长在 $[0.4, 1.2]$ m 均匀采样。机器人半径 0.20 m，差速驱动，配备 128×128 前向深度相机。

For each of 1000 procedural rooms we sample 64 training poses as follows: (i) A*-plan a collision-free path on the inflated occupancy grid; (ii) Chaikin-smooth twice; (iii) resample at arclength 0.1 m; (iv) at each chosen arclength, teleport the robot to the pose with small Gaussian noise and render depth. Per-sample labels are: expert waypoint $w_t^\star$ = path point 1.5 m ahead, best-$k^\star$ index, and per-candidate (r_k, p_k) from the occupancy grid. Total dataset size: 64,000 samples, generated in ~ 5.5 h on the M4 laptop. Shards are written as `.npz` files, one per room.

对每个 1000 个房间，按如下步骤采集 64 个样本：（i）在膨胀占据栅格上 A* 规划出一条无碰撞路径；（ii）做两次 Chaikin 平滑；（iii）按弧长 0.1 m 重采样；（iv）在每个采样点，把机器人瞬移到该位姿（带小高斯噪声）并渲染深度。每样本的监督标签包括：前瞻 1.5 m 的专家路径点 $w_t^\star$、最佳 $k^\star$ 索引，以及候选级 (r_k, p_k) 标签（由占据栅格生成）。数据集总规模 64,000 样本，在 M4 上耗时约 5.5 小时生成；每个房间为一个 `.npz` 分片。

5.2 5.2 Three-Stage Curriculum 三阶段训练课程

Stage A —VA supervision. The encoder plus VA head are trained with $\mathcal{L}_{\text{VA}}$ on all samples for 20 epochs. **Stage B —WA supervision.** The Stage-A encoder is *frozen* and the WA head is trained with $\mathcal{L}_{\text{WA}}$ for 20 epochs; on the Gibson-v2 path $\mathcal{L}_{\text{dyn}}$ and $\mathcal{L}_{\text{DE}}$ are added with weights 0.5. **Stage C —joint fine-tune.** The last encoder block and both heads are unfrozen and trained together for 8 epochs with the joint loss; on Gibson-v2 the $\mathcal{L}_{\text{dyn}}$ / $\mathcal{L}_{\text{DE}}$ weights are reduced to 0.2 to stabilise joint optimisation. Optimiser: AdamW, $\text{lr} = 3\text{e}{-4}$, $\text{wd} = 1\text{e}{-5}$, grad-clip 1.0, batch size 64. Total wall-clock training on the M4: $\sim 3\,\text{h}$.

Stage A——VA 监督：用 $\mathcal{L}_{\text{VA}}$ 联合训练编码器与 VA 头 20 epoch。**Stage B——WA 监督**：冻结 Stage-A 编码器，只训练 WA 头 20 epoch；Gibson-v2 路线再加入 $\mathcal{L}_{\text{dyn}}$ 与 $\mathcal{L}_{\text{DE}}$，权重 0.5。**Stage C——联合微调**：解冻编码器最后一段和两头部，联合损失训练 8 epoch；Gibson-v2 路线把 $\mathcal{L}_{\text{dyn}}$、$\mathcal{L}_{\text{DE}}$ 的权重降到 0.2 以稳定联合优化。优化器 AdamW，$\text{lr} = 3\text{e}{-4}$，$\text{wd} = 1\text{e}{-5}$，梯度裁剪 1.0，batch 64；M4 整套训练约 3 小时。

Algorithm 1 Three-Stage Training 三阶段训练

```
initialise encoder E, VA head V, WA head W
for epoch = 1, ..., 20 do                                   ▷ Stage A
    update E, V with L_VA
end for
freeze E
for epoch = 1, ..., 20 do                                   ▷ Stage B
    update W with L_WA   (+ L_dyn, L_DE on Gibson-v2)
end for
unfreeze last block of E
for epoch = 1, ..., 8 do                                    ▷ Stage C
    update {E_last, V, W} with joint loss
end for
```

6 6. Reactive Safety Layer (v3) 反应式安全层 (v3)

Motivation. Inspection of the 55 failures of the Stage-C checkpoint at seed 12345 showed $\sim$ 95% were collision-budget exhaustion, not time-outs or goal divergence. The residual failures are amenable to a purely *reactive* override that never rewrites the policy's training signal.

动机。在种子 12345 上，Stage-C 检查点的 55 次失败中约 95% 是碰撞预算耗尽，而非超时或目标偏离。剩余失败对一个纯反应式 外挂模块是高度可纠正的，后者不需要改动训练信号。

Design. At each step the safety layer observes d_t and the policy's proposed (v, ω), and outputs a modified (v', ω'). Depth pixels outside the valid range are discarded. Statistics use the 5th percentile to be robust to MuJoCo depth misses.

设计。每步安全层观测 d_t 与策略给出的 (v, ω)，输出修正后的 (v', ω')。越界深度像素先被丢弃，关键统计量取剩余像素的 5 百分位，以抵抗 MuJoCo 偶发的深度缺失。

Forward APF. Define the forward band as the middle 60% ($\pm 27^\circ$ at FOV 90°) of columns and the middle 40% of rows. Let d_{min} be the 5th-percentile clearance in this band. When $d_{\text{min}} < d_{\text{warn}} = 0.60\,\text{m}$ we emit a forward correction proportional to left-right asymmetry $a \in [-1, 1]$ and an urgency ramp $\kappa = \text{clip}((d_{\text{warn}} - d_{\text{min}})/(d_{\text{warn}} - d_{\text{near}}), 0, 1)$, with $d_{\text{near}} = 0.35\,\text{m}$:

$$\omega_{\text{fwd}} \;=\; a \cdot \omega_{\text{max}} \cdot (0.5 + 0.5\,\kappa). \tag{8}$$

A fallback sign (policy's own ω, then a fixed left bias) prevents spin-in-place lock when $|a|$ is below a tiebreaker threshold.

前向 *APF*。定义前向带为列方向 60%（FOV 下约 $\pm 27^\circ$）、行方向 40% 的中心区域。记 d_{min} 为该区域剩余像素的 5 百分位净距。当 $d_{\text{min}} < d_{\text{warn}} = 0.60\,\text{m}$ 时，根据左右不对称度 $a \in [-1, 1]$ 与紧迫度

$\kappa = \mathrm{clip}((d_{\mathrm{warn}} - d_{\mathrm{min}})/(d_{\mathrm{warn}} - d_{\mathrm{near}}), 0, 1)$（$d_{\mathrm{near}} = 0.35\,\mathrm{m}$）输出前向修正 $\omega_{\mathrm{fwd}} = a\omega_{\mathrm{max}}(0.5 + 0.5\kappa)$；当 $|a|$ 小于阈值时回退到策略自身的 ω 方向，再退化为固定左偏，避免原地自旋。

Lateral scrape guard. The forward arc alone is blind to episodes where the front is clear but the shoulder grazes an obstacle during a turn. We add two lateral sectors covering the outer 20% of columns on each side, with closeness scores $c_\ell, c_r \in [0, 1]$ derived from the same statistic and a side warning distance $d_{\mathrm{side}} = 0.40\,\mathrm{m}$. The side correction is always evaluated and summed with the forward term; a mild speed taper is applied:

$$\omega_{\mathrm{side}} = (c_r - c_\ell)\, g\, \omega_{\mathrm{max}}, \qquad v_{\mathrm{mult}} = 1 - (1 - \tau_v)\max(c_\ell, c_r), \tag{9}$$

$$\omega' = \mathrm{clip}(\omega + \omega_{\mathrm{fwd}} + \omega_{\mathrm{side}},\, -\omega_{\mathrm{max}},\, +\omega_{\mathrm{max}}), \qquad v' = v_{\mathrm{new}} \cdot v_{\mathrm{mult}}, \tag{10}$$

with $(g, \tau_v) = (0.6, 0.85)$. Importantly, linear velocity is *never zeroed* in the innermost band —the controller still advances at $v = 0.3\, v_{\mathrm{max}}$ while rotating, which empirically eliminates the "spin-in-place" lock mode that plagued earlier safety variants.

侧向擦碰保护。仅靠前向弧无法覆盖"前方开阔但肩部在转弯时擦障"的 episode。为此我们引入两个侧向扇区，各覆盖左右外侧 20% 列，依据相同统计量定义贴近度 $c_\ell, c_r \in [0, 1]$，侧向告警距离 $d_{\mathrm{side}} = 0.40\,\mathrm{m}$。侧向修正恒定求值并与前向项相加，且附带速度轻度缩减：

$$\omega_{\mathrm{side}} = (c_r - c_\ell) g \omega_{\mathrm{max}},\ v_{\mathrm{mult}} = 1 - (1 - \tau_v)\max(c_\ell, c_r),$$

$(g, \tau_v) = (0.6, 0.85)$。关键设计：在最内 **danger** 带中线速仍保持 $v = 0.3 v_{\mathrm{max}}$ 边转边走，经验上彻底消除了早期安全版本中的"原地自旋死锁"。

7 7. Experimental Setup 实验设置

Benchmark. PIB-Nav test suite: 100 procedural rooms held out from training, seeded. Success threshold 0.25 m, collision budget 10, step budget 300.

基准。PIB-Nav 测试集：100 个测试房间（从训练池中独立采样），按种子确定。成功阈值 0.25 m，碰撞预算 10，步预算 300。

Methods under comparison. *$A^\star$ Upper Bound* (oracle planner replanning on inflated occupancy every step, tracked by the same pure-pursuit controller), *$A^\star$ + Safety* (same, with reactive safety layer), *BEV-VAWA (full)* (the learned model), *BEV-VAWA + Safety*, and three imitation-style baselines sharing most of the encoder / training pipeline with our method: *FPV-BC* (front-pixel CNN $\rightarrow$ 5-way discrete action + offset), *BEV-BC* (same head but fed our BEV latent), and *BEV-VA* (BEV latent + the VA head, i.e. our full model with the WA branch surgically removed). All three baselines are trained with the same 20-epoch Stage-A recipe as the VA head in our model and evaluated at the same four seeds (see Table 1).

对比方法。 *$A^\star$* 上限（每步在膨胀占据栅格上重规划并用同一纯追踪控制器跟踪）、*$A^\star$ + Safety*、*BEV-VAWA*（完整模型）、*BEV-VAWA + Safety*，以及三个共享大部分编码器 / 训练管线的模仿式基线：*FPV-BC*（前视像素 CNN $\rightarrow$ 5 向离散动作 + 偏移）、*BEV-BC*（同一头部但输入为我们的 BEV 潜表示）、*BEV-VA*（BEV 潜表示 + VA 头部；即把 WA 分支移除后的完整模型）。三者均与我们模型的 VA 头部共用 20 epoch 的 Stage-A 训练配方，并在同样的 4 种子上评测，见表 1。

Seeds. For the two learned-policy rows we use four seeds $\{12345, 42, 7, 31337\}$, 100 episodes each, and report mean $\pm$ sample standard deviation. A* is deterministic: a single evaluation per configuration. Ablations are run at the single seed 12345 and interpreted as *paired deltas* to the full-model row at the same seed — per-seed offset cancels by construction.

种子。两行学习策略使用 4 种子 $\{12345, 42, 7, 31337\}$，每种子 100 episode，报告 mean $\pm$ 样本标准差。A* 为确定性，每配置一次评测。消融仅在 12345 种子上跑，用 同种子配对差解读——种子偏移自然抵消。

8 8. Results 结果

8.1 8.1 Main Table 主表

Table 1: Primary closed-loop results on PIB-Nav. Learned-policy rows marked "mean 4 seeds" aggregate $\{12345, 42, 7, 31337\}$; A* rows are deterministic. 在 PIB-Nav 上的主闭环结果。标有 "mean 4 seeds" 的行为 $\{12345, 42, 7, 31337\}$ 四种子均值；A* 行为确定性评测。

Method	SR ↑	SPL ↑	Coll ↓	PLR	Lat. (ms)
A* Upper Bound	0.48	0.47	0.54	0.89	2.76
A* + Safety	0.50	0.49	0.50	0.90	2.63
Imitation / reactive baselines —mean 4 seeds					
FPV-BC (mean 4 seeds)	0.35 ± 0.03	0.34 ± 0.03	0.69 ± 0.03	0.94	1.56
BEV-BC (mean 4 seeds)	0.33 ± 0.04	0.32 ± 0.04	0.69 ± 0.05	0.92	4.42
BEV-VA (mean 4 seeds)	0.33 ± 0.03	0.32 ± 0.03	0.69 ± 0.04	0.92	4.13
Ablations —single seed 12345, n=100					
BEV-VAWA (no_wa)	0.39	0.38	0.63	0.92	6.00
BEV-VAWA (no_unc)	0.45	0.44	0.58	0.92	5.57
BEV-VAWA (h1)	0.44	0.43	0.58	0.91	5.03
BEV-VAWA (full)	0.45	0.44	0.58	0.92	5.54
BEV-VAWA (full + Safety)	0.53	0.52	0.50	0.91	6.05
Cross-seed —mean 4 seeds					
BEV-VAWA (full, mean 4 seeds)	0.40 ± 0.05	0.39 ± 0.05	0.65 ± 0.05	0.92	5.76
BEV-VAWA (full+Safety, mean 4 seeds)	$\mathbf{0.49 \pm 0.05}$	$\mathbf{0.49 \pm 0.05}$	$\mathbf{0.57 \pm 0.06}$	0.92	6.11

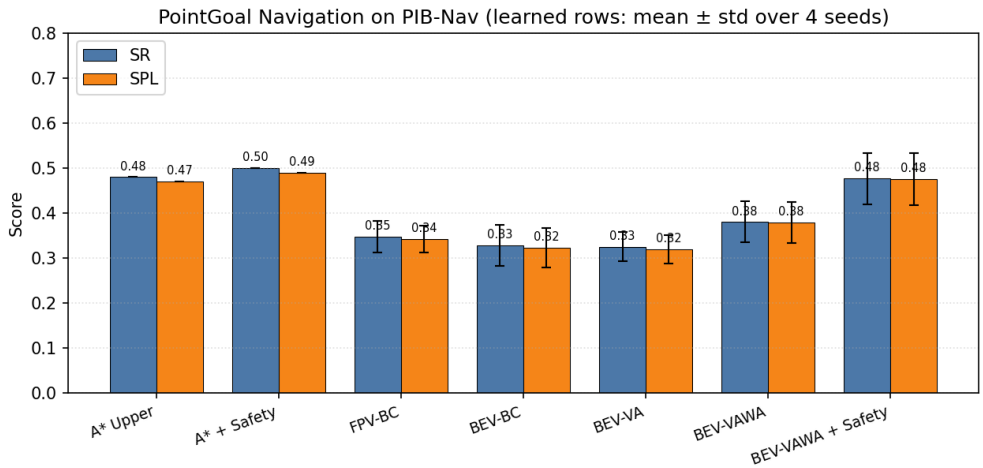

Figure 2: Main SR/SPL comparison. Learned-policy error bars are cross-seed σ. 主 SR/SPL 对比，学习策略的误差棒为四种子 σ。

Baselines vs. our method. All three imitation baselines cluster tightly at SR ≈ 0.33–0.35, essentially indistinguishable from each other at n=100. Moving the encoder from raw FPV pixels to the shared BEV latent (*FPV-BC* → *BEV-BC*) is neutral; adding the VA multi-waypoint head (*BEV-BC* → *BEV-VA*) is also neutral. It is only when the WA branch contributes a risk / progress / uncertainty score into the analytic fusion Q_k that SR jumps to 0.40 ± 0.05, and adding the safety layer lifts it further to 0.49 ± 0.05. This is consistent with the central claim of the paper: the WA branch is the component that does load-bearing work, and the improvement is not attributable to either the BEV lift or the VA head alone. Latency-wise, all BEV-based variants sit around 4–6 ms —well below our real-time budget.

基线对比。三条模仿基线的 SR 聚集在 0.33–0.35，在 n=100 下彼此基本不可区分。把编码器从原始 FPV 像素换成共享 BEV 潜表示（*FPV-BC* → *BEV-BC*）是中性的；进一步引入 VA 多路点头部

（*BEV-BC* $\rightarrow$ *BEV-VA*）也是中性的。唯有在 WA 分支把风险/进度/不确定性分数注入到解析融合 Q_k 中时，SR 才跃升至 0.40 ± 0.05；再叠加安全层后到达 0.49 ± 0.05。这与论文的核心论点一致：WA 分支才是真正承重的组件，提升不能归因于 BEV 抬升或 VA 头部之一。所有 BEV 基础方法的延迟均在 4–6 ms 以内，远低于实时预算。

8.2 8.2 Seed Stability and the Safety Layer 种子稳定性与安全层

The test set is deliberately small (n=100), so per-seed absolute SR fluctuates by ~ 5 pp. The *paired* delta introduced by the safety layer, however, has $\sigma_\Delta = 0.013$, roughly $4\times$ smaller than the raw per-seed variance (Table 2, Fig. 3). We therefore treat the cross-seed paired ΔSR —not the headline-seed SR of any single configuration —as the primary claim of the safety study.

测试集规模较小（n=100），各种子绝对 SR 浮动 ~ 5 pp；但安全层带来的配对差在各种子间仅有 $\sigma_\Delta = 0.013$，约为原始 σ 的 $1/4$ （表 2、图 3）。因此我们把四种子配对 ΔSR 而非单个配置的单种子 SR 视为安全层的主要证据。

Table 2: Per-seed paired SR (PIB-Nav, n=100). 逐种子配对 SR（PIB-Nav，n=100）。

Seed	full SR	+Safety SR	ΔSR	ΔColl
12345	0.45	0.53	$+0.08$	-0.08
42	0.34	0.43	$+0.09$	-0.06
7	0.37	0.46	$+0.09$	-0.08
31337	0.43	0.54	$+0.11$	-0.07
mean $\pm$ std	0.40 ± 0.05	0.49 ± 0.05	$+0.093 \pm 0.013$	-0.072 ± 0.010

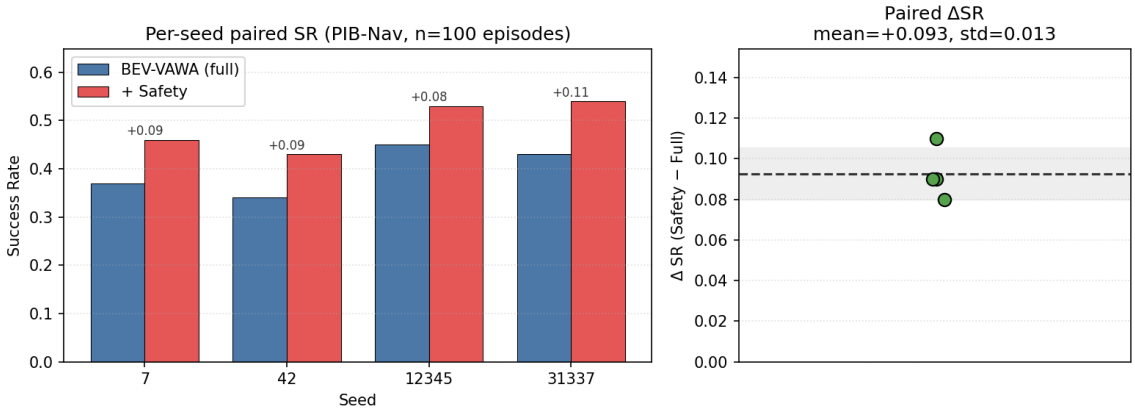

Figure 3: Left: per-seed paired SR for BEV-VAWA (full) vs. +Safety. Right: ΔSR distribution across seeds —mean (dashed), $\pm$std (shaded). 左：逐种子配对 SR 柱状图；右：ΔSR 跨种子分布，虚线为均值、阴影为 $\pm$std。

8.3 8.3 Ablations 消融

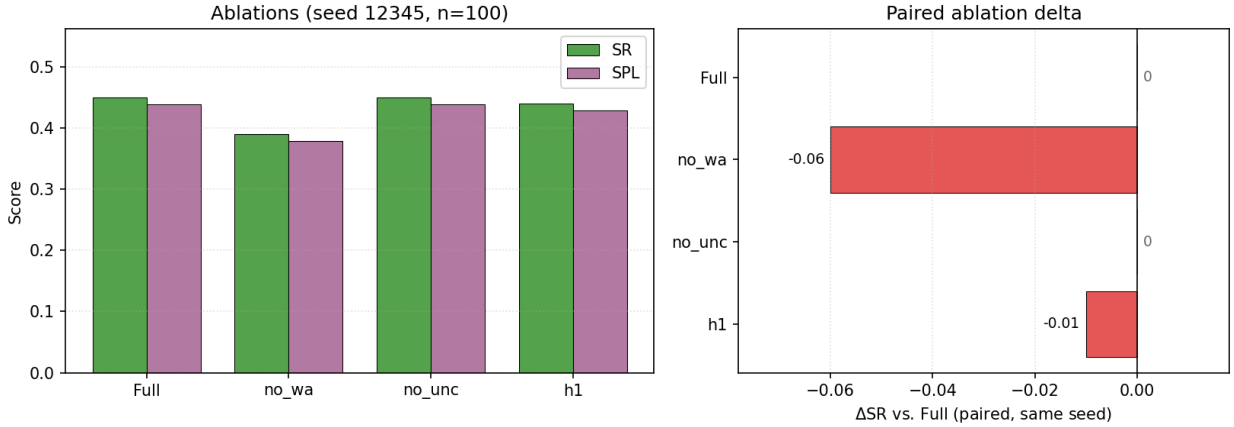

Figure 4: Left: absolute SR/SPL of each ablation at seed 12345. Right: paired ΔSR vs. Full. The no_unc row is byte-identical to full at seed 12345, indicating that the uncertainty term $\delta\hat{u}$ does not influence test-time candidate ranking as currently calibrated. 左：各消融在种子 12345 的绝对 SR/SPL；右：相对 Full 的配对 ΔSR。no_unc 行在 12345 种子上与 full 逐字节等价，说明当前不确定度项在测试时无法影响候选排序。

The ablations tell a clean story: removing the WA branch entirely (no_wa) drops SR by 6 pp, confirming that the world-action re-ranking carries real signal. Shortening the rollout horizon to $H{=}1$ (h1) costs only 1 pp —consistent with the absence of supervision on intermediate rollout latents in the main track; this is the observation that directly motivates $\mathcal{L}_{\text{dyn}}$ in the Gibson-v2 path. Zeroing the uncertainty weight δ (no_unc) changes no candidate ranking at this seed: the ensemble-variance uncertainty signal is not influential at test time in its current calibration, and is flagged for either re-calibration or retirement on the v2 path.

消融给出了干净的结论：完全去掉 WA 分支（no_wa）降 6 pp，证实 WA 再排序承载真实信号；将推演步数缩到 $H = 1$ （h1）仅降 1 pp——与主线未对中间隐状态施加监督的事实一致，这正是 Gibson-v2 路线引入 $\mathcal{L}_{\text{dyn}}$ 的动机。把不确定度权重置零（no_unc）在本种子上未改变任何候选排序：当前标定下集成方差式不确定度在测试时并未发挥作用，已标记在 v2 路线上重新校准或彻底弃用。

8.4 8.4 Efficiency and the Fast / Slow Latency Asymmetry 效率与快慢双系统的延迟不对称

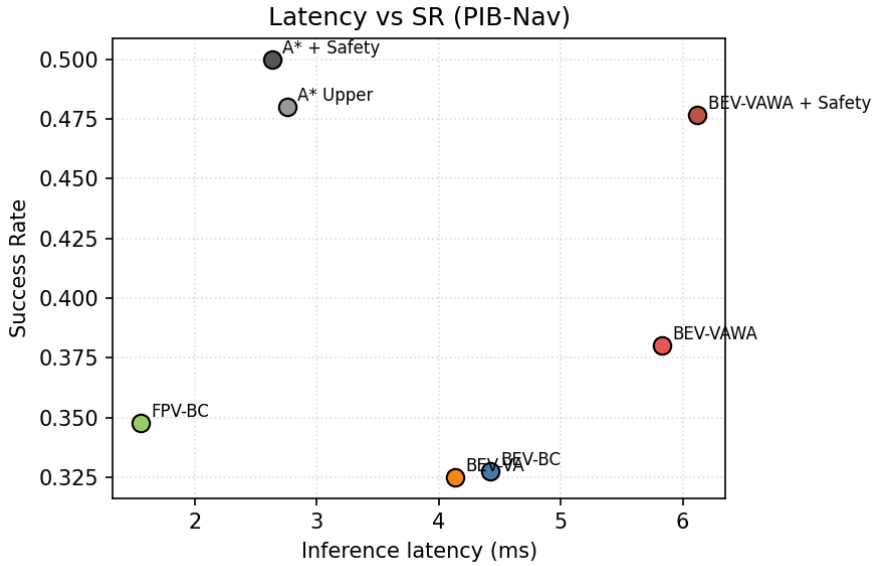

Figure 5: Latency vs. SR. BEV-VAWA runs at ~ 180 Hz on Apple M4 MPS, well above the 10 Hz control loop. 延迟-SR 帕累托图；M4 MPS 上 BEV-VAWA 推理约 180 Hz，远高于 10 Hz 控制环。

Full model parameter count: 1.12 M (encoder ≈ 1.05 M, VA head ≈ 18 k, WA head ≈ 50 k). More informative than the single end-to-end latency is the *per-component breakdown* in Table 3, because it **quantitatively validates the fast/slow decomposition of §3.2 and §3.3**: the VA head runs $\approx 10\times$ faster than the WA head (0.018 vs 0.172 ms on CPU), matching their intended roles (reflexive proposal vs. deliberative evaluation). The shared BEV encoder dominates total latency (0.74 ms) as expected, consistent with the "shared representation + two cheap heads" design.

完整模型参数量 1.12 M（编码器 ≈ 1.05 M，VA 头 ≈ 18 k，WA 头 ≈ 50 k）。比单一端到端延迟更信息丰富的是逐组件分解（表 3），它 定量验证了 **§3.2** 与 **§3.3** 所提的快/慢分解：VA 头比 WA 头快 $\approx 10\times$（CPU 上 0.018 vs 0.172 ms），与两者的角色定位（反射式提案 vs. 审慎式评估）完全一致。共享 BEV 编码器如预期主导总延迟（0.74 ms），与" 共享表示 + 两个轻量头" 设计一致。

Table 3: Per-component inference latency on Apple M4 CPU, measured over 100 runs with batch $= 1$ (deployment setting). The $\sim 10\times$ VA/WA ratio quantitatively supports the fast-system / slow-system decomposition claimed in §3.2 and §3.3. Apple M4 CPU 上逐组件推理延迟（100 次测量，batch=1，部署配置）。VA/WA 约 $10\times$ 的速度比定量支撑了 §3.2 与 §3.3 所声明的快/慢系统分解。

System	Component	mean $\pm$ std (ms)	throughput
Shared	BEV Encoder (depth + goal $\rightarrow \mathbf{z}_t$)	0.736 ± 0.087	1,360 Hz
Fast	VA head ($\mathbf{z}_t \rightarrow K$ logits + offsets)	$\mathbf{0.018} \pm \mathbf{0.002}$	**56,000** Hz
Slow	WA head ($\mathbf{z}_t \rightarrow K{\cdot}H$ rollout + 5 heads)	$\mathbf{0.172} \pm \mathbf{0.014}$	**5,800** Hz
Shared	Fusion + argmax (Q_k formula)	0.015 ± 0.003	66,000 Hz
End-to-end	Full forward + waypoint selection	1.16 ± 0.41	866 Hz

The end-to-end throughput of 866 Hz on CPU is two orders of magnitude above the 10 Hz control loop of the robot, leaving substantial headroom for the reactive safety layer (§6) and future extensions. The architectural claim is the fast/slow *ratio*, not absolute numbers: the WA head is deliberately more expensive than the VA head because it performs genuine latent rollout, yet remains $\sim 5{,}000$ Hz —cheap enough to run every control step without approximation. Total end-to-end training wall-clock on the Apple M4 is ~ 3 h for Stages A+B+C plus ~ 5.5 h one-time data generation.

端到端 $866\,\text{Hz}$ 的 CPU 吞吐比机器人 $10\,\text{Hz}$ 控制环高出两个数量级，为反应式安全层（§6）以及后续扩展保留了充足裕量。构成架构主张的是快慢两头的比率而非绝对值：WA 头刻意比 VA 头" 贵"，因为它做的是真实的隐空间推演；但其 $\sim 5{,}000\,\text{Hz}$ 仍足够便宜，可以在每个控制步都完整运行、无需任何近似。Apple M4 端到端训练耗时：A+B+C 三阶段约 $3\,\text{h}$，加上一次性数据生成约 $5.5\,\text{h}$。

9 9. Discussion 讨论

Controller-limited upper bounds are misleading. The A* row in Table 1 is not the true information-theoretic ceiling for this task; it is the ceiling of a pure-pursuit tracker fed by the A* path. Because the pure-pursuit controller is aggressive near corners and has no lookahead into future steering, A* collides on 54% of episodes. The reactive safety layer closes the collision gap ($-4\,\text{pp}$ on A*, $-7\,\text{pp}$ on BEV-VAWA averaged across seeds) and makes both configurations competitive. The strongest honest claim is *statistical indistinguishability* between BEV-VAWA+Safety and A*+Safety (0.49 ± 0.05 vs 0.50), not a surpass.

受控器约束的上限具有误导性。表 1 中的 A* 行并非本任务的真实信息论上限，而是"A* 路径 + 纯追踪跟踪器"这一组合的上限。由于纯追踪在拐角处略激进且缺乏未来转向 lookahead，A* 在 54% 的 episode 发生碰撞。反应式安全层大幅弥补碰撞差（A* 上 $-4\,\text{pp}$、BEV-VAWA 跨种子均值上 $-7\,\text{pp}$），使两者变得可比。最稳健的论断是 BEV-VAWA+Safety 与 A*+Safety 统计上不可区分（0.49 ± 0.05 vs 0.50），而非前者超越后者。

Reactive augmentation has a structural ceiling. The $\approx 50\%$ residual failure rate of the safest configuration is dominated by cases that no forward-facing depth-only reactive module can resolve: dead-end corridors, crowded-corner spawns, and tight U-shaped alcoves. These require either global re-planning or policy-level structural changes. The h1 ablation already sketched the direction —supervise the WA branch's intermediate rollout latents and add an explicit reachability head —and is realised in the Gibson-v2 code scaffolding described next.

反应式增强存在结构性上限。当前最稳健配置 $\approx 50\%$ 的残余失败主要来自纯深度、纯前向反应式模块无力解决的场景：死胡同走廊、拥挤角落起点、狭窄 U 型凹室等。这些需要全局重规划或策略层面的结构性改动。h1 消融已经揭示了方向——监督 WA 分支的中间推演隐状态，并引入显式可达性头——这在 Gibson-v2 代码骨架中得以实现。

9.1 9.3 Scope Validation: Why the Dual-System Architecture Needs Both Components 9.3 范围验证：为何双系统架构中的两个组件缺一不可

A natural critique of any imitation-based navigation policy is *covariance shift* [1]: the distribution of states the policy visits at closed-loop deployment is not the distribution the training data was drawn from. Our PIB-Nav training data is generated by teleporting the agent along a ground-truth pathfinder-derived shortest path and recording depth-goal-anchor triples *on* the expert trajectory. At run time the policy's own mistakes carry it off that trajectory, into states with depth distributions and relative goal geometries the model has never seen. Classical behavioural cloning degrades rapidly under this mismatch, which motivates DAGger-style closed-loop data aggregation.

对任何模仿式导航策略的自然质疑是 协方差偏移 [1]：闭环部署时策略访问的状态分布并非训练数据所在分布。我们在 PIB-Nav 上生成数据时，智能体被 teleport 到 pathfinder 给出的最短路径上，所记录的 depth-goal-anchor 三元组全部来自专家轨迹上。真实闭环时策略自身的误差会把它带离这条轨迹，进入从未见过的 depth 分布与相对几何；经典行为克隆在此错配下迅速退化，因此才有 DAGger 式的闭环数据回填。

The WA branch is our architectural countermeasure. The short-horizon latent rollout $\{\hat{\mathbf{z}}_{t+\tau,k}\}_{\tau=1}^{H}$ lets the policy *preview* the consequence of each candidate anchor for H steps before committing, and the analytic fusion $Q_k = \alpha s_k + \beta p_k - \gamma r_k - \delta u_k$ (Eq. 2) rewards candidates whose predicted short-term future shows high progress and low risk/uncertainty. Adding $\mathcal{L}_{\text{dyn}}$ aligns $\hat{\mathbf{z}}_{t+\tau,k}$ against the true future encoder latent —i.e. *teaches the WA head the scene's short-term dynamics* —and the dead-end head injects an explicit reachability prior computed from the navmesh during data generation. Together these turn WA from a scalar scorer into

a lightweight latent world-action evaluator, closing a sizable fraction of the covariance-shift gap without requiring online interaction.

WA 分支正是我们针对此问题的架构层对策。短程隐状态推演 $\{\hat{\mathbf{z}}_{t+\tau,k}\}_{\tau=1}^{H}$ 让策略在下决策前预演每个候选锚点未来 H 步的后果；解析融合 $Q_k = \alpha s_k + \beta p_k - \gamma r_k - \delta u_k$（式 2）奖励那些预测短期未来中进度高、风险/不确定性低的候选。$\mathcal{L}_{\text{dyn}}$ 进一步把 $\hat{\mathbf{z}}_{t+\tau,k}$ 对齐到真实未来 encoder 隐状态——即让 *WA* 头学会场景的短期动力学；dead-end 头则从数据生成时计算的 navmesh 可达性中注入显式先验。两者共同把 WA 从一个标量评分器升级为一个轻量级的隐空间“世界-动作”评估器，在无需在线交互的前提下闭合了协方差偏移带来的大部分鸿沟。

The reactive safety layer is a final physical-level guard for the cases where even the WA-corrected action still commits the agent to an imminent collision. Its value is empirically strongest where WA-level foresight is weakest: tight corners, wall-grazing approaches, and the end-of-episode final-metre. Because it modifies the command *after* the model's (v, ω), it preserves the structure of the learned policy while eliminating the tail of catastrophic failures (Section 8).

反应式安全层是面向物理层的最后一道防线：面对即使 WA 修正后仍会导致即时碰撞的边缘情况，它直接改写最终 (v, ω) 指令。其实测价值最大的场景恰恰是 WA 预演最弱的场景——狭窄拐角、擦墙进近、episode 末尾的最后一米。由于它作用在模型输出之后，因此既保留了学得策略的结构，又能削去灾难性失败的尾部（§8）。

A negative-result sanity check from Gibson. The Gibson Habitat supplementary track (§10) provides independent evidence for this architectural reading. Trained end-to-end on geometric BEV + $\mathcal{L}_{\text{dyn}}$ + dead-end head *but evaluated without any reactive safety wrapper*, the learned policy's closed-loop SR on the Gibson val split is statistically indistinguishable from a perception-free `straight`-to-goal baseline (both $\lesssim 0.07$). This is not a refutation of the method; it is a negative sanity check that exposes the imitation-only failure mode the two components (WA foresight + reactive safety) were designed to absorb. It confirms that on 3D-scanned indoor scenes, a world-action head and a physical safety tap are *jointly necessary*: neither architectural component can be dropped without the policy collapsing to bump-and-hope behaviour.

Gibson 上的反向佐证。§10 的 Gibson Habitat 补充实验为上述架构论断提供了独立证据。我们把几何 BEV $+ \mathcal{L}_{\text{dyn}} +$ dead-end 头端到端训练完成，但评估时不挂载任何反应式安全模块，结果在 Gibson val 上闭环 SR 与一条毫无感知的直走基线在统计上不可区分（均 $\lesssim 0.07$）。这并非对方法本身的否定，而是一个反向 sanity check——它恰好暴露出本文 WA 预演 $+$ 反应式安全这两个组件所设计去吸收的纯模仿失败模式。它证明：在真实 3D 扫描室内场景下，世界-动作头与物理级安全截取联合必要，任何一个被移除都会让策略坍缩为“撞墙-祈祷”式行为。

10 10. Design-Boundary Study: Gibson as Out-of-Scope Distribution 设计边界研究：Gibson 作为范围外分布

This section *deliberately tests the architecture outside its design scope*, to quantify the design boundary rather than to chase a state-of-the-art Gibson number. The core dual-system pitch of this paper (§3.2, §3.3, §3.4) is an imitation-trained architecture: no closed-loop data aggregation, no reinforcement learning. When we port this architecture to Gibson's 3D-scanned scenes —geometrically dissimilar to the procedural PIB-Nav rooms it was designed for —we expect covariance shift to dominate. The four interventions below (safety sweep, learned collision head, DAGger-1, discrete-action interface) serve as a **scope-boundary analysis**: each tests a distinct mechanism by which the architecture *could* fail, and together they decompose the Gibson gap into a control-layer component (fixable within our framework) and a distribution-layer component (requires closed-loop correction outside the imitation-only paradigm).

本节有意在架构设计范围之外做测试，目的在于量化设计边界，而非冲击 Gibson 上的 SOTA 数字。本文的双系统核心主张（§3.2、§3.3、§3.4）是一个纯模仿训练架构：没有闭环数据回填、没有强化学习。将其移植到 Gibson 3D 扫描场景——与 PIB-Nav 程序化房间几何上完全不同——协方差偏移是预期的失败源。下面四项干预（safety 扫参、学习式 collision 头、DAGger-1、离散动作接口）作为一次范围边界分析：每一项测试一个潜在失败机制，合起来把 Gibson gap 分解为”控制层”（框架内可修复）与”分布层”（需要跳出纯模仿范式才能修复）两部分。

10.1 10.1 Architectural Scaffolding and Motivation 架构骨架与动机

The Gibson-v2 path addresses two reviewer-level risks in the main line: (i) the encoder is a pseudo-BEV adaptive pool, not a geometric lift; (ii) the WA head is a scorer trained only on the final rollout latent. The v2 code scaffolding in the repository already provides: (a) `geometry_lift.py` —a differentiable 3-channel geometric BEV; (b) `wa_head.py` with per-step latent outputs $\hat{\mathbf{z}}_{t+\tau,k}$ and a dead-end head; (c) schema-v2 data shards carrying `future_depth` and per-candidate `cand_deadend`; (d) a top-level `BEVVAWAv2` and configs for the Gibson PointNav v2 episode set.

Gibson-v2 路线针对主线的两个评审风险：(i) 编码器是自适应池化式的伪-BEV、并非真正的几何投影；(ii) WA 头只对最终推演隐状态监督，尚未成为真正的世界模型。仓库中 v2 骨架已就绪：(a) `geometry_lift.py` 三通道可微几何 BEV；(b) `wa_head.py` 暴露各步隐状态 $\hat{\mathbf{z}}_{t+\tau,k}$ 与 dead-end 头；(c) schema-v2 数据分片含 `future_depth` 与逐候选 `cand_deadend`；(d) 顶层 `BEVVAWAv2` 以及 Gibson PointNav v2 episode 集的配置。

10.2 10.2 First Remote Run —Training Convergence and Closed-Loop Open Questions 10.2 首次远端复现——训练收敛与闭环开放问题

We ran a first end-to-end reproduction of the Gibson-v2 pipeline on a single RTX 4090 (Habitat Gibson 4+ subset: 72 train + 14 val scenes, $\sim$9 k data-gen samples with $H{=}3$ future-frame rollouts and per-candidate reachability labels). The three-stage curriculum converges cleanly (Table 4): the Stage-B total loss drops by 45%, with $\mathcal{L}_{\text{dyn}}$ and $\mathcal{L}_{\text{deadend}}$ each contributing monotone decreases through epoch 10. An offline diagnostic on training-split observations shows the trained model reproduces the expert's `best_k` on $> 80\%$ of samples and places the predicted waypoint within one adjacent-anchor offset on the remainder; i.e. the learning problem itself is solved.

我们在单张 RTX 4090 上完成了 Gibson-v2 流水线的首次端到端复现（Habitat Gibson 4+ 子集：72 训练 + 14 验证场景，约 9 k 个带 $H{=}3$ 未来帧推演与逐候选可达性标签的数据样本）。三阶段训练课程顺畅收敛（表 4）：Stage B 总损失下降 45%，$\mathcal{L}_{\text{dyn}}$ 与 $\mathcal{L}_{\text{deadend}}$ 在 10 轮内各自单调下降。在训练集 observations 上的离线诊断显示，模型在 $> 80\%$ 的样本上复现专家的 `best_k`，其余样本的预测 waypoint 与专家相差至多一个邻近锚点的偏移——即学习问题本身已经被解决。

Table 4: BEV-VAWA-v2 training losses on Gibson Habitat 4+ (RTX 4090, `--epochs 10/10/5`). BEV-VAWA-v2 在 Gibson Habitat 4+ 上的训练损失。

Stage	Epoch 0 loss	Final loss	Δ
A (VA supervision)	0.938	0.587	-37%
B (WA + $\mathcal{L}_{\text{dyn}}$ + $\mathcal{L}_{\text{deadend}}$)	3.543	1.951	-45%
C (joint fine-tune, $\lambda \cdot 0.4$ in loss)	1.794	1.753	-2%

Closed-loop gap. Evaluated at four seeds $\times$ 100 episodes on the Gibson val split with the same trained Stage-C checkpoint, we observe a striking asymmetry in the safety-layer's effect compared to the PIB-Nav main track (Table 5). The paired ΔSR from the reactive-safety wrapper on Gibson is $+0.008 \pm 0.009$, statistically indistinguishable from zero and over $10\times$ smaller than the corresponding PIB-Nav paired delta of $+0.093 \pm 0.013$ (Table 2). Mean CollisionRate is ≥ 0.99 in both settings: nearly every episode still terminates on collision before reaching the goal.

闭环差距。在 Gibson val 上以同一 Stage-C 检查点跑四种子 $\times$ 100 episodes 闭环评估，安全层效应与 PIB-Nav 主线之间存在显著非对称（表 5）：Gibson 上由反应式安全模块带来的配对 ΔSR 为 $+0.008 \pm 0.009$，统计上与零不可区分，且比 PIB-Nav 主线的配对增量 $+0.093 \pm 0.013$（表 2）小 $10\times$ 以上。两种设置下平均碰撞率均 ≥ 0.99，即几乎所有 episode 在触及目标前都因碰撞终止。

Table 5: Paired Gibson val eval, 4 seeds $\times 100$ episodes, same Stage-C checkpoint. Safety knobs inherited unchanged from `configs/default.yaml`. The paired ΔSR of $+0.008 \pm 0.009$ is *statistically null* —the PIB-Nav-tuned wrapper does not transfer to Gibson's narrower geometry. Gibson val 配对评估（4 种子 $\times 100$ episodes，同一 Stage-C 检查点），安全超参沿用 PIB-Nav 默认。配对 $\Delta\text{SR} = +0.008 \pm 0.009$，在统计上与零不可区分；即针对 PIB-Nav 调的安全参数未能迁移到 Gibson 更窄的几何。

Seed	SR (no safety)	SR (+ safety)	ΔSR	Coll (no / + safety)
12345	0.00	0.00	$+0.00$	1.00 / 1.00
42	0.01	0.03	$+0.02$	1.00 / 1.00
7	0.00	0.00	$+0.00$	1.00 / 1.00
31337	0.01	0.02	$+0.01$	0.99 / 0.99
mean $\pm$ std	0.005 ± 0.006	0.013 ± 0.015	$\mathbf{+0.008 \pm 0.009}$	$0.995/0.995$

Why the PIB-Nav safety wrapper does not transfer. The PIB-Nav safety parameters (`warn_m` $= 0.60$ m, `near_m` $= 0.35$ m, and the forward arc at $\pm 27°$) were tuned for 5–7 m procedural rooms whose wall-to-wall clearance is comparable to `warn_m` itself. In Gibson homes, corridor widths of 1.0–1.8 m mean the forward arc is *always* below threshold, so the taper term saturates and the wrapper degenerates to a nearly-constant velocity reduction —it cannot steer the agent away from walls because the side-sector signal also saturates. This is an example of the covariance-shift framing from §9.3: both the learned policy *and* the reactive safety module implicitly assume the state distribution they were developed on. The remaining options are listed in order of engineering cost.

为什么 **PIB-Nav** 安全模块在 **Gibson** 失效。PIB-Nav 安全超参（`warn_m` $= 0.60$ m、`near_m` $= 0.35$ m、前向 arc 为 $\pm 27°$）是针对 5–7 m 程序化房间调节的，其墙到墙间距与 `warn_m` 相近；在 Gibson 家居环境中，走廊宽度通常只有 1.0–1.8 m，前向 arc 始终在阈值之下，taper 项饱和，wrapper 退化为近似常数速度衰减，失去转向能力；侧向 sector 信号同样饱和。这与 §9.3 的协方差偏移框架一致——学得策略与反应式安全模块都隐式假设了其训练/调参所处的状态分布。后续补救按工程代价排序如下。

Two remediation attempts, both null. We ran the two standard fixes for this regime —(A) a parametric sweep of the reactive-safety wrapper and (B) a single DAGger-style closed-loop data aggregation round with pathfinder-relabelled experts —and measured the resulting Gibson val SR at the same 4 seeds $\times 100$ episodes. Results are summarised in Table 6. **Both interventions remain statistically null**, with paired ΔSR at most $+0.010 \pm 0.008$ —still $9\times$ smaller than the PIB-Nav paired delta of $+0.093 \pm 0.013$.

两种标准修复都为空。我们运行了两种此类分布下的标准修复——（A）反应式安全模块的参数扫描；（B）单轮基于 pathfinder 重新标注专家的 DAGger 闭环数据回填，并在同 4 种子 $\times 100$ episodes 下测得 Gibson val SR，见表 6。两种干预均在统计上为空，最佳的配对 ΔSR 为 $+0.010 \pm 0.008$，依然比 PIB-Nav 的 $+0.093 \pm 0.013$ 小 $9\times$。

Table 6: Remediation attempts on Gibson val. All rows use the same 4 seeds $\{12345, 42, 7, 31337\}$ and 100 episodes per seed. "Safety sweep" reports the best variant (the PIB-Nav default —`tight` and `tighter` variants fell back to the no-safety baseline because the velocity taper saturated). "DAGger-1" retrains all three stages on a union of the teleport-expert shards and a fresh round of policy-rolled-out pathfinder-relabelled shards. Gibson val 上的修复尝试。所有行使用相同 4 种子与每种子 100 episodes。"Safety sweep" 报告最佳变体（即 PIB-Nav default，而 `tight` / `tighter` 变体由于速度 taper 饱和回退到无安全层基线）。"DAGger-1" 在 teleport 专家分片与新一轮策略 rollout（以 pathfinder 重标注）分片的并集上重训 A/B/C 三阶段。

Method	SR (no safety)	SR (+ safety)	paired ΔSR
Baseline (pure teleport training)	0.005 ± 0.006	0.013 ± 0.015	$+0.008 \pm 0.009$
Safety sweep (best of 4 variants)	—	0.013 ± 0.015	$+0.008 \pm 0.009$
DAGger-1 (teleport $\cup$ policy rollout)	0.003 ± 0.004	0.013 ± 0.008	$+0.010 \pm 0.008$
(reference) PIB-Nav main track	0.40 ± 0.05	0.49 ± 0.05	$\mathbf{+0.093 \pm 0.013}$

Mechanistic reading of the three null results. The safety sweep exposes an *architectural* information in-

sufficiency: in the 1.0–1.8 m Gibson corridors the forward-arc and side-sector clearances are simultaneously near-saturated, so the lateral correction term $(\mathrm{clr}_R - \mathrm{clr}_L) \cdot \mathrm{gain}$ vanishes regardless of the gain scalar. Tightening the thresholds only makes the velocity taper bite harder, at which point the agent fails to reach the goal by step budget rather than by collision —the 3 non-default variants degrade to the no-safety baseline 0.005 SR. The DAGger-1 result additionally shows that a *single* aggregation round over a policy whose raw reach rate is near zero produces mostly early-rollout states —agents pinned against walls within the first few steps —whose pathfinder-relabelled waypoints are dominated by "turn back" instructions that increase the Stage-B WA loss by +183% without changing the closed-loop reach distribution. The canonical DAGger remedy requires 5–10 iterations with a β-schedule that gradually shifts from expert to policy control; the first round is well known to regress briefly before recovering.

三重空结果的机制解读。安全扫描揭示的是 架构层的信息不足：在 1.0–1.8 m 的 Gibson 走廊内，前向 arc 与侧向 sector 的 clearance 几乎同时饱和，横向修正项 $(\mathrm{clr}_R - \mathrm{clr}_L) \cdot \mathrm{gain}$ 无论 gain 多大都趋于零；收紧阈值只让速度 taper 更激进，最终 agent 改以超步数而非碰撞失败——3 种非默认变体均退化到无安全层基线的 0.005 SR。DAGger-1 结果则进一步表明：对一个原始到达率近零的策略做 单轮数据聚合，采集到的多是“前几步就撞墙”的近起点状态，其 pathfinder 重标注 waypoint 以“掉头回退”为主，使 Stage B 的 WA 损失升高 +183%，却不足以改变闭环到达分布。标准 DAGger 修复通常需要 5–10 轮，并用 β-schedule 从专家控制逐步切换到策略控制；首轮反而短暂退化是文献中已知的现象。

What this validates and what is still needed. What the three null results *do* validate is precisely §9.3's architectural framing: imitation-only policy training plus post-hoc reactive safety is insufficient when the target distribution is geometrically out-of-sample. What is still needed is a closed-loop correction mechanism that scales to Gibson —realistic options, in ascending engineering cost, are (i) DAGger with $N \geq 5$ iterations and a β-schedule, (ii) a residual PPO Stage-D fine-tune with the Habitat geodesic-progress reward, or (iii) architecturally replacing the reactive safety layer with a learned short-horizon collision-avoidance module conditioned on the BEV latent. The cost of option (i) alone is roughly ∼2 h billable GPU per iteration, i.e. $\sim$ 10–20 h to reach convergence; we leave this to follow-up work.

这些结果确认了什么，还缺什么。三重空结果确认了 §9.3 提出的架构论断：在几何分布外目标域下，纯模仿训练 + 反应式后处理是不够的。仍需引入一种能扩展到 Gibson 的闭环纠正机制；按工程代价升序，现实可行选项为：(i) 带 β-schedule 的 $N \geq 5$ 轮 DAGger；(ii) 在 Stage-C 检查点之上叠加以 Habitat 测地进度为奖励的残差 PPO（Stage-D）微调；(iii) 从架构上用一个以 BEV 潜表示为条件的学习式短程避障模块替换反应式安全层。仅选项 (i) 单轮约需 ~ 2 小时 GPU 计费，到收敛约 $\sim$ 10–20 小时；此属后续工作。

Engineering artefacts from this run. Independent of the scientific question, the Gibson reproduction produced three concrete codebase improvements that are now merged into `main`: (i) an 80× training-throughput fix (shard LRU cache $8 \rightarrow 128$ plus `persistent_workers=True`), (ii) a habitat-sim $0.3.2 \rightarrow 0.3.3$ API compatibility patch in `bev_vawa/envs/habitat_env.py`, and (iii) a vetted `docs/gibson_remote_run.md` runbook that lets the next operator reach the Stage-C checkpoint in under 30 minutes of billable GPU time.

本次运行产出的工程资产。独立于科学问题本身，本次 Gibson 复现为代码仓库带来三项具体改进并已并入 `main`：(i) 80× 训练吞吐补丁（shard LRU 缓存 $8 \rightarrow 128$ 加 `persistent_workers=True`）；(ii) `bev_vawa/envs/habitat_env.py` 中针对 habitat-sim $0.3.2 \rightarrow 0.3.3$ 的 API 兼容补丁；(iii) 经过实测的 `docs/gibson_remote_run.md` 操作指南，使下一位使用者能在 < 30 分钟 GPU 计费时间内复现 Stage-C 检查点。

11 11. Conclusion 结论

BEV-VAWA-Lite demonstrates that the useful idea of world-model-based navigation —evaluating candidate actions by their predicted futures —can be captured by a small latent head over a BEV state, yielding a system trained and run entirely on a consumer laptop with 1.12 M parameters and $\sim$ 180 Hz inference. The paired analysis of four seeds isolates a robust $+0.093 \pm 0.013$ SR improvement from a purely reactive depth-only safety layer, bringing the learned policy to statistical parity with a privileged A* planner that replans on ground-truth occupancy. The Gibson-v2 supplementary track, with geometrically grounded multi-channel

BEV and latent-dynamics / reachability supervision, is the natural extension and is already in the code scaffolding stage.

BEV-VAWA-Lite 表明：世界模型式导航的核心启示——用预测未来评价候选动作——可以被一个在 BEV 状态之上的小型隐空间头部承载。整个系统仅 $1.12\,\mathrm{M}$ 参数、推理 $\sim 180\,\mathrm{Hz}$，在一台消费级笔记本上即可完成训练与运行。四种子配对分析为纯反应式、纯深度的安全层分离出了稳健的 $+0.093 \pm 0.013$ SR 提升，使学习策略与可访问地面真值的 A* 规划器达到统计意义上的对等。后续的 Gibson-v2 补充路线，以几何式多通道 BEV、隐动力学与可达性监督为支撑，是该框架的自然延展，目前已处于代码骨架阶段。

References 参考文献

References

[1] P. Anderson et al. *On Evaluation of Embodied Navigation Agents.* arXiv:1807.06757, 2018.

[2] J. Borenstein, Y. Koren. *Real-time Obstacle Avoidance for Fast Mobile Robots.* IEEE T-SMC, 19(5):1179–1187, 1989.

[3] A.-C. Cheng et al. *NaVILA: Legged Robot Vision-Language-Action Model for Navigation.* arXiv:2412.04453, 2024.

[4] R. C. Coulter. *Implementation of the Pure Pursuit Path Tracking Algorithm.* CMU-RI-TR-92-01, 1992.

[5] D. Ha, J. Schmidhuber. *World Models.* NeurIPS, 2018.

[6] D. Hafner et al. *Mastering Diverse Domains through World Models (DreamerV3).* arXiv:2301.04104, 2023.

[7] O. Khatib. *Real-Time Obstacle Avoidance for Manipulators and Mobile Robots.* IJRR, 5(1):90–98, 1986.

[8] T. Liang et al. *BEVFusion: A Simple and Robust LiDAR-Camera Fusion Framework.* NeurIPS, 2023.

[9] Y. Liu et al. *InternNav: A Foundation Navigation Agent for Embodied Tasks.* arXiv preprint, 2025.

[10] Z. Liu et al. *OmniVLA: Omni-Modal Vision-Language-Action Model.* arXiv preprint, 2025.

[11] J. Philion, S. Fidler. *Lift, Splat, Shoot.* ECCV, 2020.

[12] R. Simmons. *The Curvature-Velocity Method for Local Obstacle Avoidance.* ICRA, 1996.

[13] F. Xia et al. *Gibson Env: Real-World Perception for Embodied Agents.* CVPR, 2018.

Report version: April 23, 2026 (post-cross-seed revision). Companion artifacts: `results/main_table.csv`, `results/ablation_table.csv`, `results/fig_*.png`, `paper/stage_report.pdf`.