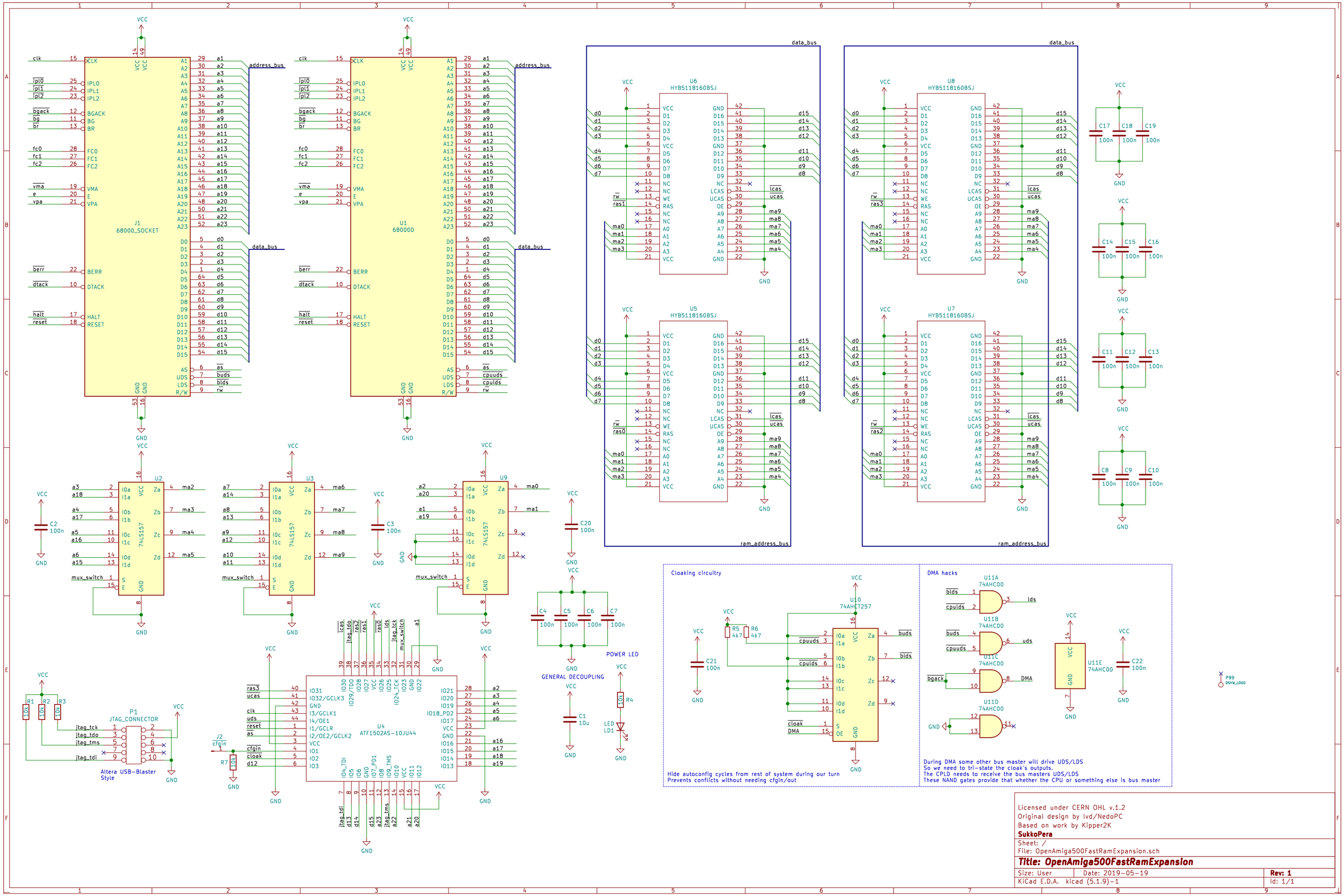

Licensed under CERN OHL v.1.2
Original design by lvd/NedoPC
Based on work by Kipper2K
SukkoPera

Sheet: /
File: OpenAmiga500FastRamExpansion.sch

Title: OpenAmiga500FastRamExpansion

Size: User	Date: 2019-05-19	Rev: 1
KiCad E.D.A. kicad (5.1.9)-1		Id: 1/1