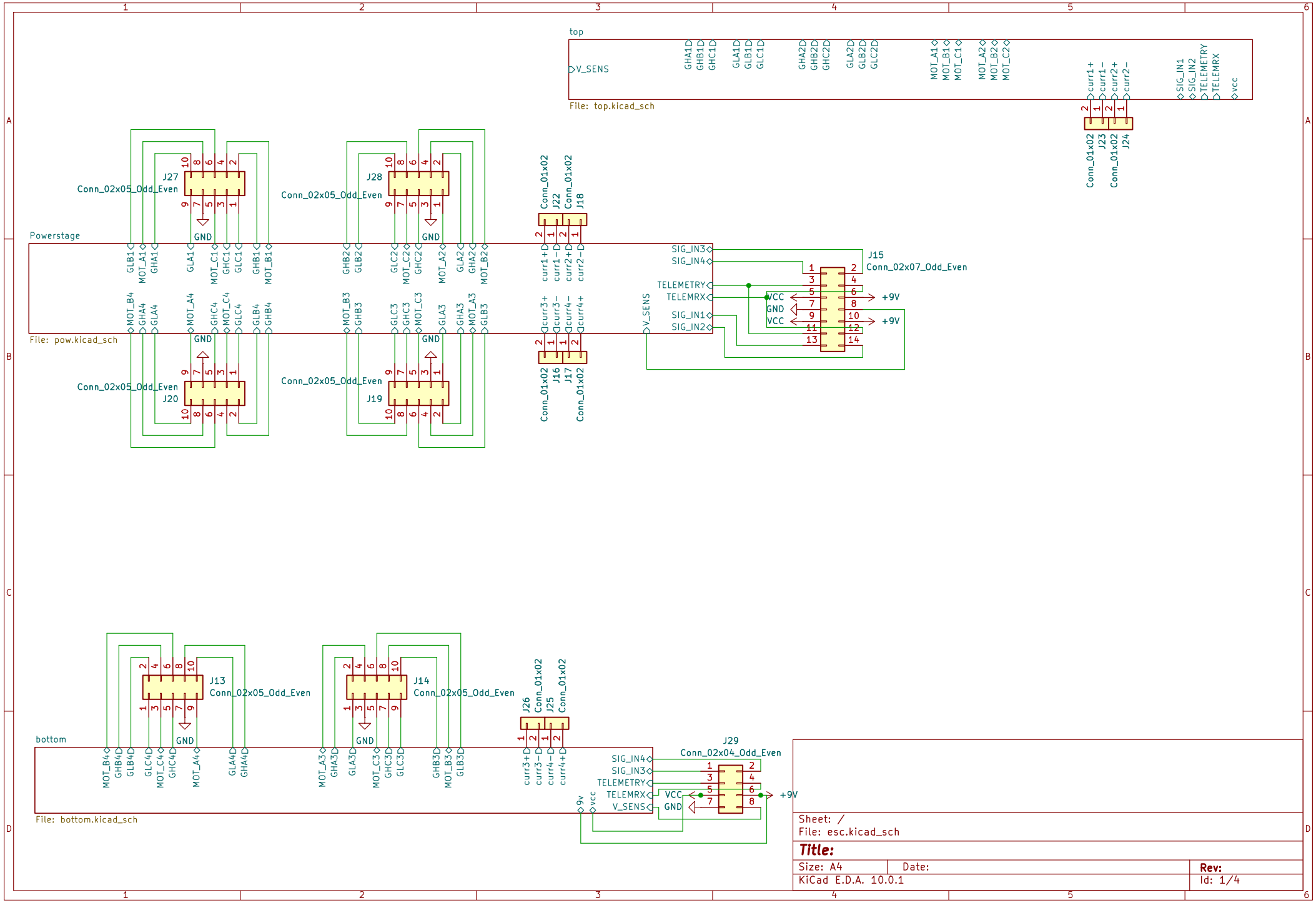
top
V_SENS
GHA1 GHB1 GHC1 GLA1 GLB1 GLC1 GHA2 GHB2 GHC2 GLA2 GLB2 GLC2
MOT_A1 MOT_B1 MOT_C1 MOT_A2 MOT_B2 MOT_C2
curr1+ curr1- curr2+ curr2-
SIG_IN1 SIG_IN2 TELEMETRY TELEMRX vcc
File: top.kicad_sch
Conn_01x02 J23
Conn_01x02 J24
Powerstage
File: pow.kicad_sch
Conn_02x05_Odd_Even J27
Conn_02x05_Odd_Even J28
Conn_02x05_Odd_Even J20
Conn_02x05_Odd_Even J19
GND
Conn_01x02 J22
Conn_01x02 J18
Conn_01x02 J16
Conn_01x02 J17
curr1+ curr1- curr2+ curr2-
curr3+ curr3- curr4- curr4+
SIG_IN3 SIG_IN4 TELEMETRY TELEMRX SIG_IN1 SIG_IN2 V_SENS
J15
Conn_02x07_Odd_Even
VCC GND VCC
+9V
+9V
bottom
File: bottom.kicad_sch
J13
Conn_02x05_Odd_Even
J14
Conn_02x05_Odd_Even
GND
Conn_01x02 J26
Conn_01x02 J25
curr3+ curr3- curr4- curr4+
J29
Conn_02x04_Odd_Even
SIG_IN4 SIG_IN3 TELEMETRY TELEMRX V_SENS
VCC GND
+9V
9v vcc
Sheet: /
File: esc.kicad_sch
Title:
Size: A4
Date:
Rev:
KiCad E.D.A. 10.0.1
Id: 1/4

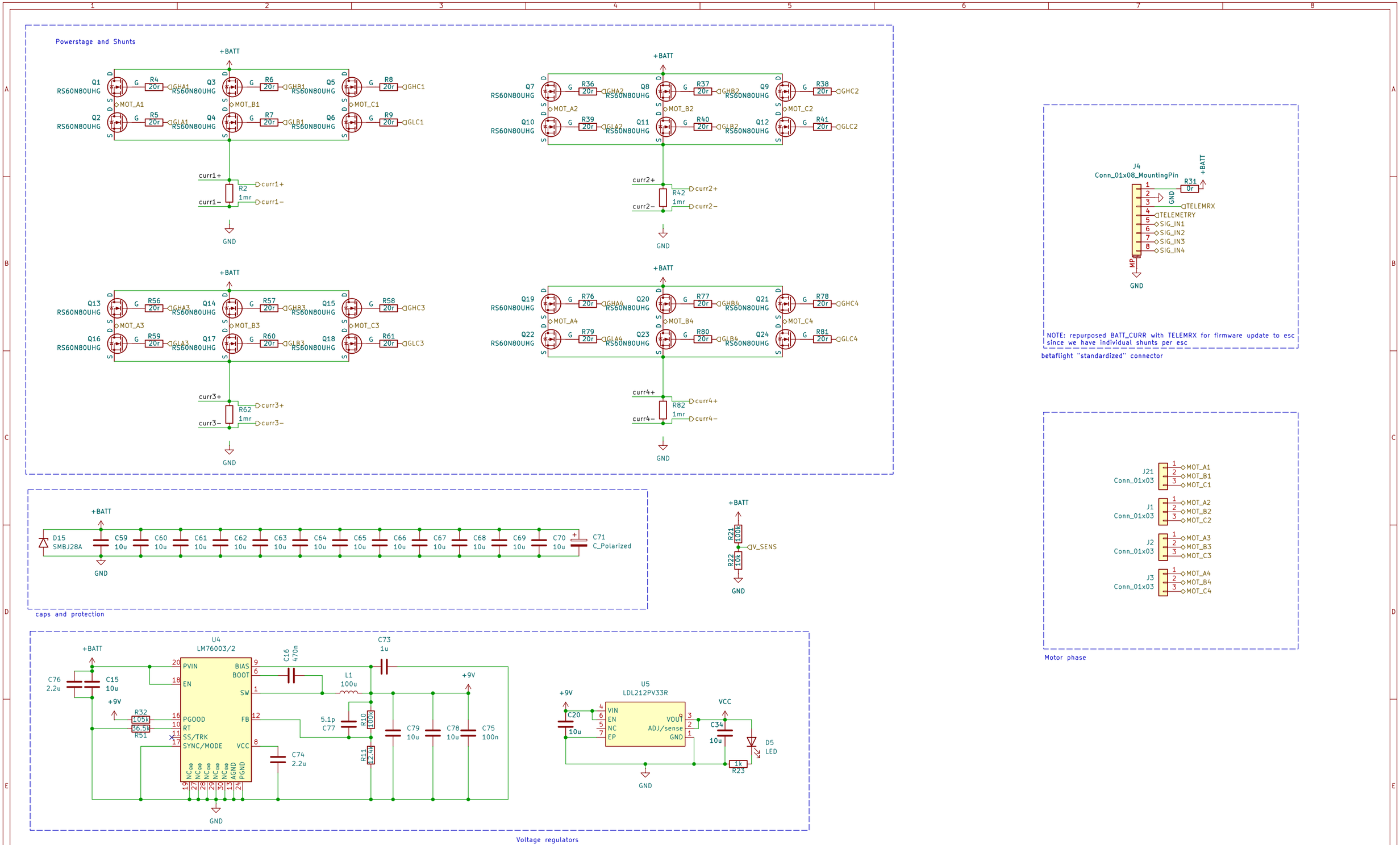

Sheet: /Powerstage/
File: pow.kicad_sch

Title:

Size: A3	Date:	Rev:
KiCad E.D.A. 10.0.1		Id: 2/4

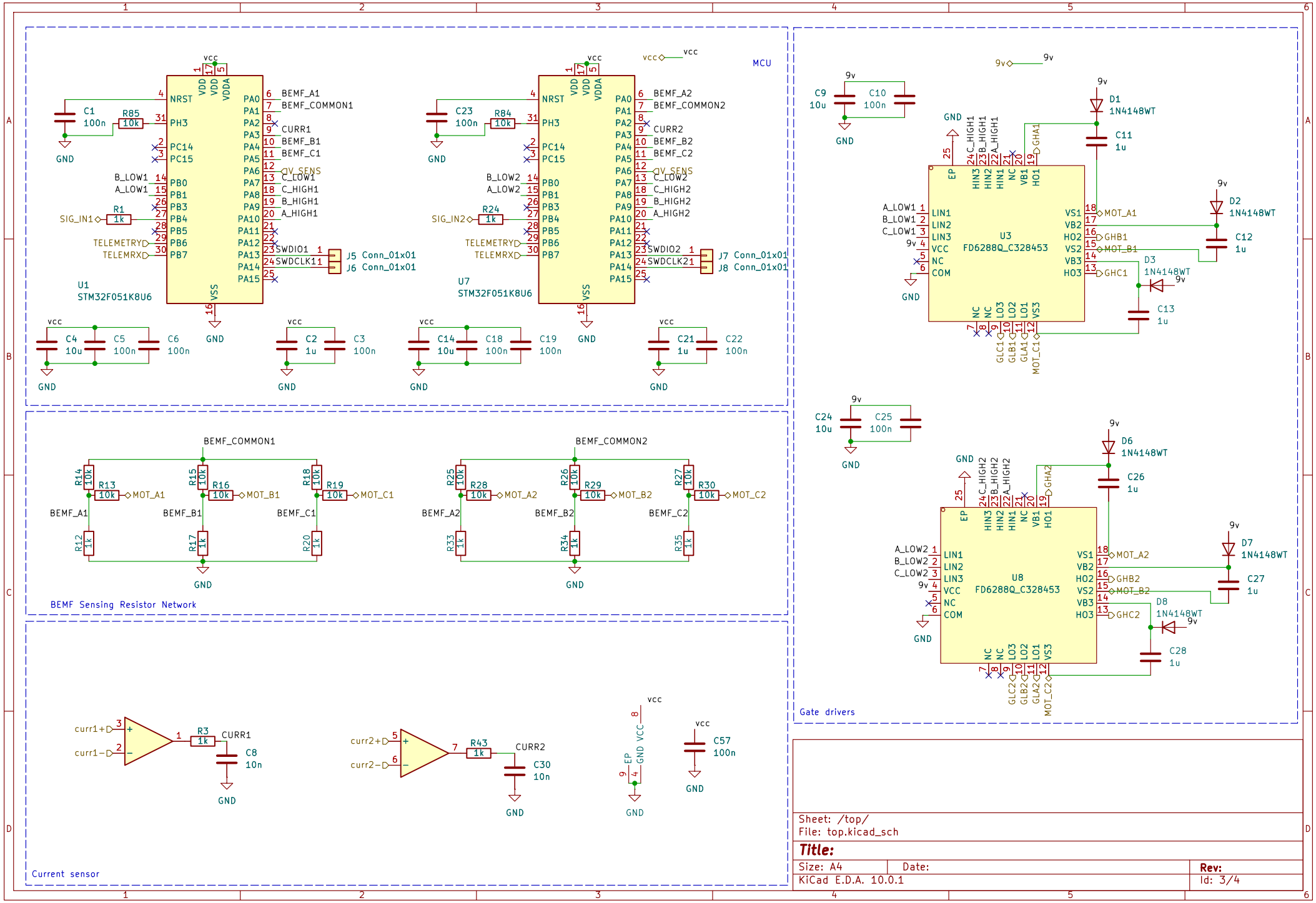
MCU
U1
STM32F051K8U6
U7
STM32F051K8U6
J5 Conn_01x01
J6 Conn_01x01
J7 Conn_01x01
J8 Conn_01x01
BEMF_COMMON1
BEMF_COMMON2
BEMF Sensing Resistor Network
U3
FD6288Q_C328453
U8
FD6288Q_C328453
Gate drivers
Current sensor
Sheet: /top/
File: top.kicad_sch
Title:
Size: A4
Date:
Rev:
KiCad E.D.A. 10.0.1
Id: 3/4

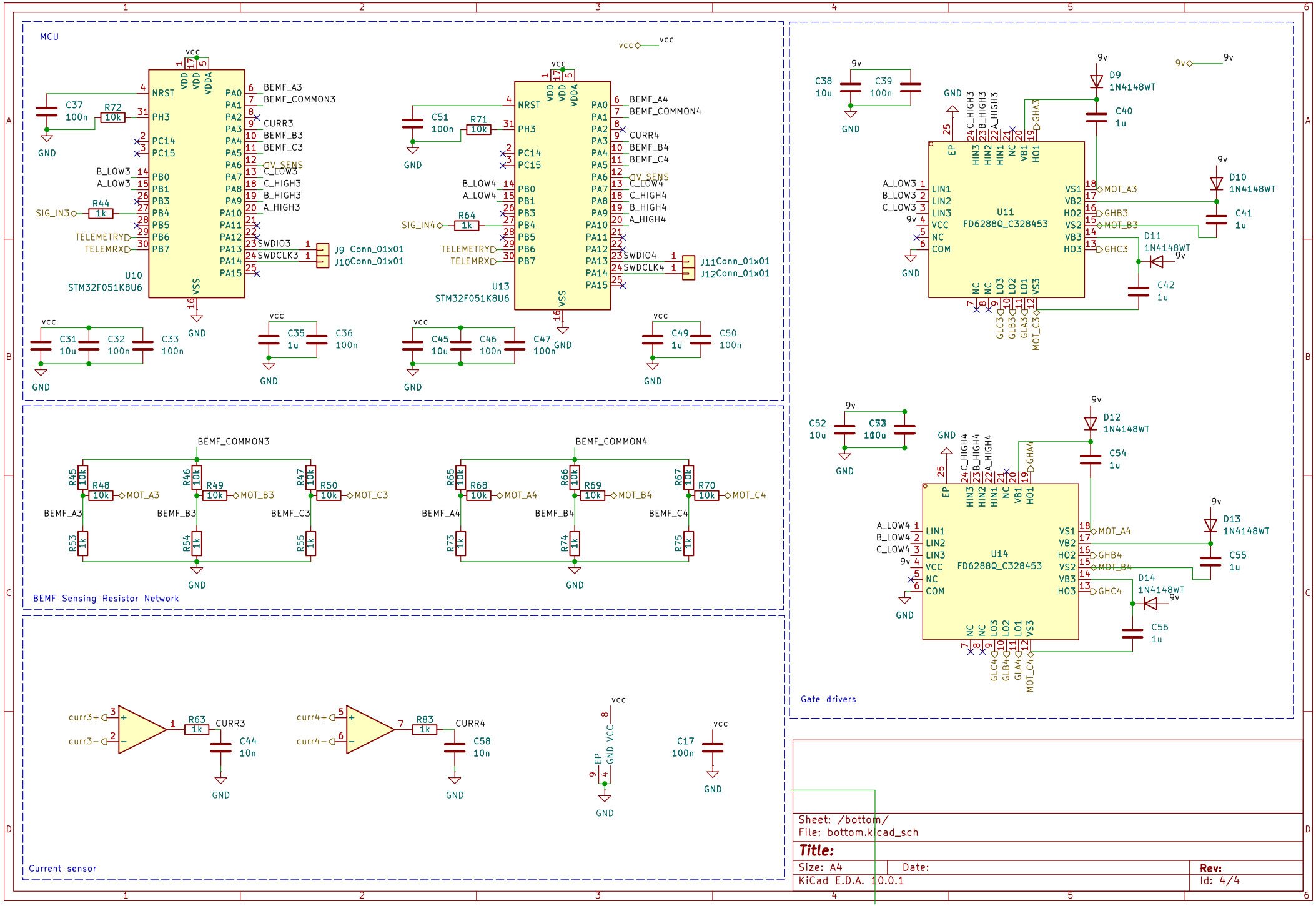
MCU
U10
STM32F051K8U6
U13
STM32F051K8U6
J9 Conn_01x01
J10Conn_01x01
J11Conn_01x01
J12Conn_01x01
BEMF Sensing Resistor Network
Current sensor
Gate drivers
U11
FD6288Q_C328453
U14
FD6288Q_C328453
D9 1N4148WT
D10 1N4148WT
D11 1N4148WT
D12 1N4148WT
D13 1N4148WT
D14 1N4148WT
Sheet: /bottom/
File: bottom.kicad_sch
Title:
Size: A4
Date:
Rev:
KiCad E.D.A. 10.0.1
Id: 4/4