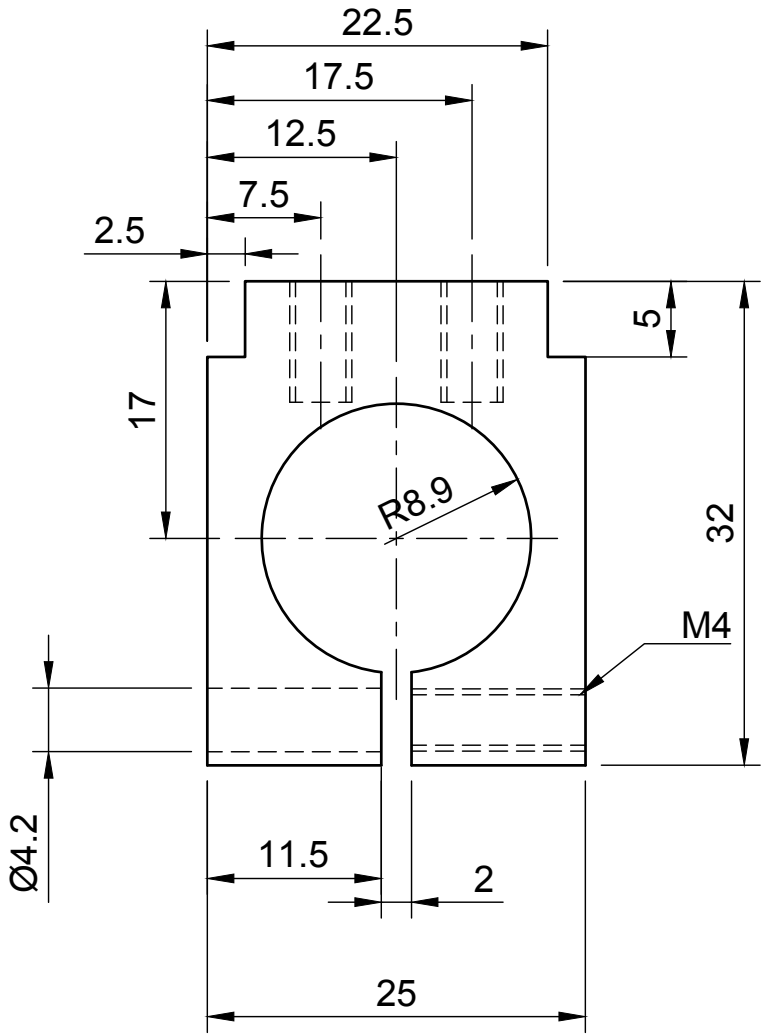

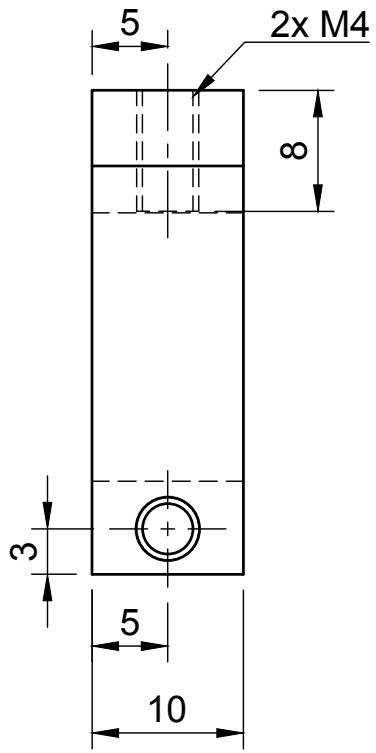

Dept.	Technical reference	Created by Laboratoire Jean Perrin	Approved by	
Scale: 2:1 Material: Aluminum alloy		Document type	Document status	
		Title Fiber Holder	DWG No.	
			Rev. / Date of issue	Sheet 1/1