Typerkennung: LTC ist HIGH für Code1, beim NA ist da LOW

Präsenzdetektion: Low bei CS wenn als eingang geschalten und nix angesteckt

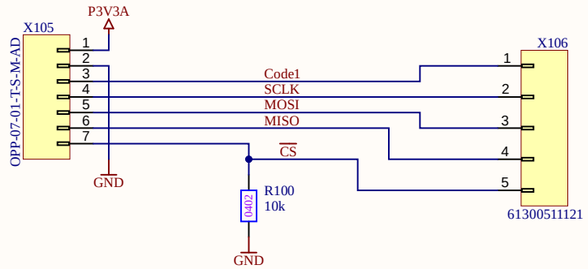

Power Input vom Nucleo

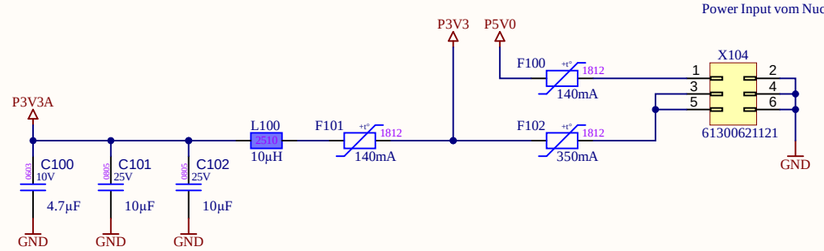

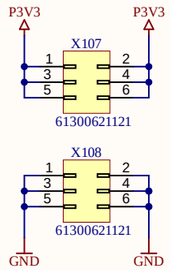

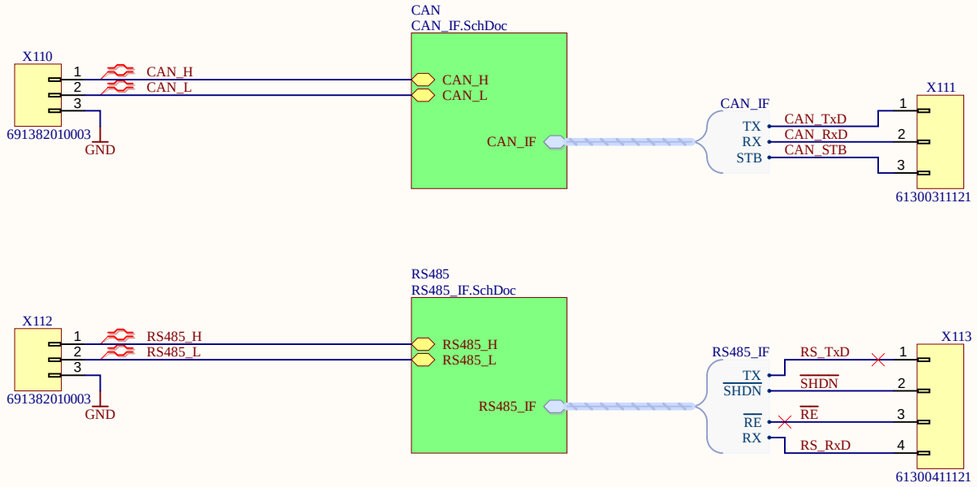

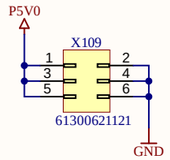

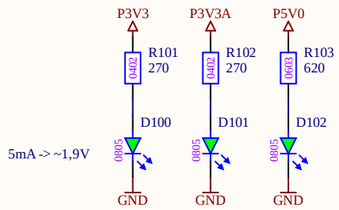

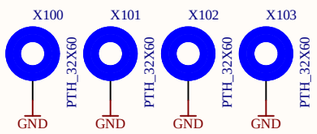

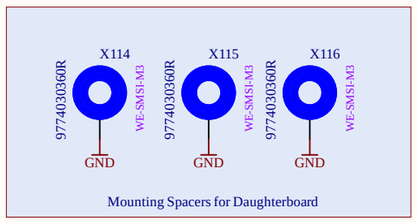

Special
Special.SchDoc

APPROVALS	DATE	Assembly Variant [No Variations]		FILE NAME Overview.SchDoc	
Engineer BuerchIM	25.04.2025	DONE electronics	PROJECT AFE_Carrier		VER 1.0
Reviewer na	na		DWG NO. PCB Drawing Number	SHEET 1 OF 4	REV

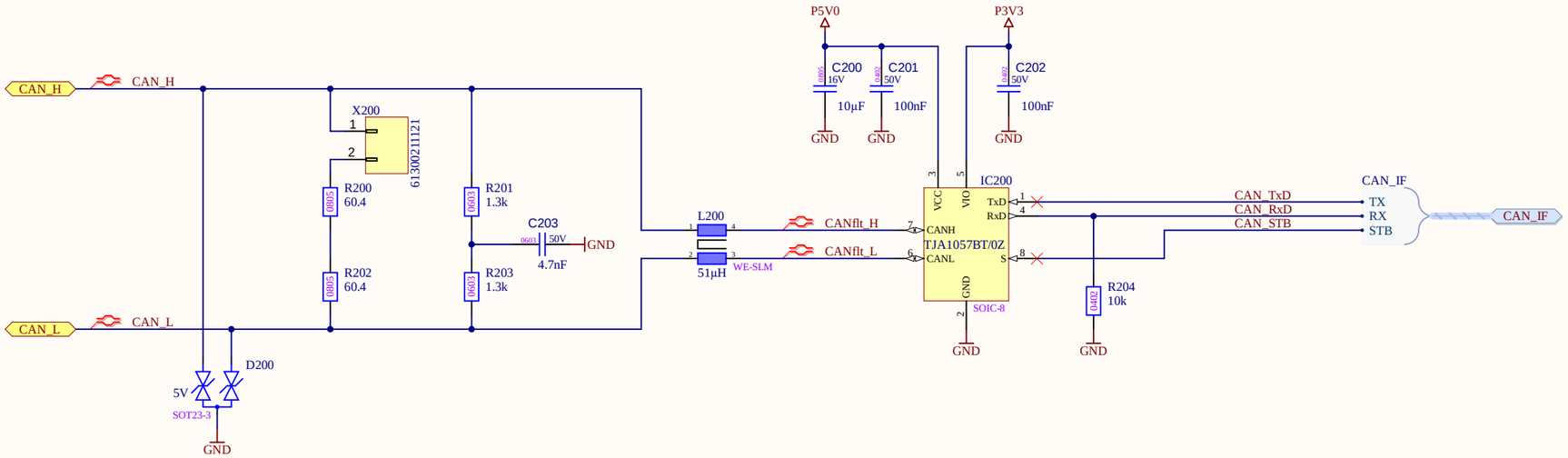

APPROVALS	DATE	Assembly Variant [No Variations]		FILE NAME CAN_IF.SchDoc	
Engineer BuerchIM	25.04.2025	DONE electronics	PROJECT AFE_Carrier		VER 1.0
Reviewer na	na		DWG NO. PCB Drawing Number	SHEET 2 OF 4	REV

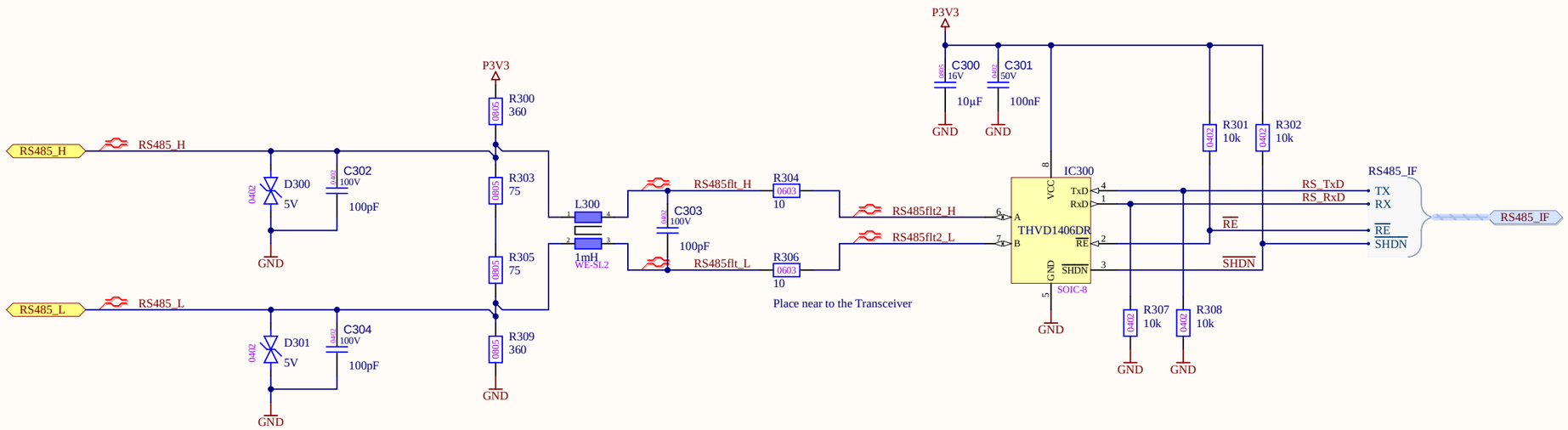

APPROVALS	DATE	Assembly Variant [No Variations]		FILE NAME RS485_IF.SchDoc	
Engineer BuerchIM	25.04.2025	DONE electronics	PROJECT AFE_Carrier		VER 1.0
Reviewer na	na		DWG NO. PCB Drawing Number	SHEET 3 OF 4	REV

FD900 FD901 FD902

LOGO900
Logo_DONE

LBL900
QR_Label Soldermask

ROHS900
SYM_RoHS

WEEE900
SYM_WEEE

ESD900
SYM_ESD

LF900
1 4
SYM_Lagen

APPROVALS	DATE	Assembly Variant [No Variations]		FILE NAME Special.SchDoc	
Engineer BuerchIM	25.04.2025	DONE electronics	PROJECT AFE_Carrier		VER 1.0
Reviewer na	na		DWG NO. PCB Drawing Number	SHEET 4 OF 4	REV