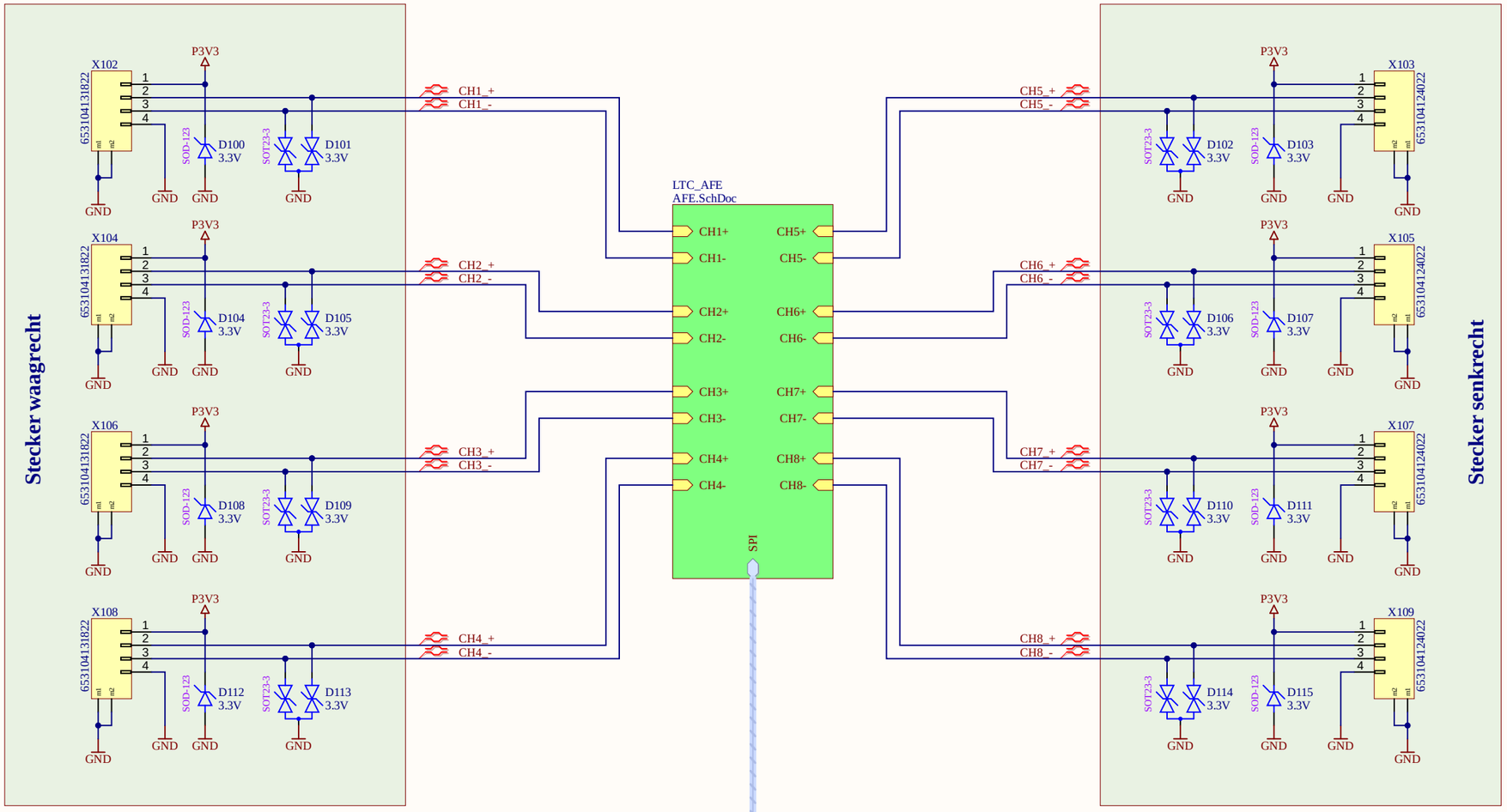

Vorsicherung für P3V3: 140mA Polyfuse

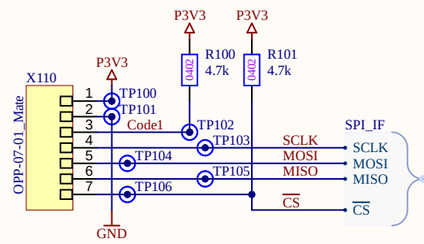

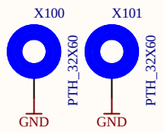

Special
Special.SchDoc

APPROVALS	DATE	Assembly Variant A1		FILE NAME Overview.SchDoc	
Engineer BuerchIM	23.04.2025	DONE electronics	PROJECT DBoard LTC AFE		VER 1.0
Reviewer na	na		DWG NO. PCB Drawing Number	SHEET 1 OF 3	REV

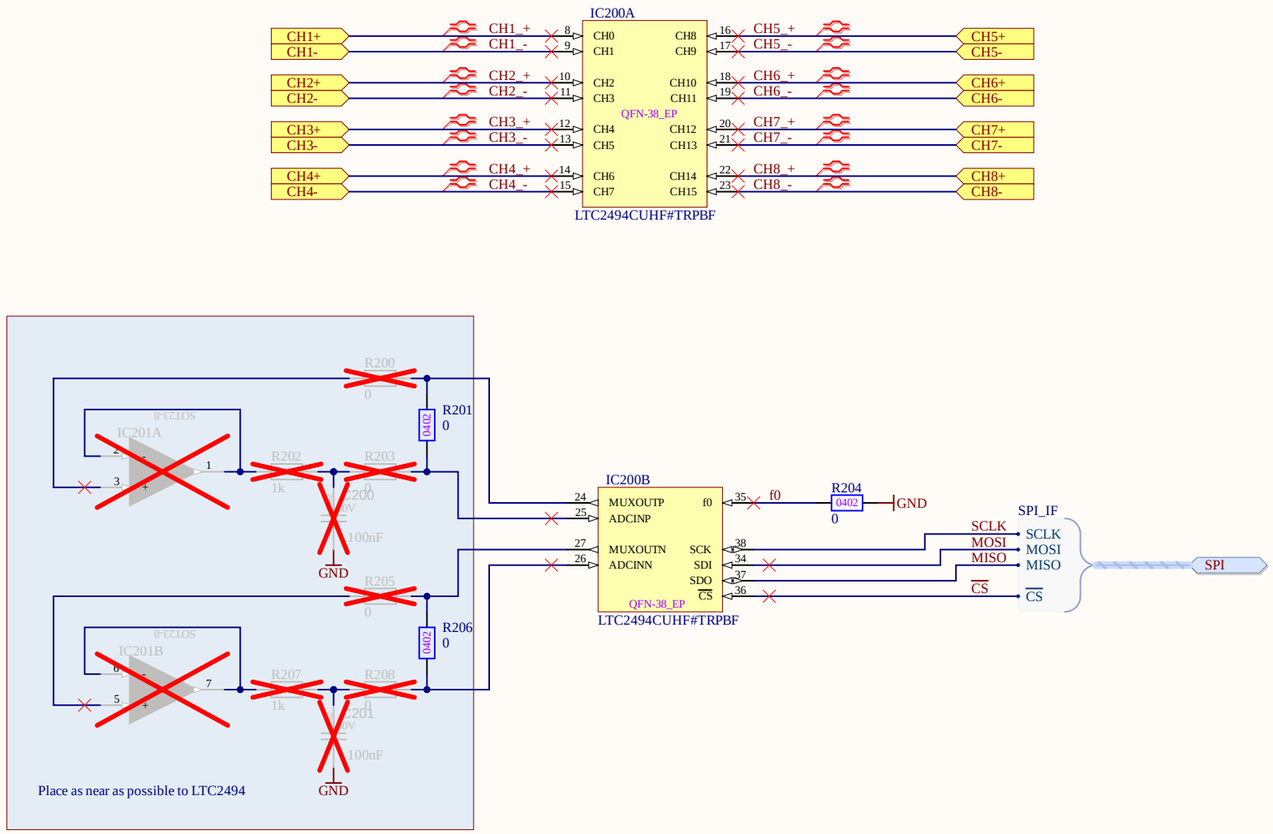

APPROVALS	DATE	Assembly Variant A1		FILE NAME AFE.SchDoc	
Engineer BuerchIM	23.04.2025	DONE electronics	PROJECT DBoard LTC AFE		VER 1.0
Reviewer na	na		DWG NO. PCB Drawing Number	SHEET 2 OF 3	REV

FD900 FD901 FD902

LOGO900
Logo_DONE

LBL900
QR_Label Soldermask

ROHS900
SYM_RoHS

WEEE900
SYM_WEEE

ESD900
SYM_ESD

LF900
1 4
SYM_Lagen

APPROVALS	DATE	Assembly Variant A1		FILE NAME Special.SchDoc	
Engineer BuerchIM	23.04.2025	DONE electronics	PROJECT DBoard LTC AFE		VER 1.0
Reviewer na	na		DWG NO. PCB Drawing Number	SHEET 3 OF 3	REV