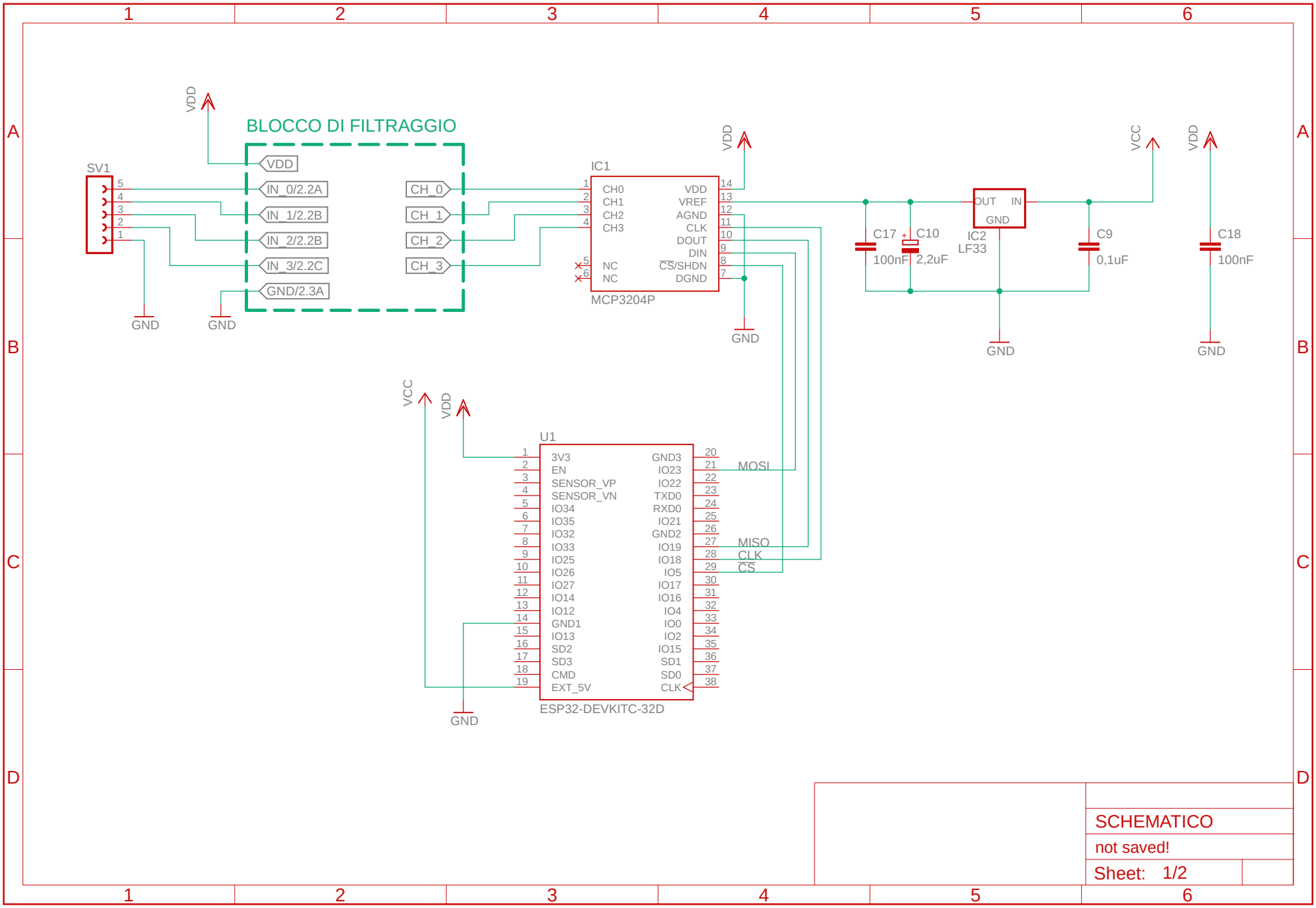

SCHEMATICO

not saved!

Sheet: 1/2

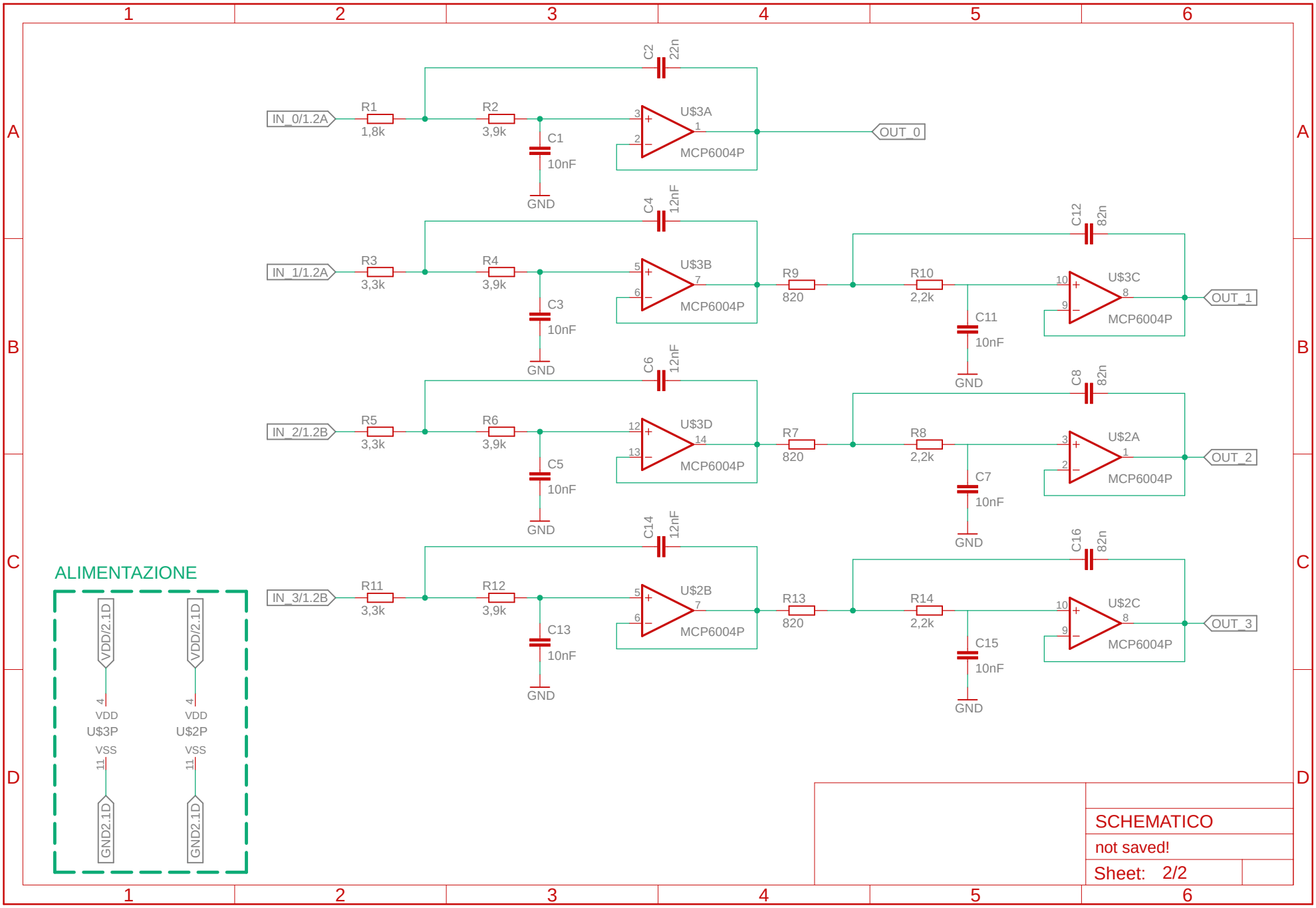
IN_0/1.2A
R1
1,8k
R2
3,9k
C1
10nF
GND
C2
22n
U$3A
MCP6004P
OUT_0
IN_1/1.2A
R3
3,3k
R4
3,9k
C3
10nF
GND
C4
12nF
U$3B
MCP6004P
R9
820
R10
2,2k
C11
10nF
GND
C12
82n
U$3C
MCP6004P
OUT_1
IN_2/1.2B
R5
3,3k
R6
3,9k
C5
10nF
GND
C6
12nF
U$3D
MCP6004P
R7
820
R8
2,2k
C7
10nF
GND
C8
82n
U$2A
MCP6004P
OUT_2
IN_3/1.2B
R11
3,3k
R12
3,9k
C13
10nF
GND
C14
12nF
U$2B
MCP6004P
R13
820
R14
2,2k
C15
10nF
GND
C16
82n
U$2C
MCP6004P
OUT_3
ALIMENTAZIONE
VDD/2.1D
VDD
U$3P
VSS
GND2.1D
VDD/2.1D
VDD
U$2P
VSS
GND2.1D
SCHEMATICO
not saved!
Sheet: 2/2