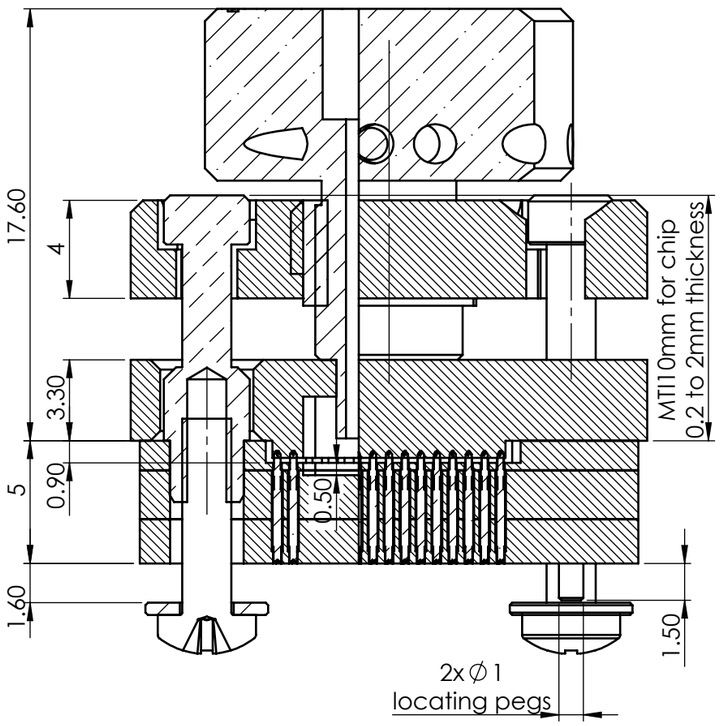

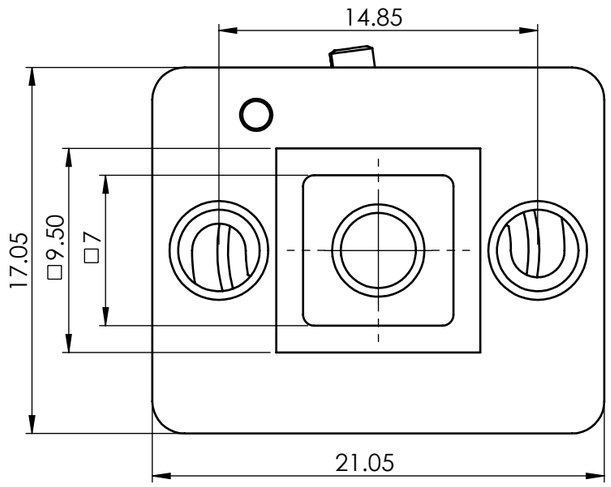

RETENTION FRAME

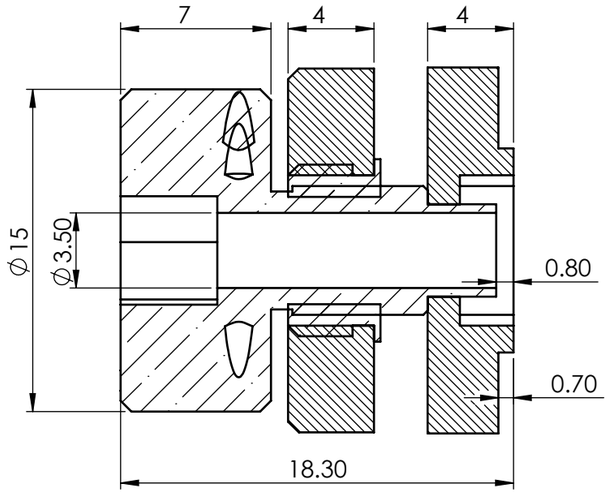

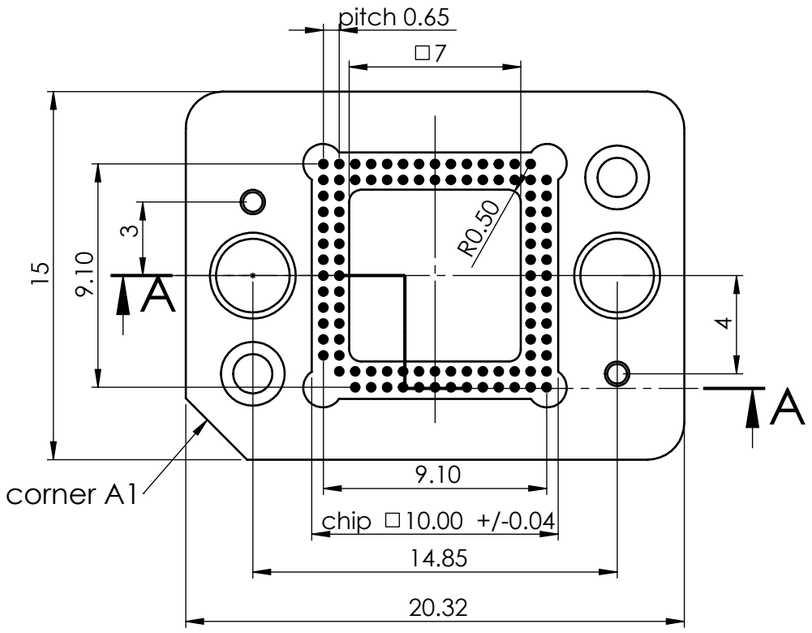

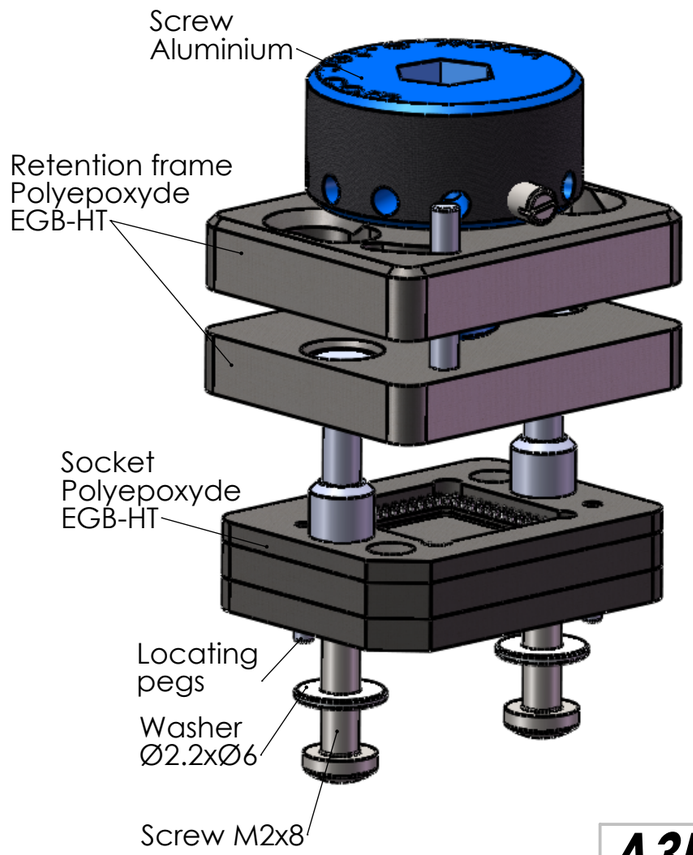

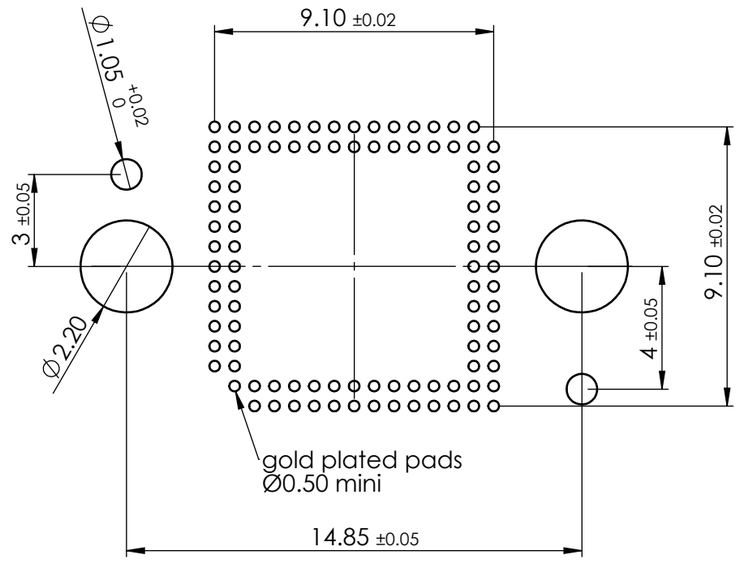

PCB LAYOUT

A3H Scale 4:1	UNLESS OTHERWISE SPECIFIED: DIMENSIONS ARE IN MILLIMETERS **GENERAL TOLERANCES ISO 2768m**	E-tec Interconnect	**Remark:** QFN FastLock socket, 100 pins, Pitch 0.65mm, matrix 15x15 Retention frame, Basic system8
patented	REV **0** modif:	"E-tec order code"	**LPF100-0691-15AB55L**
The information contained in this drawing is proprietary to **E-tec** and shall not be reproduced or disclosed in whole or in part or used for any design or manufacture except whe such user possesses direct, written authorization from **E-tec**	NAME / DATE DRAWN sme 19.05.2015 REV'D - - CHK'D - - APPV'D sme **19.05.2015**	"Production code"	LPF0100-06-0511P-15ABA-L

www.e-tec.com

G:\Konstruktion\Dessins Solidworks\Dessins\BGA\LPF\LPF100\LPF0100-06-0511P-15ABA-L\LPF0100-06-0511P-15ABA-L