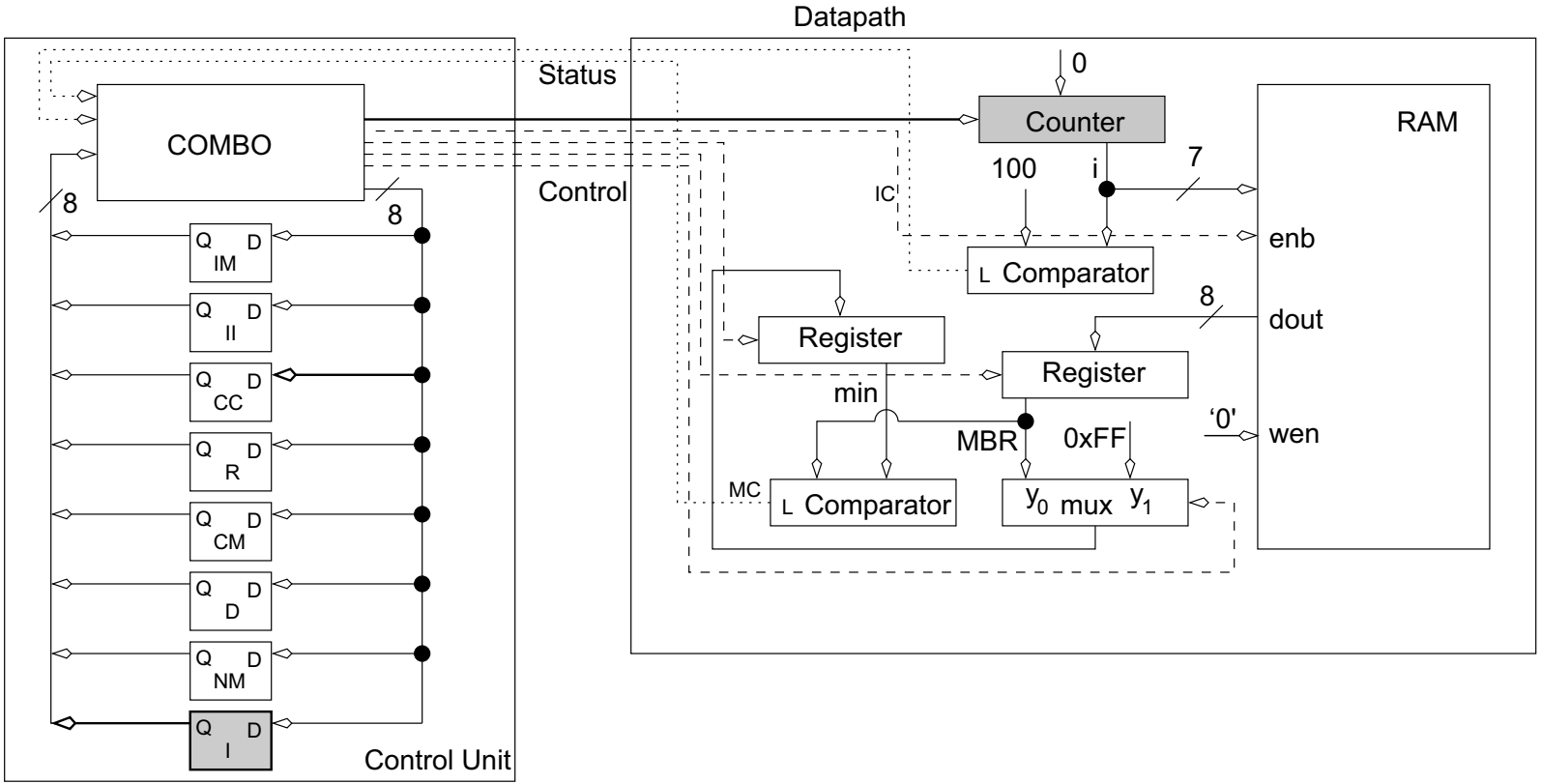
Datapath
Status
Control
COMBO
8
8
Q D
IM
Q D
II
Q D
CC
Q D
R
Q D
CM
Q D
D
Q D
NM
Q D
I
Control Unit
0
Counter
100
i
7
IC
L Comparator
Register
Register
min
MBR
0xFF
MC
L Comparator
y_0 mux y_1
RAM
enb
8
dout
'0'
wen