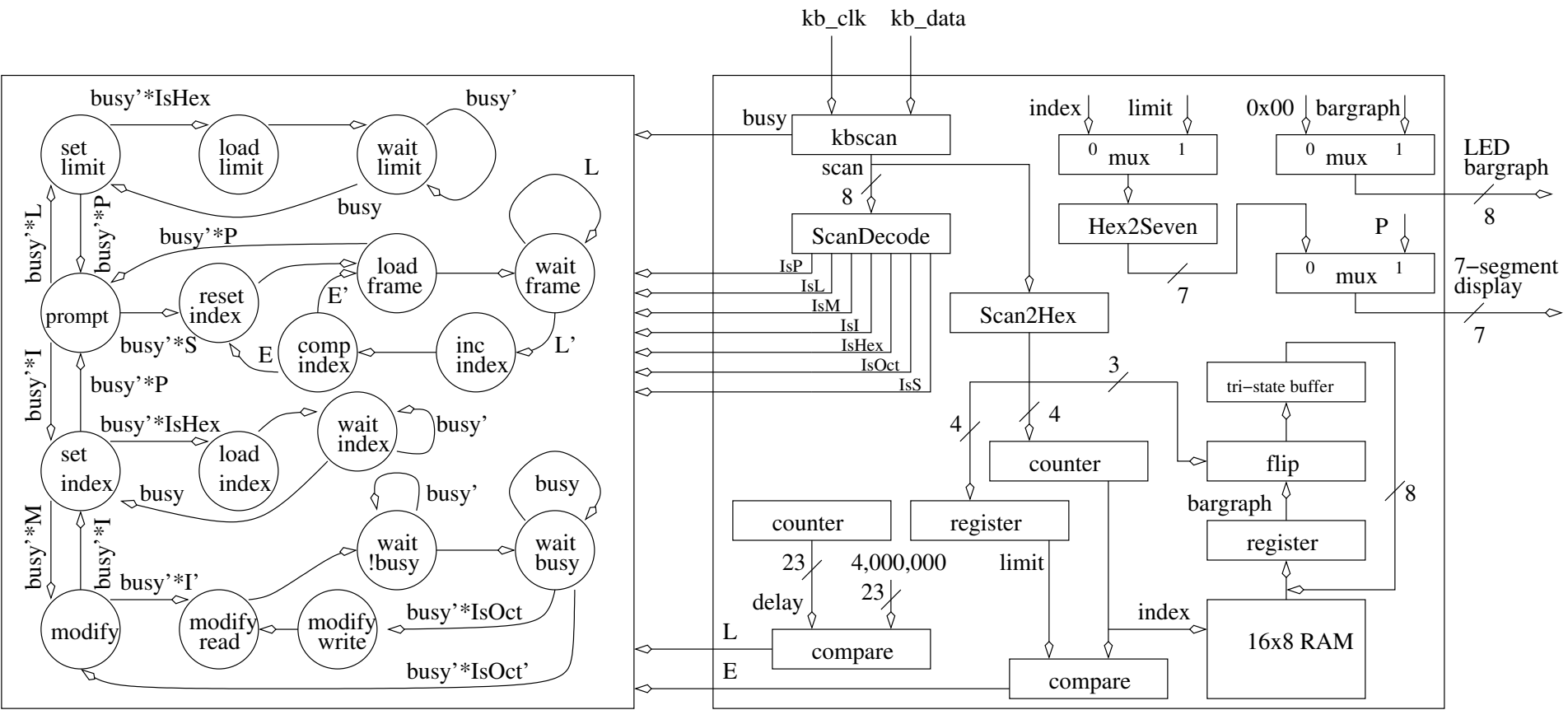
kb_clk
kb_data
busy'*IsHex
busy'
set limit
load limit
wait limit
busy
busy'*L
busy'*P
busy'*P
L
prompt
reset index
load frame
wait frame
E'
busy'*S
E
comp index
inc index
L'
busy'*I
busy'*P
busy'*IsHex
wait index
busy'
set index
load index
busy
busy'
busy
busy'*M
busy'*I
wait !busy
wait busy
busy'*I'
modify
modify read
modify write
busy'*IsOct
busy'*IsOct'
busy
kbscan
scan
8
ScanDecode
IsP
IsL
IsM
IsI
IsHex
IsOct
IsS
Scan2Hex
index
limit
0
mux
1
Hex2Seven
7
0x00
bargraph
0
mux
1
LED bargraph
8
P
0
mux
1
7−segment display
7
3
4
4
counter
tri−state buffer
flip
bargraph
register
8
counter
register
23
4,000,000
limit
delay
23
index
16x8 RAM
L
compare
E
compare