Chapter 3: Introduction to SQL

Chapter 3: Introduction to SQL

- Overview of the SQL Query Language
- Data Definition
- Basic Query Structure
- Additional Basic Operations
- Set Operations
- Null Values
- Aggregate Functions
- Nested Subqueries
- Modification of the Database

History

- IBM *Sequel language* developed as part of System R project at the IBM San Jose Research Laboratory
- Renamed Structured Query Language (SQL)
- ANSI and ISO standard SQL:
  - SQL-86, SQL-89, SQL-92
  - SQL:1999, SQL:2003, SQL:2008
- Commercial systems offer most, if not all, SQL-92 features, plus varying feature sets from later standards and special proprietary features.
  - Not all examples here may work on your particular system.

Data Definition Language

The SQL **data-definition language (DDL)** allows the specification of information about relations, including:

- The schema for each relation.
- The domain of values associated with each attribute.
- Integrity constraints
- And as we will see later, also other information such as
  - The set of indices to be maintained for each relations.
  - Security and authorization information for each relation.
  - The physical storage structure of each relation on disk.

Basic Types in SQL

- **char(n).** Fixed length character string, with user-specified length *n.*
- **varchar(n).** Variable length character strings, with user-specified maximum length *n.*
- **int.** Integer (a finite subset of the integers that is machine-dependent).
- **smallint.** Small integer (a machine-dependent subset of the integer domain type).
- **numeric(p,d).** Fixed point number, with user-specified precision of '*p*' digits, with 'd' digits to the right of decimal point.
- **real, double precision.** Floating point and double-precision floating point numbers, with machine-dependent precision.
- **float(n).** Floating point number, with user-specified precision of at least *n* digits.

Schem

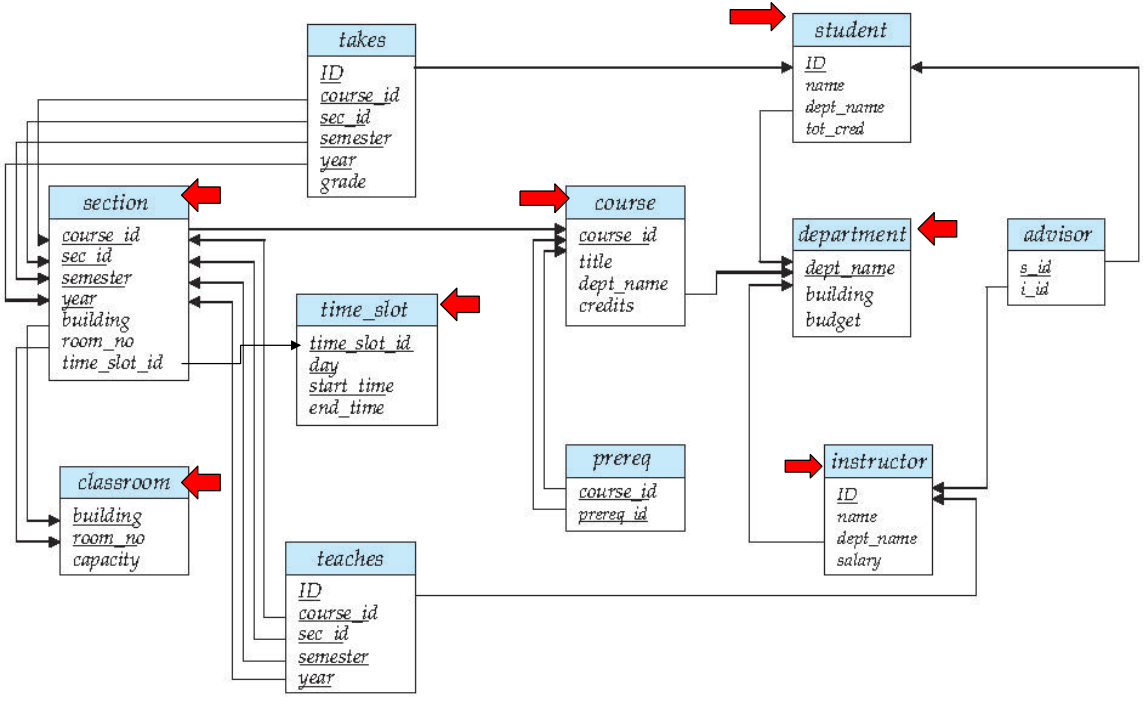
takes
ID
course_id
sec_id
semester
year
grade
student
ID
name
dept_name
tot_cred
section
course_id
sec_id
semester
year
building
room_no
time_slot_id
course
course_id
title
dept_name
credits
department
dept_name
building
budget
advisor
s_id
i_id
time_slot
time_slot_id
day
start_time
end_time
prereq
course_id
prereq_id
instructor
ID
name
dept_name
salary
classroom
building
room_no
capacity
teaches
ID
course_id
sec_id
semester
year

Create Table Construct

- An SQL relation is defined using the **create table** command:

  create table *r* (A_1 D_1, A_2 D_2, ..., A_n D_n,
  (integrity-constraint$_1$),
  ...,
  (integrity-constraint$_k$))

  - *r* is the name of the relation
  - each A_i is an attribute name in the schema of relation *r*
  - D_i is the data type of values in the domain of attribute A_i
- Example:

```
create table instructor (
    ID          char(5),
    name        varchar(20) not null,
    dept_name   varchar(20),
    salary      numeric(8,2))
```

Integrity Constraints in

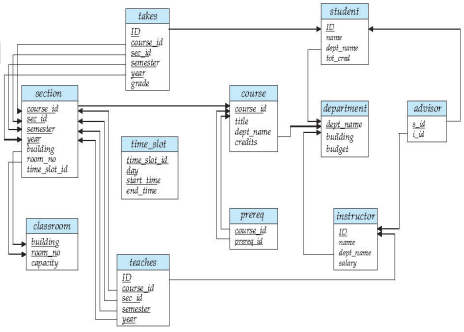

- **not null**
- **primary key** (A_1, ..., A_n)
- **foreign key** (A_m, ..., A_n) **references** *r*

Example: Declare *ID* as the primary key for *instructor*

.

```
create table instructor (
        ID          char(5),
        name        varchar(20) not null,
        dept_name   varchar(20),
        salary      numeric(8,2),
        primary key (ID),
        foreign key (dept_name) references department)
```

primary key declaration on an attribute automatically ensures **not null**

Class work

Schem

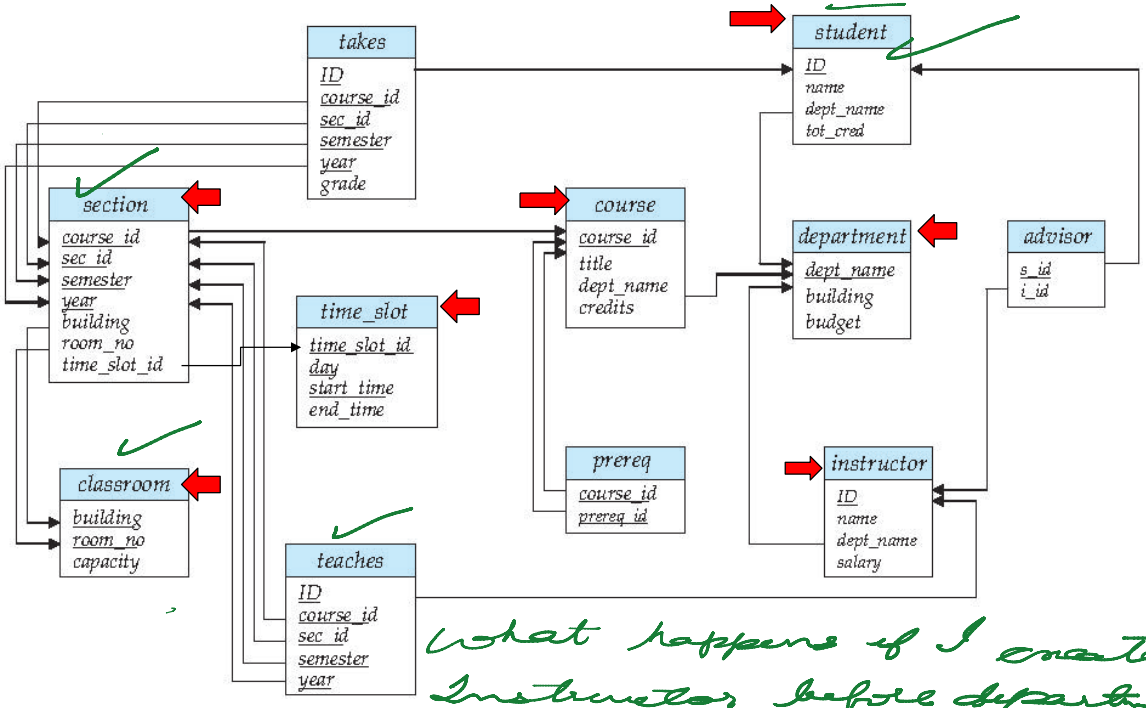

what happens if I create instructor before department

for Work out

And a Few More Relation Definitions

- **create table** *student* (
  ID **varchar**(5),
  name **varchar**(20) not null,
  dept_name **varchar**(20),
  tot_cred **numeric**(3,0),
  primary key (*ID*),
  foreign key *(dept_name)* **references** *department*);
- **create table** *takes* (
  ID **varchar**(5),
  course_id **varchar**(8),
  sec_id **varchar**(8),
  semester **varchar**(6),
  year **numeric**(4,0),
  grade **varchar**(2),
  primary key *(ID, course_id, sec_id, semester, year),*
  foreign key (*ID*) **references** *student,*
  foreign key (*course_id, sec_id, semester, year*) **references** *section*);
  - Note: *sec_id* can be dropped from primary key above, to ensure a student cannot be registered for two sections of the same course in the same semester

And still more

- **create table** *course* (
  course_id **varchar**(8) **primary key**,
  title **varchar(**50),
  dept_name **varchar**(20),
  credits **numeric**(2,0),
  foreign key *(dept_name)* **references** *department)*);

  - Primary key declaration can be combined with attribute declaration as shown above

Changes to the table

- **insert into** *instructor* **values** ('10211', 'Smith', 'Biology', 66000);
- **drop table** *student*
  - Deletes the table and its contents
- **delete from** *student [where conditions];*
  - Deletes all contents of table, but retains table
- **alter table**
  - **alter table** *r* **add** *A D*
    - where *A* is the name of the attribute to be added to relation *r* and *D* is the domain of *A*.
    - All tuples in the relation are assigned *null* as the value for the new attribute.
  - **alter table** *r* **drop** *A*
    - where *A* is the name of an attribute of relation *r*
    - Dropping of attributes not supported by many databases

Drop and Alter Table Constructs

- **alter table**
  - **Alter table table_Name Modify Col_Name datatype constraint(s)**
  - ***Alter table r modify A D C(s)***
    - where *A* is the name of the attribute to be added to relation *r* and *D* is the domain of *A*.

- Update the contents

```
UPDATE table_name SET column_name = new_value WHERE some_condition;
```

Lets take a sample table **student**,

student_id	name	age
101	Adam	15
102	Alex	
103	chris	14

```
UPDATE student SET age=18 WHERE student_id=102;
```

S_id	S_Name	age
101	Adam	15
102	Alex	18
103	chris	14