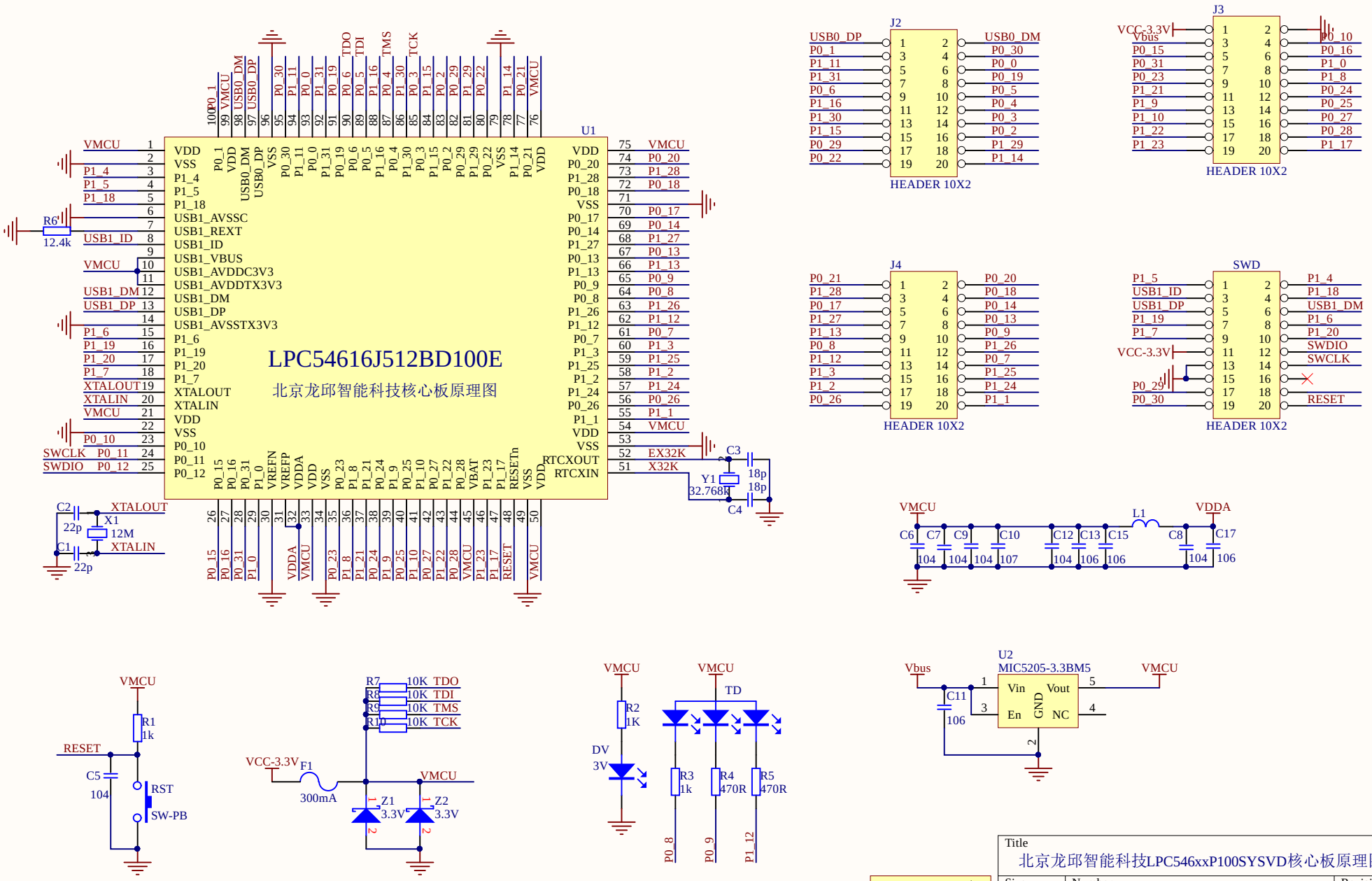


| | |
|---|---|
| Title | 北京龙邱智能科技LPC546xxP100SYSVD核心板原理图 |
| Size | A4 |
| Number | REV:mini |
| Revision | |
| Date: | 2019-10-24 |
| Sheet of | |
| File: | F:\PcbPrj\..\LQ_546P100_SYSVD.SchDoc |
| Drawn By: | |