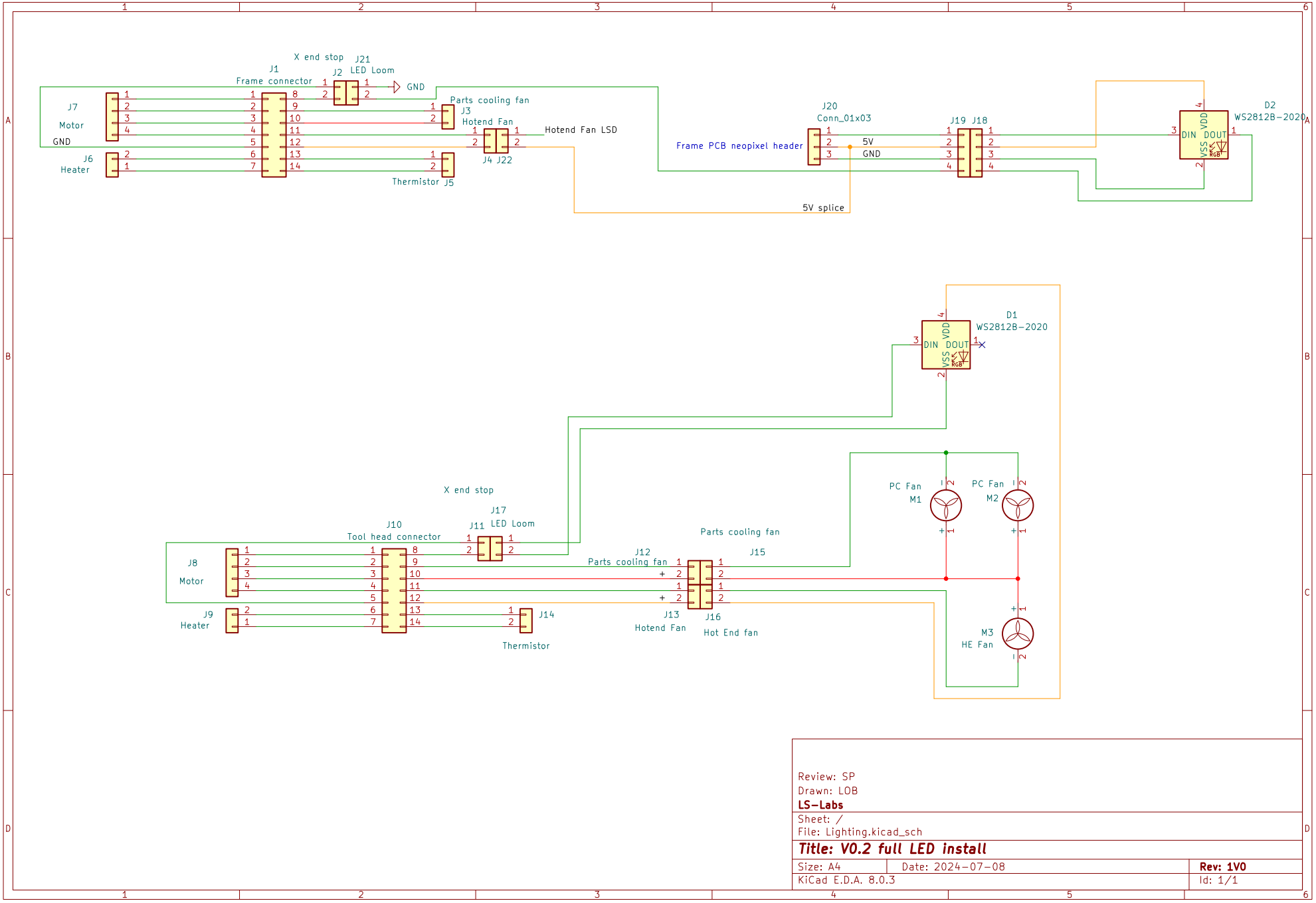

Review: SP
Drawn: LOB
LS-Labs
Sheet: /
File: Lighting.kicad_sch

Title: V0.2 full LED install

Size: A4	Date: 2024-07-08	**Rev: 1V0**
KiCad E.D.A. 8.0.3		Id: 1/1