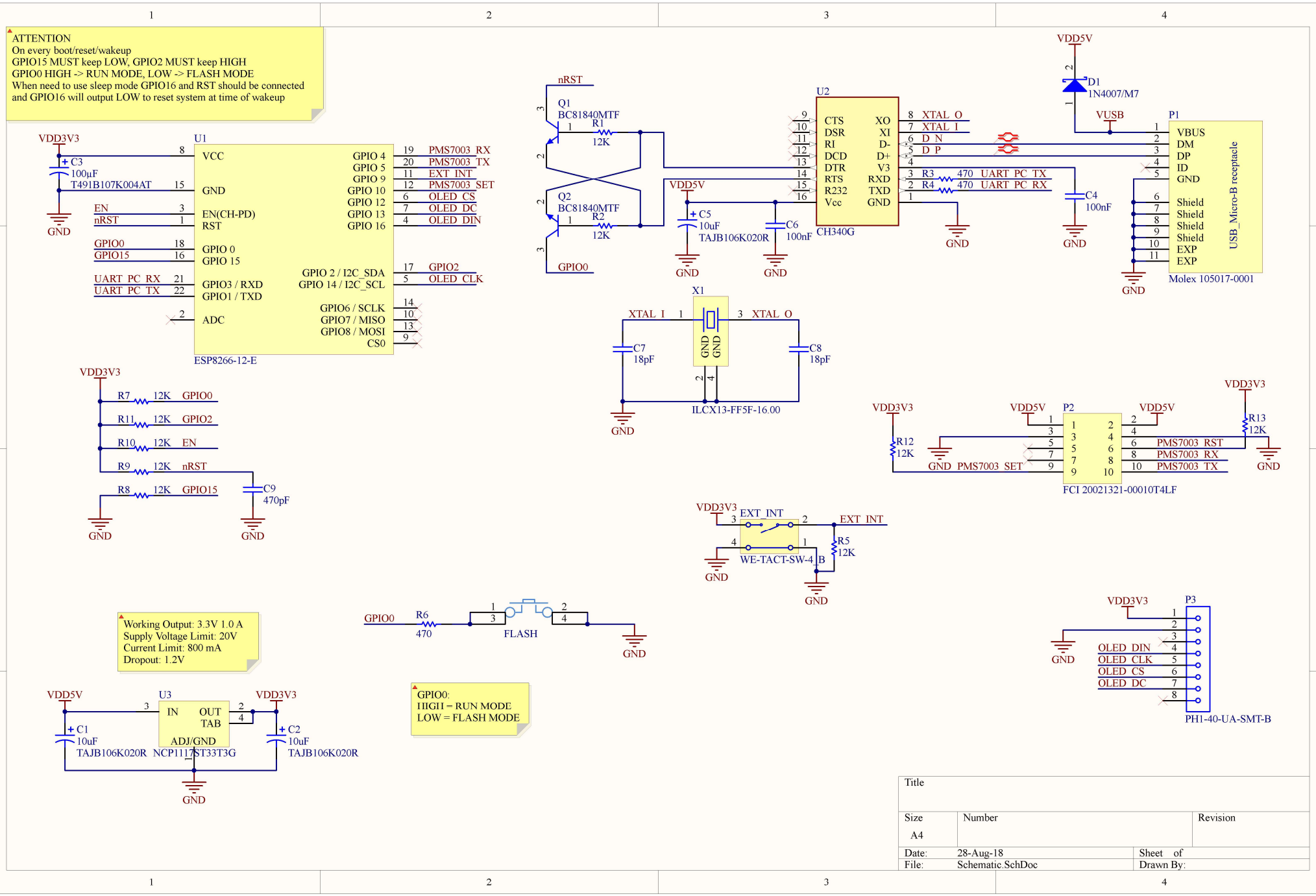
ATTENTION
On every boot/reset/wakeup
GPIO15 MUST keep LOW, GPIO2 MUST keep HIGH
GPIO0 HIGH -> RUN MODE, LOW -> FLASH MODE
When need to use sleep mode GPIO16 and RST should be connected
and GPIO16 will output LOW to reset system at time of wakeup
U1
ESP8266-12-E
VCC
GND
EN(CH-PD)
RST
GPIO 0
GPIO 15
GPIO3 / RXD
GPIO1 / TXD
ADC
GPIO 4
GPIO 5
GPIO 9
GPIO 10
GPIO 12
GPIO 13
GPIO 16
GPIO 2 / I2C_SDA
GPIO 14 / I2C_SCL
GPIO6 / SCLK
GPIO7 / MISO
GPIO8 / MOSI
CS0
PMS7003_RX
PMS7003_TX
EXT_INT
PMS7003_SET
OLED_CS
OLED_DC
OLED_DIN
GPIO2
OLED_CLK
VDD3V3
C3
100µF
T491B107K004AT
EN
nRST
GPIO0
GPIO15
UART_PC_RX
UART_PC_TX
R7 12K GPIO0
R11 12K GPIO2
R10 12K EN
R9 12K nRST
R8 12K GPIO15
C9
470pF
Q1
BC81840MTF
R1
12K
Q2
BC81840MTF
R2
12K
U2
CH340G
CTS
DSR
RI
DCD
DTR
RTS
R232
Vcc
XO
XI
D-
D+
V3
RXD
TXD
GND
XTAL_O
XTAL_I
D_N
D_P
R3 470 UART_PC_TX
R4 470 UART_PC_RX
VDD5V
C5
10uF
TAJB106K020R
C6
100nF
C4
100nF
D1
1N4007/M7
VUSB
P1
VBUS
DM
DP
ID
GND
Shield
EXP
USB_Micro-B receptacle
Molex 105017-0001
X1
ILCX13-FF5F-16.00
C7
18pF
C8
18pF
P2
FCI 20021321-00010T4LF
PMS7003_RST
PMS7003_RX
PMS7003_TX
PMS7003_SET
R12
12K
R13
12K
EXT_INT
WE-TACT-SW-4
R5
12K
GPIO0
R6
470
FLASH
Working Output: 3.3V 1.0 A
Supply Voltage Limit: 20V
Current Limit: 800 mA
Dropout: 1.2V
U3
IN
OUT
TAB
ADJ/GND
NCP1117ST33T3G
C1
10uF
TAJB106K020R
C2
10uF
TAJB106K020R
GPIO0:
HIGH = RUN MODE
LOW = FLASH MODE
P3
PH1-40-UA-SMT-B
Title
Size
A4
Number
Revision
Date: 28-Aug-18
Sheet of
File: Schematic.SchDoc
Drawn By: