ITEM NO.	PART NUMBER	DESCRIPTION	QTY.
1	WELDS		1
2	DPP-4483230-001		2
3	DPP-4483231-001		1
4	DPP-4483232-001		4
5	DPP-4483228-001		2
6	DPP-4480209-001	MP-00037664	1
7	DPP-4483227-001		3
8	DPP-4483257		1
9	DPP-4483258		1
10	DPP-4483236-001		4
11	DPP-4483283-001		6
12	DPP-4483226-001		4
13	DPP-0193161		8

REV.	DESCRIPTION	DATE	APPROVED
-	INITIAL RELEASE	6/10/2026	LM

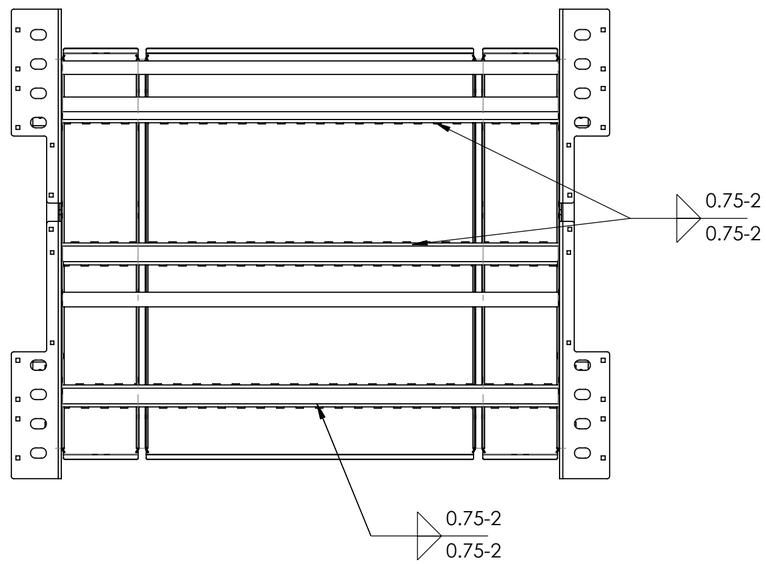

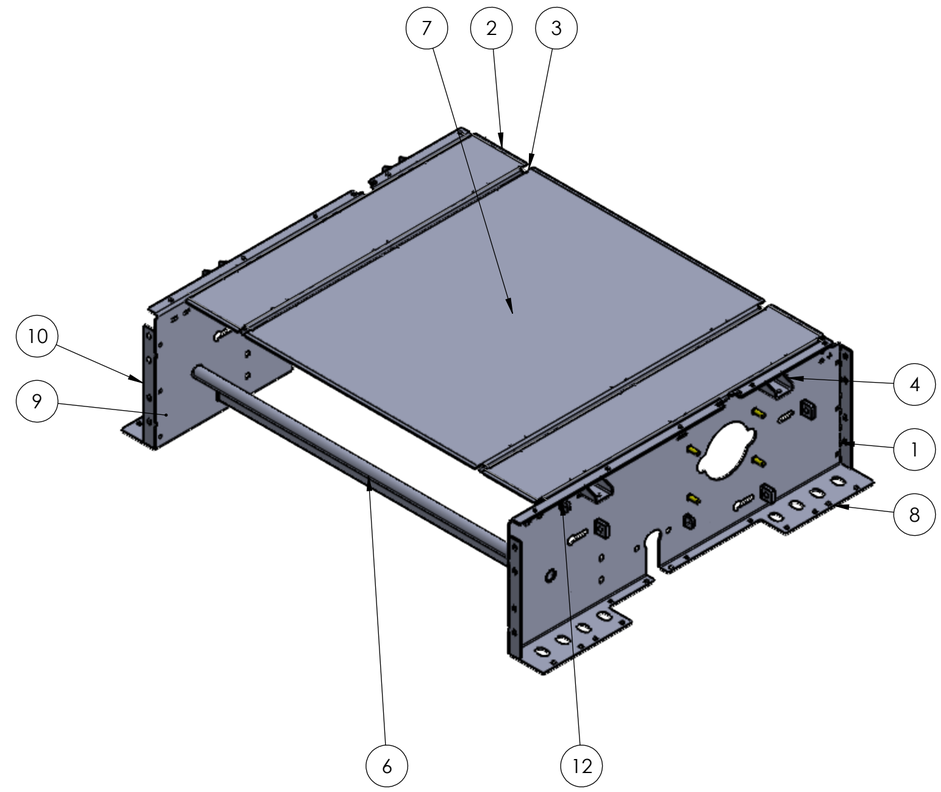

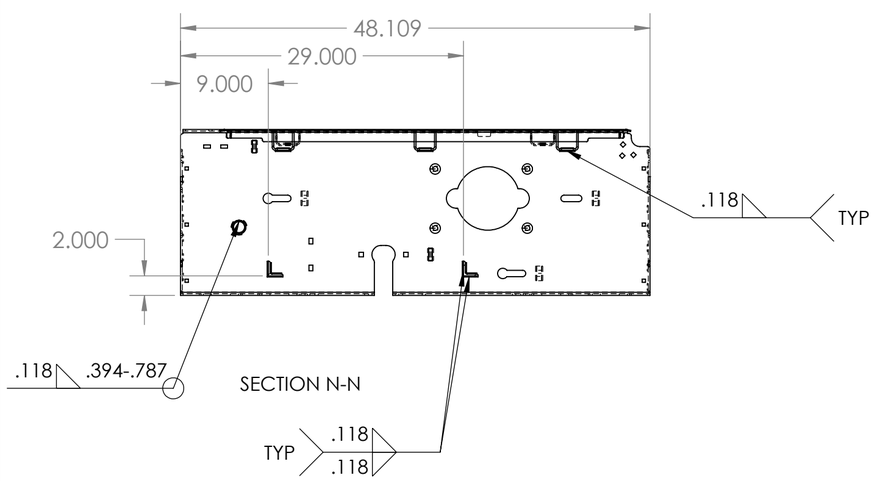

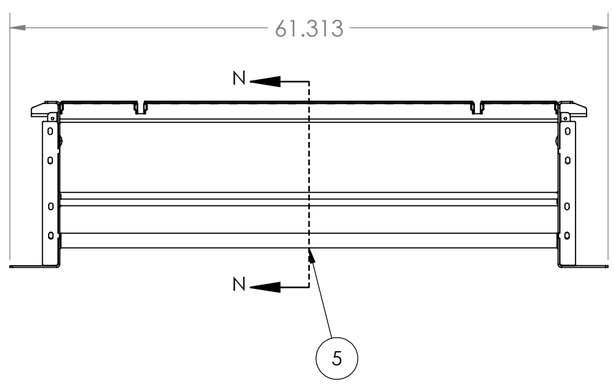

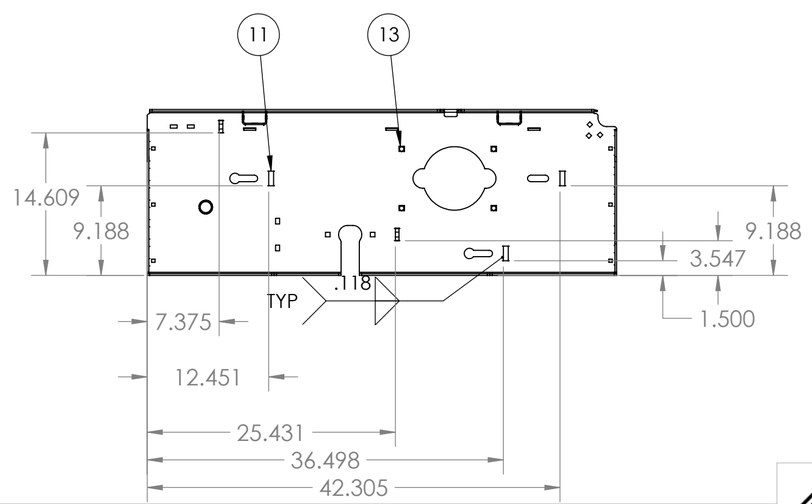

NOTES: (UNLESS OTHERWISE SPECIFIED)

1. DEBURR AND BREAK ALL SHARP EDGES.
2. ALL DIMENSIONS **OD** UNLESS NOTED.

Part Number: 4A851AE		Customer Rev: -	Date: 6/10/2026
Description: DPP-4483239		Matl:	Weight: 31.909 lbs
		Finish:	Drawn By: LM
Customer: XOMETRY		Powdercoat: RAL 7035	Page: 1 of 13
		Alt. Part #: 4A851AE	

315 S 3rd Ave
Yakima, WA 98902
509-453-9143

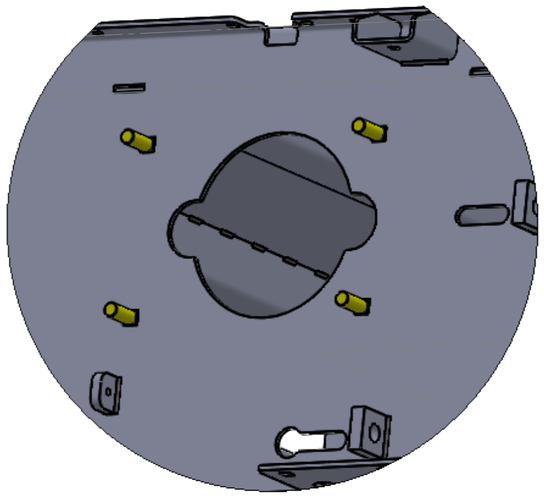

DETAIL R
SCALE 1 : 4

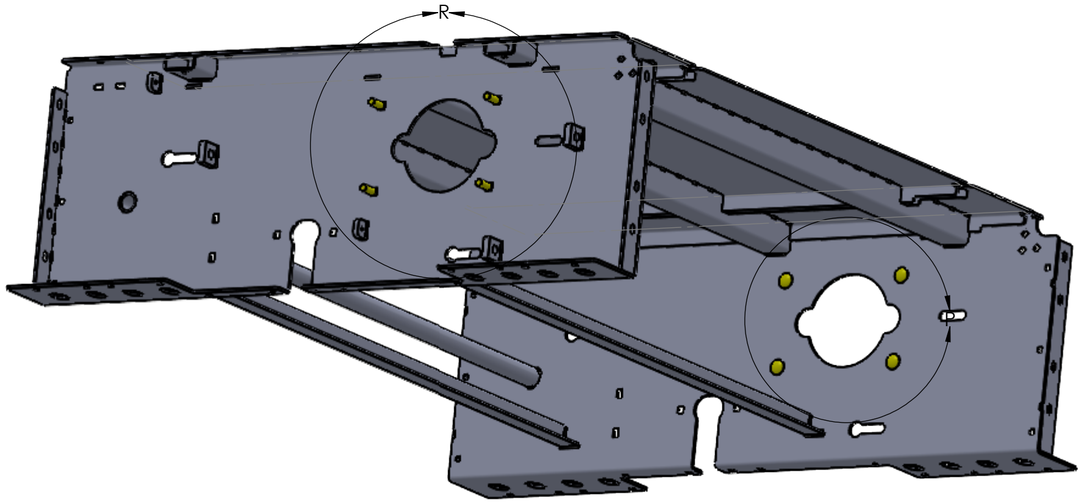

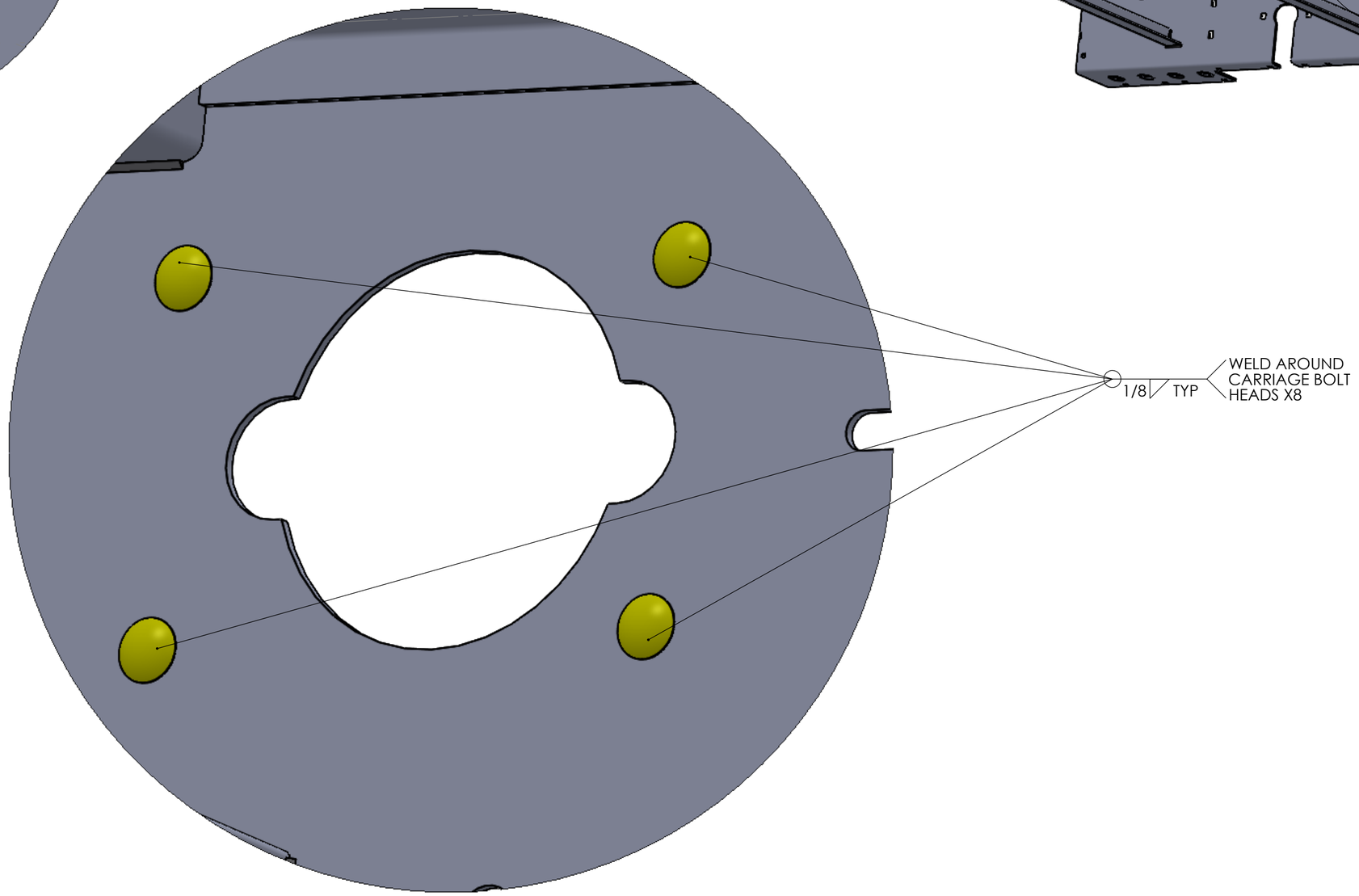

DETAIL P
SCALE 1 : 1.5

Part Number:		Customer Rev:	Date:
PROPRIETARY AND CONFIDENTIAL THE INFORMATION CONTAINED IN THIS DRAWING IS THE SOLE PROPERTY OF ASAP METAL FABRICATORS. ANY REPRODUCTION IN PART OR AS A WHOLEWITHOUT THE WRITTEN PERMISSION OF ASAP METAL FABRICATORS IS PROHIBITED.	Description:	Matl:	Weight: 31.909 lbs
		Finish:	Drawn By:
	Customer:	Powdercoat:	Page: 2 of 13
		Alt. Part #: 4A851AE	

315 S 3rd Ave
Yakima, WA 98902
509-453-9143

ITEM NO.	PART NUMBER	DESCRIPTION	QTY.
1	DPP-4483230-001		1

REV.	DESCRIPTION	DATE	APPROVED
-	INITIAL RELEASE	6/10/2026	LM

HRPO - 11 GA
.125 TOP
.984 BOT
SB = .119 @ 90°
SB = .021 @ 30°
SB = .006 @ 10°

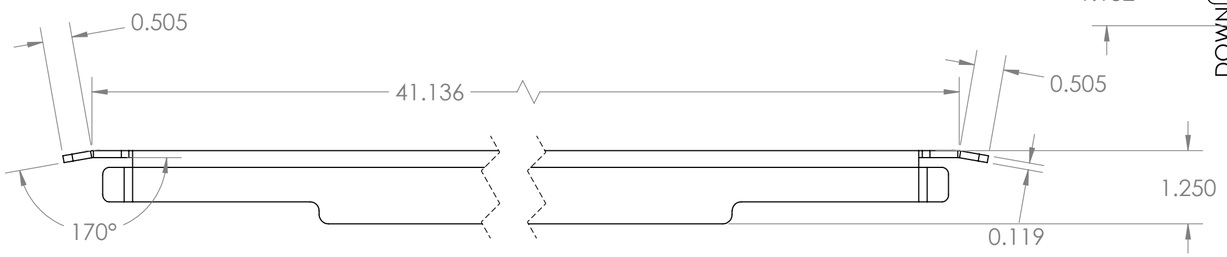

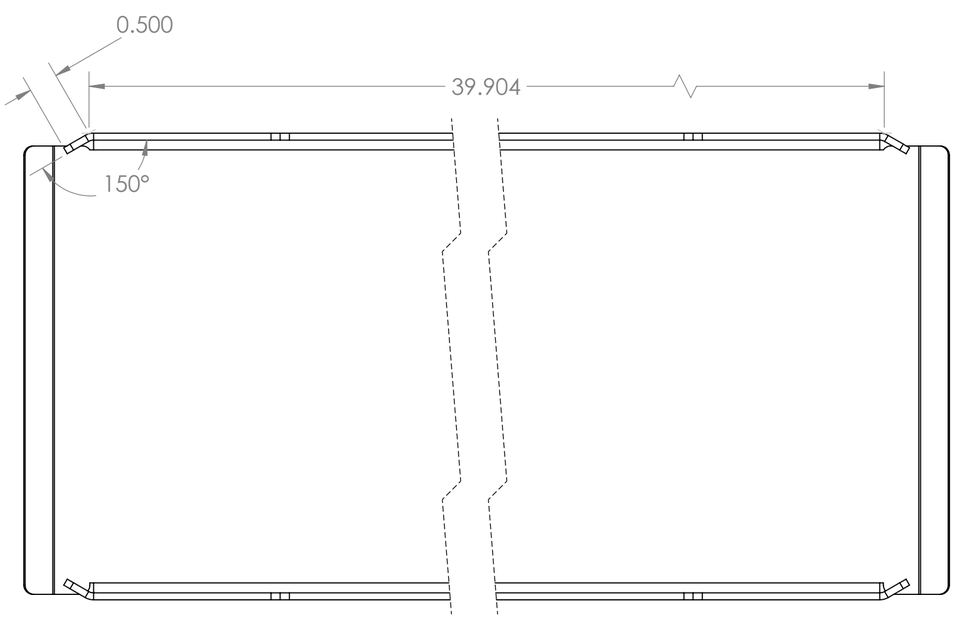

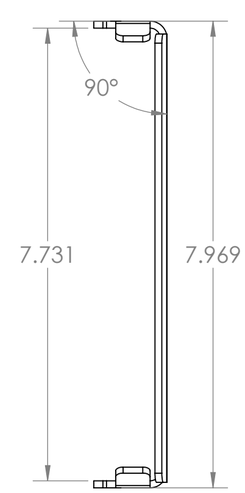

NOTES: (UNLESS OTHERWISE SPECIFIED)

1. DEBURR AND BREAK ALL SHARP EDGES.
2. ALL DIMENSIONS **OD** UNLESS NOTED.

Part Number: 4A851AE		Customer Rev: -	Date: 6/10/2026
PROPRIETARY AND CONFIDENTIAL THE INFORMATION CONTAINED IN THIS DRAWING IS THE SOLE PROPERTY OF ASAP METAL FABRICATORS. ANY REPRODUCTION IN PART OR AS A WHOLEWITHOUT THE WRITTEN PERMISSION OF ASAP METAL FABRICATORS IS PROHIBITED.	Description: DPP-4483239	Matl: HRPO - 11 GA	Weight: 1.778 lbs
		Finish:	Drawn By: LM
	Customer: XOMETRY	Powdercoat: RAL 7035	Page: 3 of 13
		Alt. Part #: 4A851AE	

315 S 3rd Ave
Yakima, WA 98902
509-453-9143

ITEM NO.	PART NUMBER	DESCRIPTION	QTY.
1	DPP-4483231-001		1

REV.	DESCRIPTION	DATE	APPROVED
-	INITIAL RELEASE	6/10/2026	LM

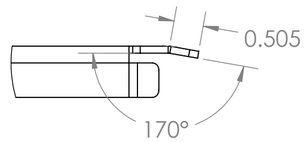

DETAIL K
SCALE 1 : 2

HRPO - 11 GA
.125 TOP
.984 BOT
SB = .119 @ 90°
SB = .021 @ 30°
SB = .006 @ 10°

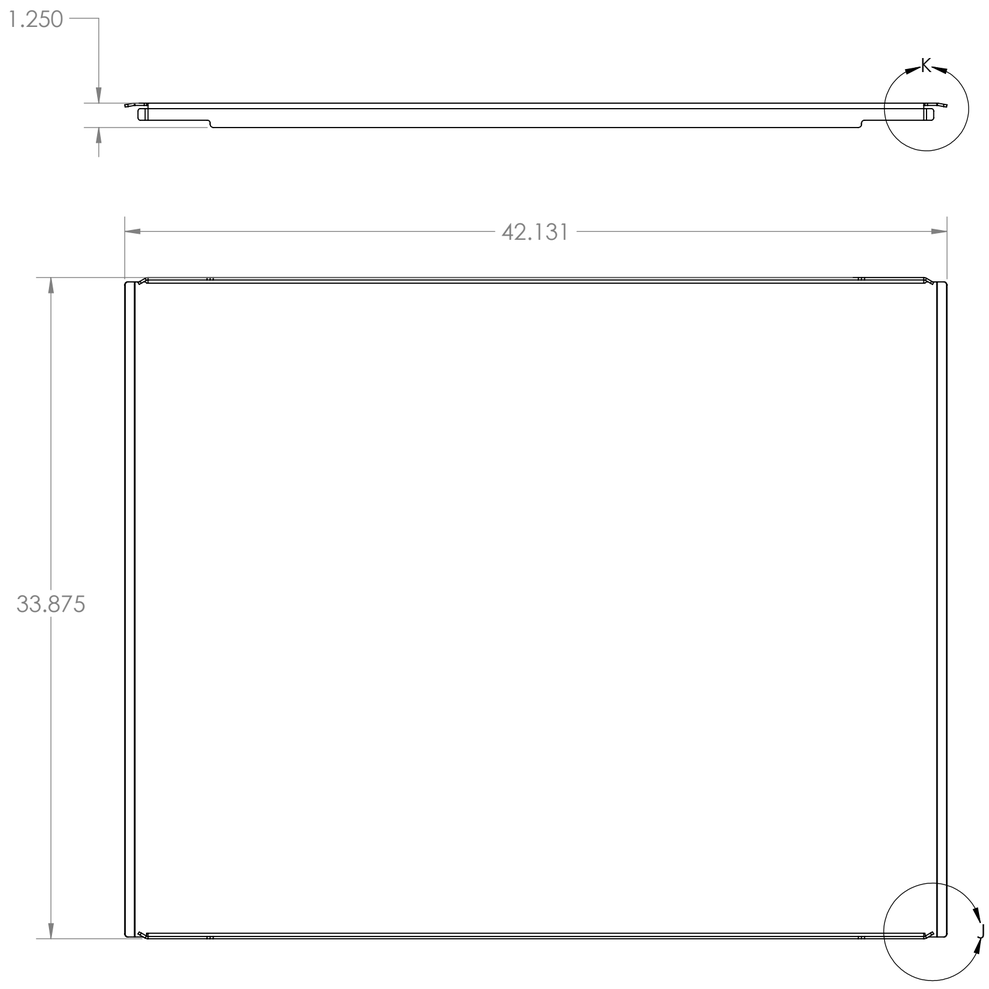

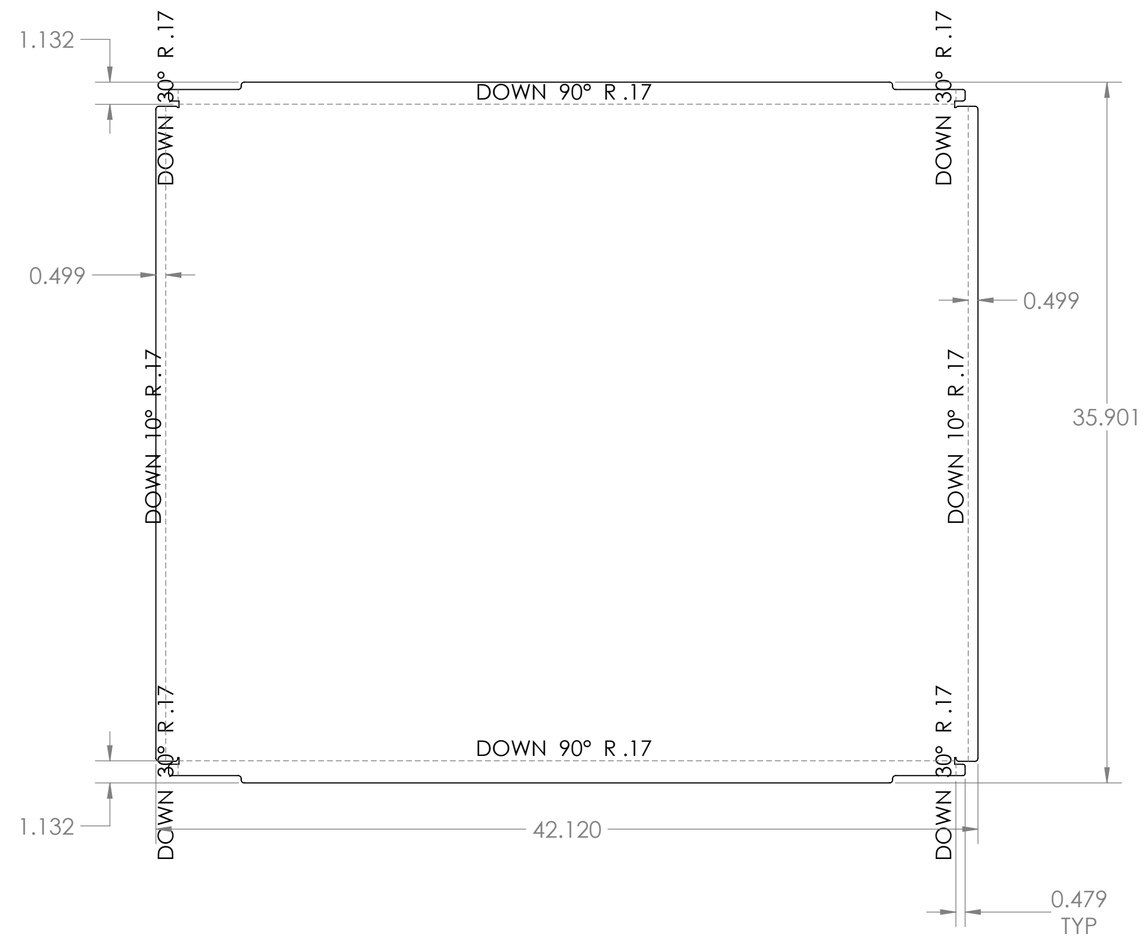

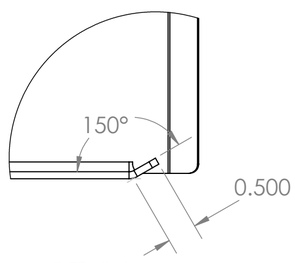

DETAIL J
SCALE 1 : 2

NOTES: (UNLESS OTHERWISE SPECIFIED)

1. DEBURR AND BREAK ALL SHARP EDGES.
2. ALL DIMENSIONS **OD** UNLESS NOTED.

PROPRIETARY AND CONFIDENTIAL
THE INFORMATION CONTAINED IN THIS DRAWING IS THE SOLE PROPERTY OF ASAP METAL FABRICATORS. ANY REPRODUCTION IN PART OR AS A WHOLEWITHOUT THE WRITTEN PERMISSION OF ASAP METAL FABRICATORS IS PROHIBITED.

Part Number: 4A851AE	Customer Rev: -	Date: 6/10/2026
Description: DPP-4483239	Matl: HRPO - 11 GA	Weight: 6.469 lbs
	Finish:	Drawn By: LM
Customer: XOMETRY	Powdercoat: RAL 7035	Page: 4 of 13
	Alt. Part #: 4A851AE	

315 S 3rd Ave
Yakima, WA 98902
509-453-9143

ITEM NO.	PART NUMBER	DESCRIPTION	QTY.
1	DPP-4483232-001		1

REV.	DESCRIPTION	DATE	APPROVED
-	INITIAL RELEASE	6/10/2026	LM

HRPO - 10 GA
.125 TOP
.984 BOT
SB = .130 @ 90°

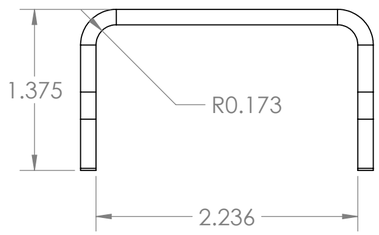

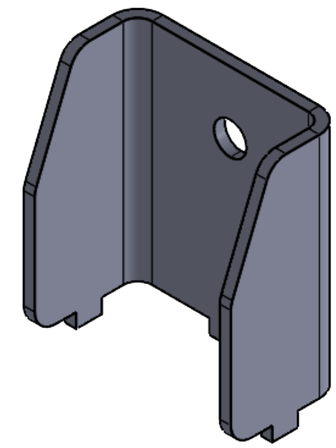

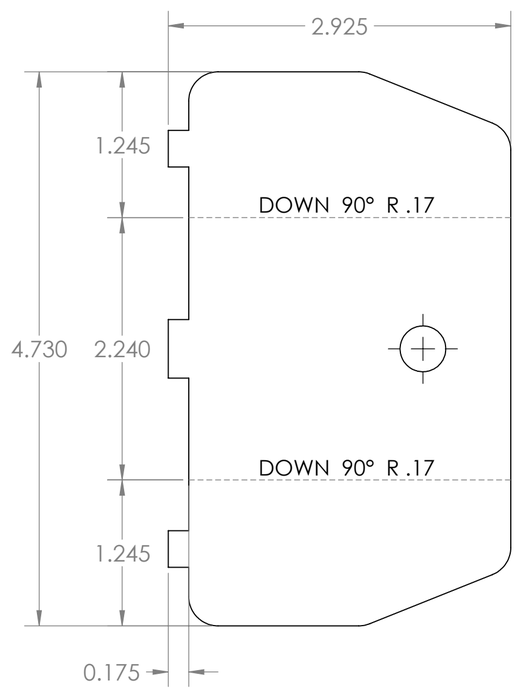

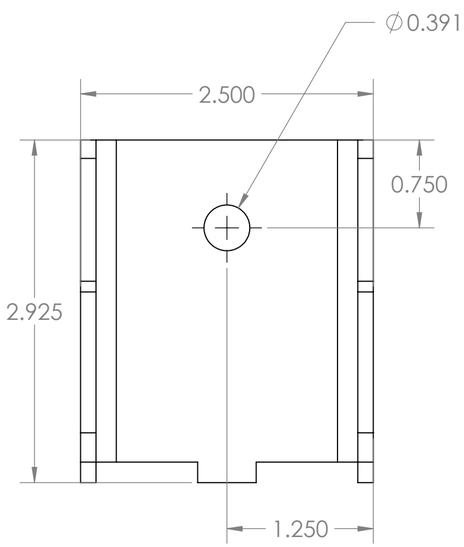

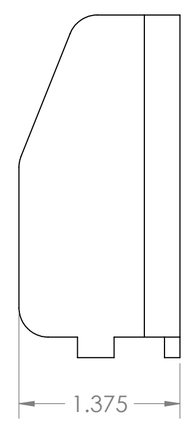

NOTES: (UNLESS OTHERWISE SPECIFIED)

1. DEBURR AND BREAK ALL SHARP EDGES.
2. ALL DIMENSIONS **OD** UNLESS NOTED.

Part Number: 4A851AE		Customer Rev: -	Date: 6/10/2026
PROPRIETARY AND CONFIDENTIAL THE INFORMATION CONTAINED IN THIS DRAWING IS THE SOLE PROPERTY OF ASAP METAL FABRICATORS. ANY REPRODUCTION IN PART OR AS A WHOLEWITHOUT THE WRITTEN PERMISSION OF ASAP METAL FABRICATORS IS PROHIBITED.	Description: DPP-4483239	Matl: HRPO - 10 GA	Weight: 0.060 lbs
		Finish:	Drawn By: LM
	Customer: XOMETRY	Powdercoat: RAL 7035	Page: 5 of 13
		Alt. Part #: 4A851AE	

315 S 3rd Ave
Yakima, WA 98902
509-453-9143

ITEM NO.	PART NUMBER	DESCRIPTION	QTY.
1	DPP-4483228-001		1

REV.	DESCRIPTION	DATE	APPROVED
-	INITIAL RELEASE	6/10/2026	LM

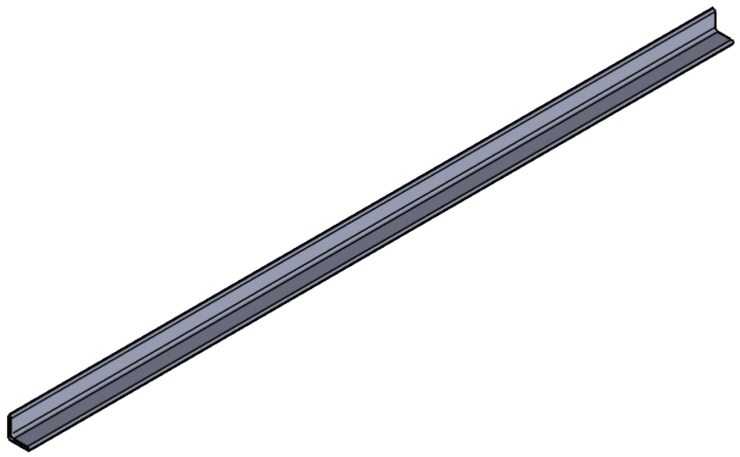

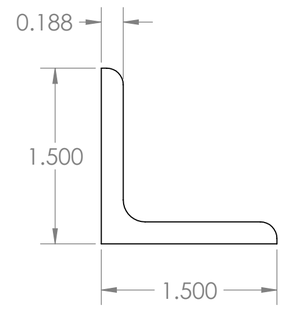

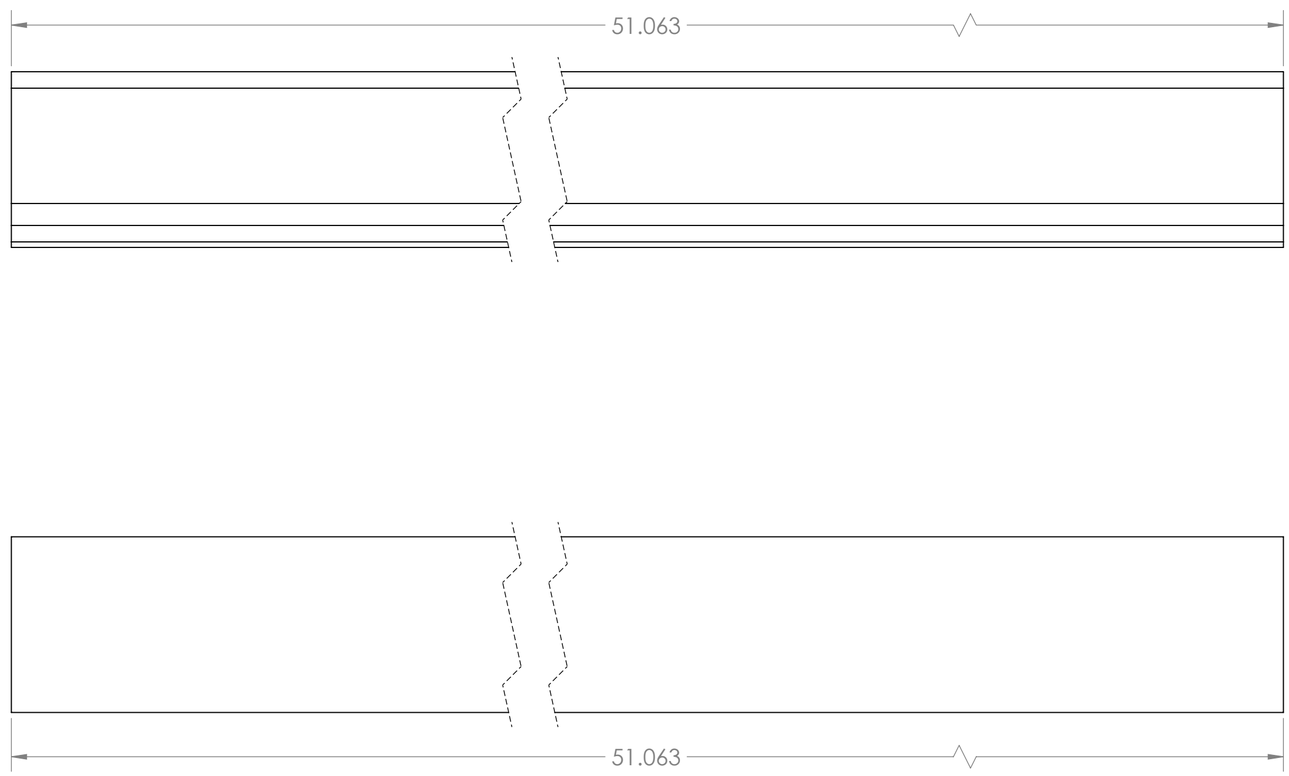

NOTES: (UNLESS OTHERWISE SPECIFIED)

1. DEBURR AND BREAK ALL SHARP EDGES.
2. ALL DIMENSIONS **OD** UNLESS NOTED.

PROPRIETARY AND CONFIDENTIAL
THE INFORMATION CONTAINED IN THIS DRAWING IS THE SOLE PROPERTY OF ASAP METAL FABRICATORS. ANY REPRODUCTION IN PART OR AS A WHOLEWITHOUT THE WRITTEN PERMISSION OF ASAP METAL FABRICATORS IS PROHIBITED.

Part Number: 4A851AE		Customer Rev: -	Date: 6/10/2026
Description: DPP-4483239		Matl: ANGL - 1 1/2 X 1 1/2 X 3/16	Weight: 0.971 lbs
		Finish:	Drawn By: LM
Customer: XOMETRY		Powdercoat: RAL 7035	Page: 6 of 13
		Alt. Part #: 4A851AE	

315 S 3rd Ave
Yakima, WA 98902
509-453-9143

ITEM NO.	PART NUMBER	DESCRIPTION	QTY.
1	DPP-4480209-001	MP-00037664	1

REV.	DESCRIPTION	DATE	APPROVED
-	INITIAL RELEASE	6/10/2026	LM

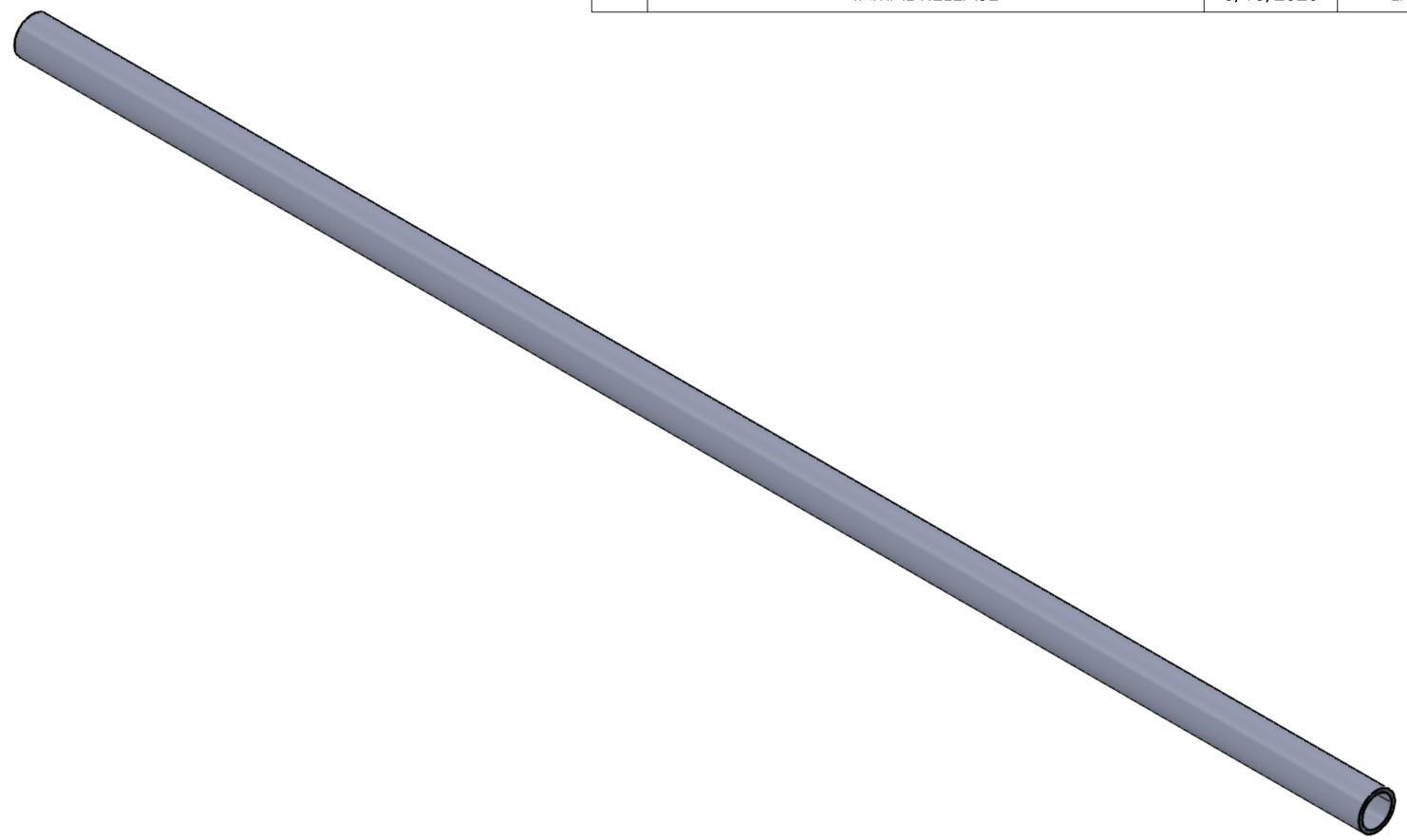

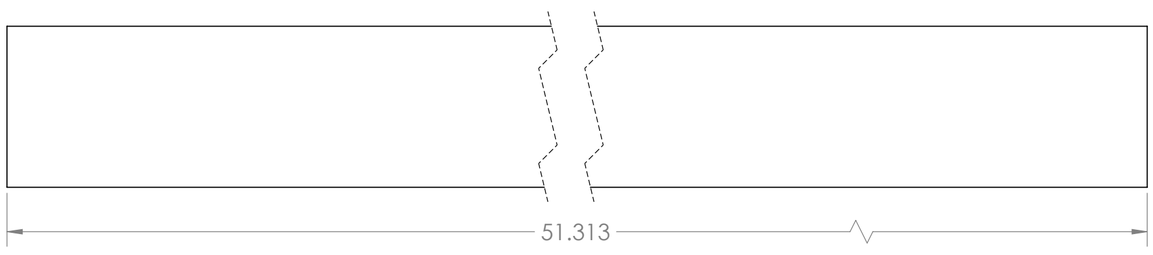

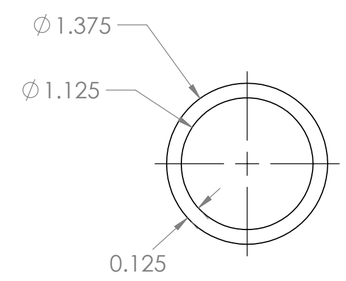

NOTES: (UNLESS OTHERWISE SPECIFIED)

1. DEBURR AND BREAK ALL SHARP EDGES.
2. ALL DIMENSIONS **OD** UNLESS NOTED.

PROPRIETARY AND CONFIDENTIAL
THE INFORMATION CONTAINED IN THIS DRAWING IS THE SOLE PROPERTY OF ASAP METAL FABRICATORS. ANY REPRODUCTION IN PART OR AS A WHOLEWITHOUT THE WRITTEN PERMISSION OF ASAP METAL FABRICATORS IS PROHIBITED.

Part Number: 4A851AE		Customer Rev: -	Date: 6/10/2026
Description: DPP-4483239		Matl:1.375 OD X 0.12 WALL X 1.135	Weight: 0.910 lbs
		Finish:	Drawn By: LM
Customer: XOMETRY		Powdercoat: RAL 7035	Page: 7 of 13
		Alt. Part #: 4A851AE	

315 S 3rd Ave
Yakima, WA 98902
509-453-9143

ITEM NO.	PART NUMBER	DESCRIPTION	QTY.
1	DPP-4483227-001		1

REV.	DESCRIPTION	DATE	APPROVED
-	INITIAL RELEASE	6/10/2026	LM

HRPO - 3/16
.188 TOP
1.575 BOT
SB = .187

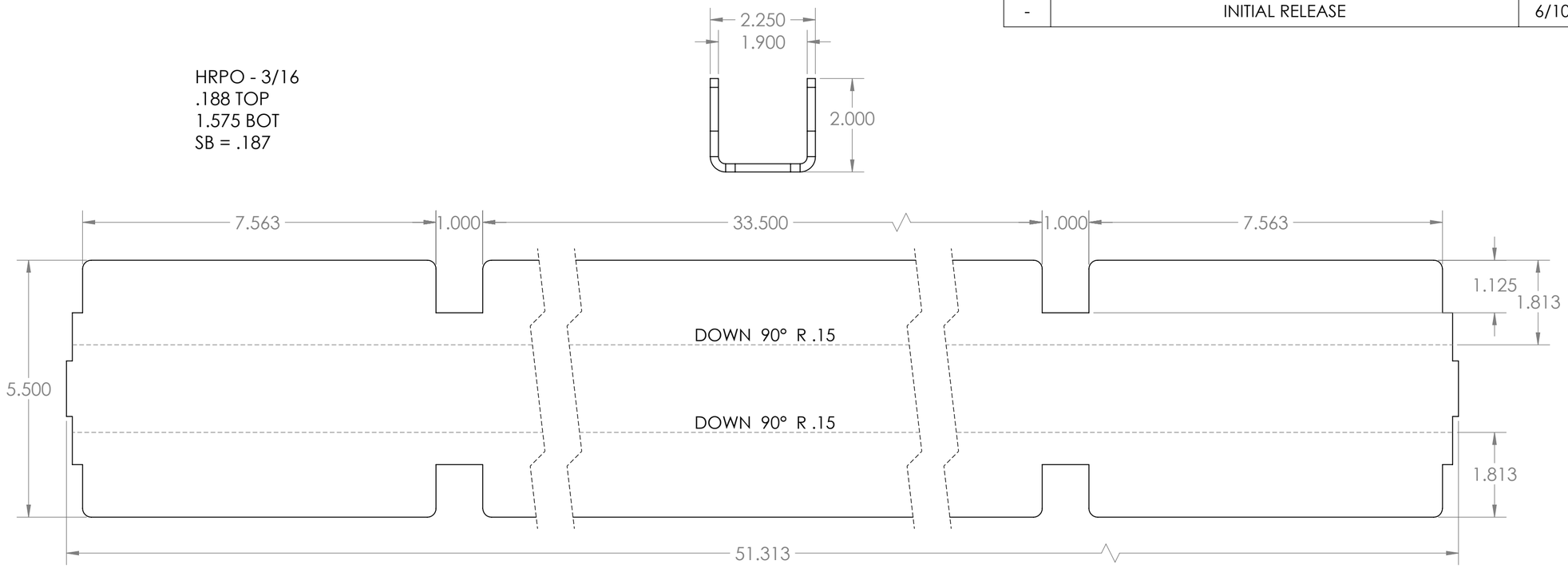

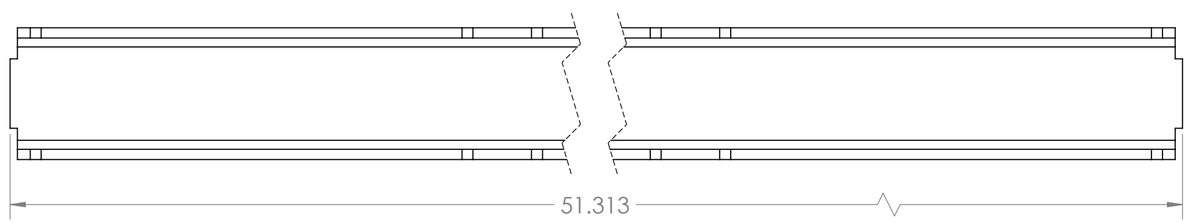

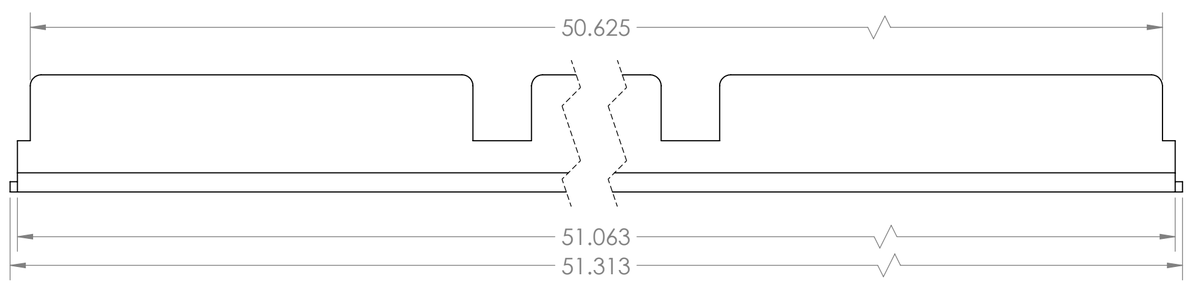

NOTES: (UNLESS OTHERWISE SPECIFIED)

1. DEBURR AND BREAK ALL SHARP EDGES.
2. ALL DIMENSIONS **OD** UNLESS NOTED.

PROPRIETARY AND CONFIDENTIAL
THE INFORMATION CONTAINED IN THIS DRAWING IS THE SOLE PROPERTY OF ASAP METAL FABRICATORS. ANY REPRODUCTION IN PART OR AS A WHOLEWITHOUT THE WRITTEN PERMISSION OF ASAP METAL FABRICATORS IS PROHIBITED.

Part Number: 4A851AE		Customer Rev: -	Date: 6/10/2026
Description: DPP-4483239		Matl: HRPO - 3/16	Weight: 1.805 lbs
		Finish:	Drawn By: LM
Customer: XOMETRY		Powdercoat: RAL 7035	Page: 8 of 13
		Alt. Part #: 4A851AE	

315 S 3rd Ave
Yakima, WA 98902
509-453-9143

ITEM NO.	PART NUMBER	DESCRIPTION	QTY.
1	DPP-4483257		1

REV.	DESCRIPTION	DATE	APPROVED
-	INITIAL RELEASE	6/10/2026	LM

HRPO - 3/16
.188 TOP
1.575 BOT
SB = .187

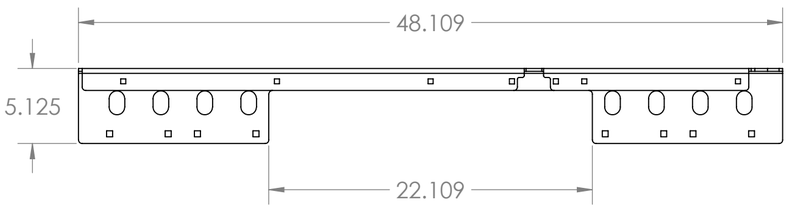

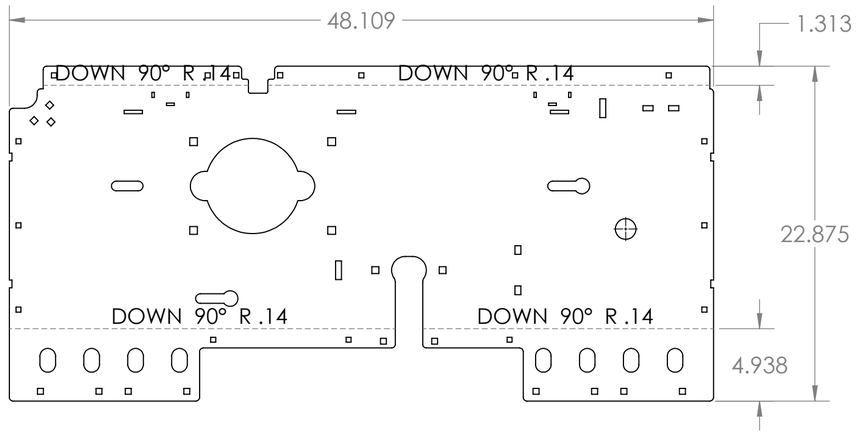

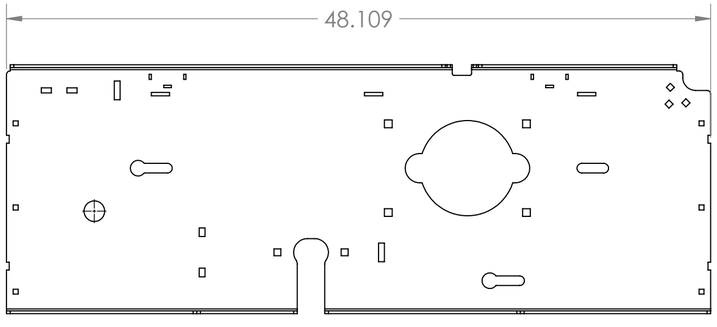

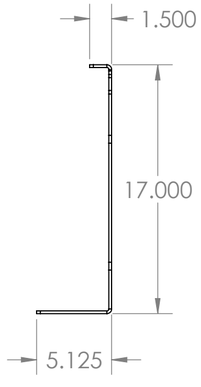

NOTES: (UNLESS OTHERWISE SPECIFIED)

1. DEBURR AND BREAK ALL SHARP EDGES.
2. ALL DIMENSIONS **OD** UNLESS NOTED.

PROPRIETARY AND CONFIDENTIAL
THE INFORMATION CONTAINED IN THIS DRAWING IS THE SOLE PROPERTY OF ASAP METAL FABRICATORS. ANY REPRODUCTION IN PART OR AS A WHOLEWITHOUT THE WRITTEN PERMISSION OF ASAP METAL FABRICATORS IS PROHIBITED.

Part Number: 4A851AE		Customer Rev: -	Date: 6/10/2026
Description: DPP-4483239		Matl: HRPO - 3/16	Weight: 6.380 lbs
		Finish:	Drawn By: LM
		Powdercoat: RAL 7035	Page: 9 of 13
Customer: XOMETRY		Alt. Part #: 4A851AE	

315 S 3rd Ave
Yakima, WA 98902
509-453-9143

ITEM NO.	PART NUMBER	DESCRIPTION	QTY.
1	DPP-4483258		1

REV.	DESCRIPTION	DATE	APPROVED
-	INITIAL RELEASE	6/10/2026	LM

HRPO - 3/16
.188 TOP
1.575 BOT
SB = .187

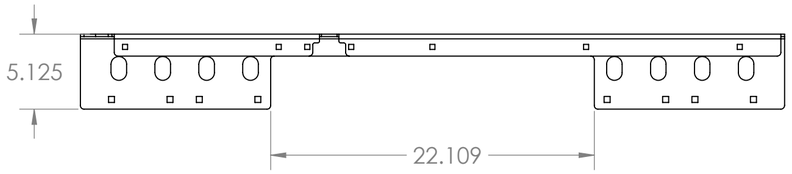

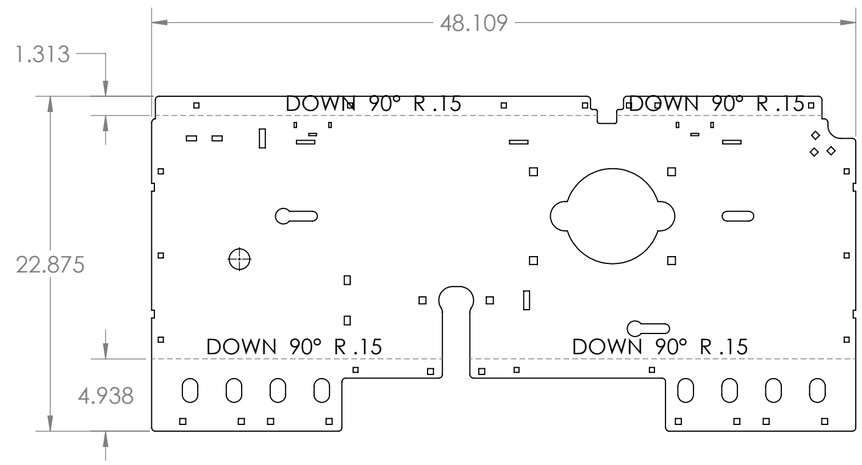

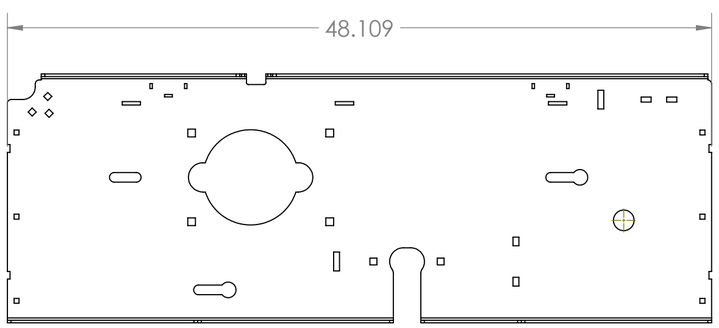

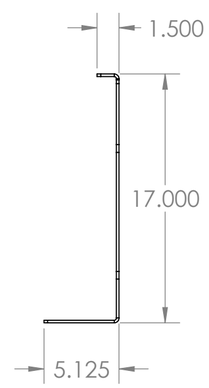

NOTES: (UNLESS OTHERWISE SPECIFIED)

1. DEBURR AND BREAK ALL SHARP EDGES.
2. ALL DIMENSIONS **OD** UNLESS NOTED.

PROPRIETARY AND CONFIDENTIAL
THE INFORMATION CONTAINED IN THIS DRAWING IS THE SOLE PROPERTY OF ASAP METAL FABRICATORS. ANY REPRODUCTION IN PART OR AS A WHOLEWITHOUT THE WRITTEN PERMISSION OF ASAP METAL FABRICATORS IS PROHIBITED.

Part Number: 4A851AE		Customer Rev: -	Date: 6/10/2026
Description: DPP-4483239		Matl: HRPO - 3/16	Weight: 5.960 lbs
		Finish:	Drawn By: LM
		Powdercoat: RAL 7035	Page: 10 of 13
Customer: XOMETRY		Alt. Part #: 4A851AE	

315 S 3rd Ave
Yakima, WA 98902
509-453-9143

ITEM NO.	PART NUMBER	DESCRIPTION	QTY.
1	DPP-4483236-001		1

REV.	DESCRIPTION	DATE	APPROVED
-	INITIAL RELEASE	6/10/2026	LM

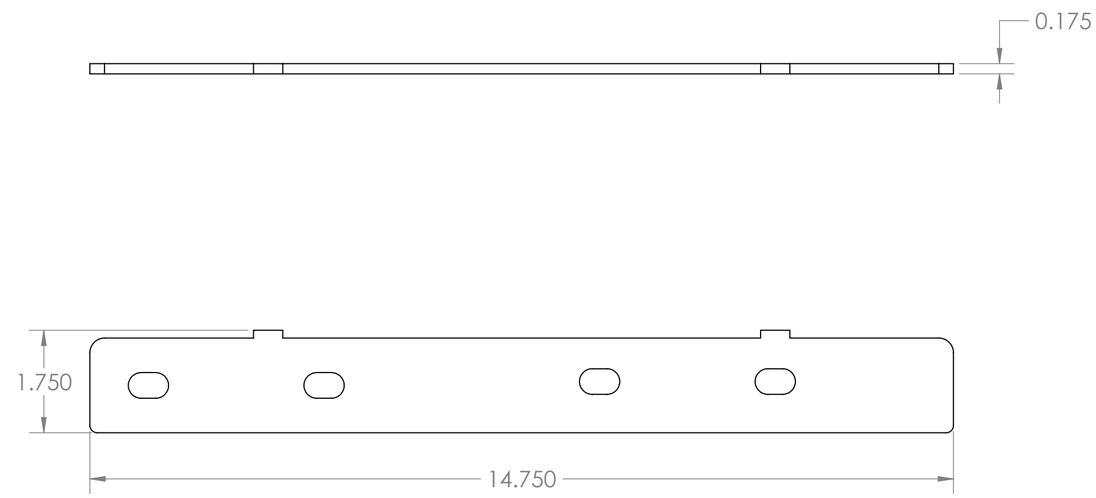

NOTES: (UNLESS OTHERWISE SPECIFIED)

1. DEBURR AND BREAK ALL SHARP EDGES.
2. ALL DIMENSIONS **OD** UNLESS NOTED.

PROPRIETARY AND CONFIDENTIAL
THE INFORMATION CONTAINED IN THIS DRAWING IS THE SOLE PROPERTY OF ASAP METAL FABRICATORS. ANY REPRODUCTION IN PART OR AS A WHOLEWITHOUT THE WRITTEN PERMISSION OF ASAP METAL FABRICATORS IS PROHIBITED.

Part Number: 4A851AE		Customer Rev: -	Date: 6/10/2026
Description: DPP-4483239		Matl:HRPO - 3/16	Weight: 0.145 lbs
		Finish:	Drawn By: LM
Customer: XOMETRY		Powdercoat: RAL 7035	Page: 11 of 13
		Alt. Part #: 4A851AE	

315 S 3rd Ave
Yakima, WA 98902
509-453-9143

ITEM NO.	PART NUMBER	DESCRIPTION	QTY.
1	DPP-4483283-001		1

REV.	DESCRIPTION	DATE	APPROVED
-	INITIAL RELEASE	6/10/2026	LM

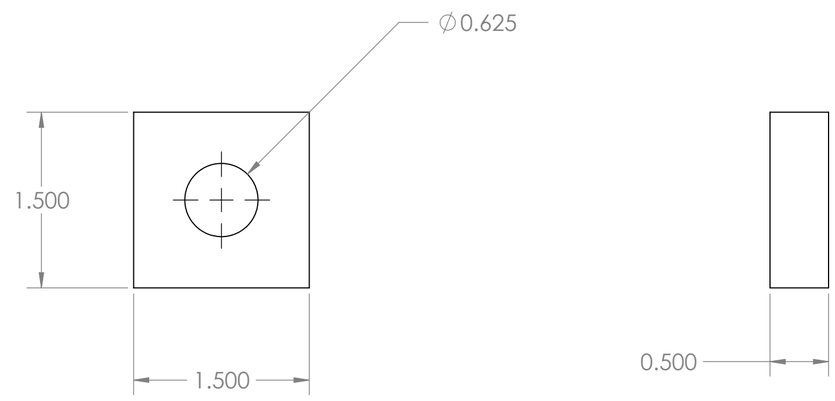

NOTES: (UNLESS OTHERWISE SPECIFIED)

1. DEBURR AND BREAK ALL SHARP EDGES.
2. ALL DIMENSIONS **OD** UNLESS NOTED.

PROPRIETARY AND CONFIDENTIAL
THE INFORMATION CONTAINED IN THIS DRAWING IS THE SOLE PROPERTY OF ASAP METAL FABRICATORS. ANY REPRODUCTION IN PART OR AS A WHOLEWITHOUT THE WRITTEN PERMISSION OF ASAP METAL FABRICATORS IS PROHIBITED.

Part Number: 4A851AE		Customer Rev: -	Date: 6/10/2026
Description: DPP-4483239		Matl: HRPR - 1/2	Weight: 0.035 lbs
		Finish:	Drawn By: LM
Customer: XOMETRY		Powdercoat: RAL 7035	Page: 12 of 13
		Alt. Part #: 4A851AE	

315 S 3rd Ave
Yakima, WA 98902
509-453-9143

ITEM NO.	PART NUMBER	DESCRIPTION	QTY.
1	DPP-4483226-001		1

REV.	DESCRIPTION	DATE	APPROVED
-	INITIAL RELEASE	6/10/2026	LM

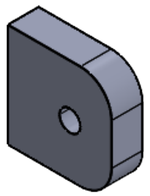

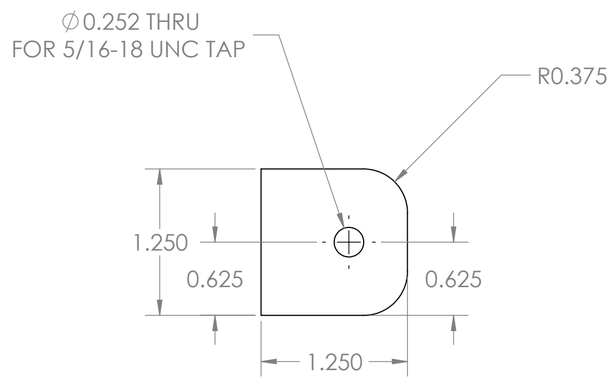

NOTES: (UNLESS OTHERWISE SPECIFIED)

1. DEBURR AND BREAK ALL SHARP EDGES.
2. ALL DIMENSIONS **OD** UNLESS NOTED.

PROPRIETARY AND CONFIDENTIAL
THE INFORMATION CONTAINED IN THIS DRAWING IS THE SOLE PROPERTY OF ASAP METAL FABRICATORS. ANY REPRODUCTION IN PART OR AS A WHOLEWITHOUT THE WRITTEN PERMISSION OF ASAP METAL FABRICATORS IS PROHIBITED.

Part Number: 4A851AE		Customer Rev: -	Date: 6/10/2026
Description: DPP-4483239		Matl: HRPR - 1/2	Weight: 0.020 lbs
		Finish:	Drawn By: LM
Customer: XOMETRY		Powdercoat: RAL 7035	Page: 13 of 13
		Alt. Part #: 4A851AE	

315 S 3rd Ave
Yakima, WA 98902
509-453-9143