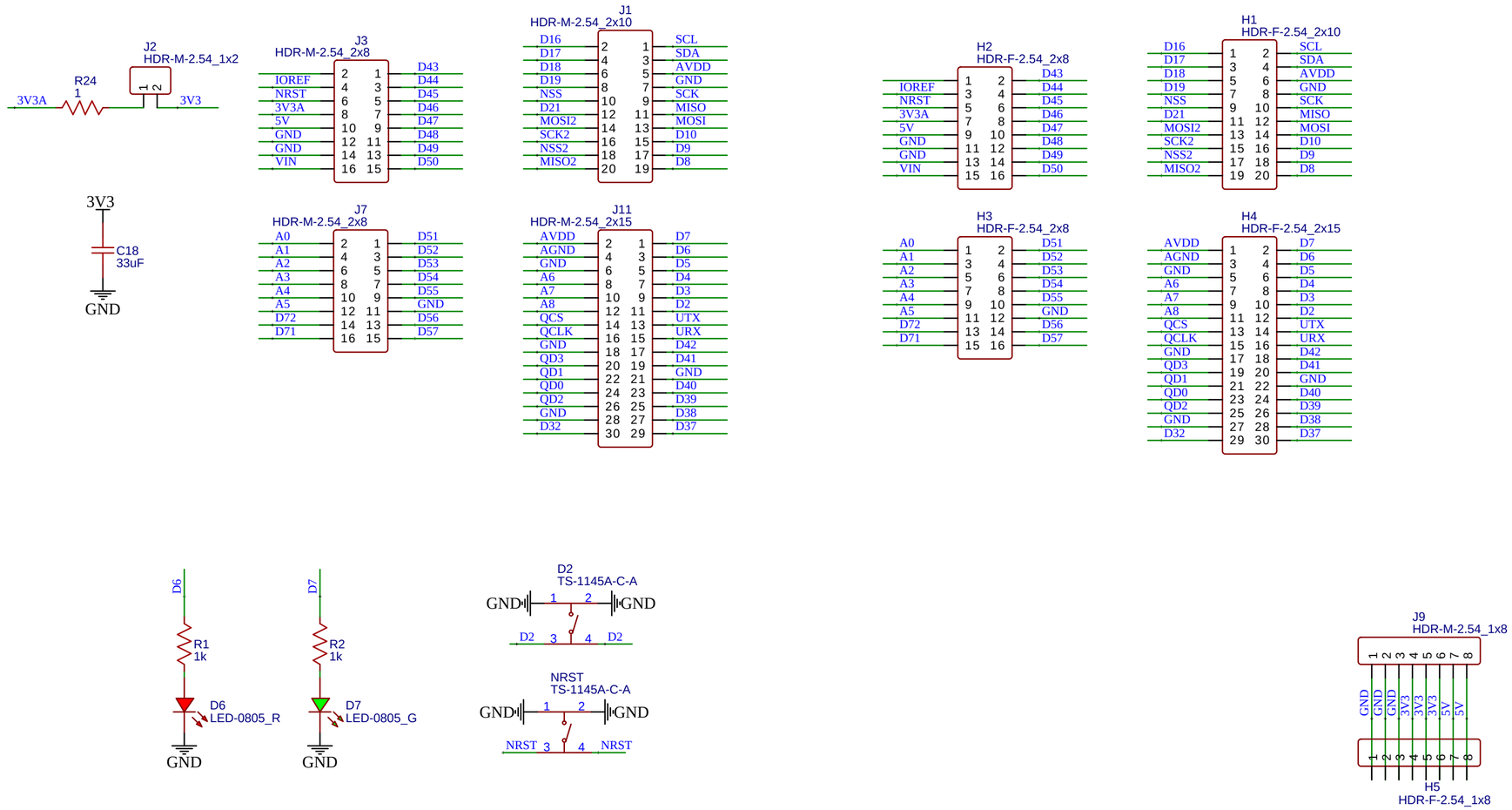

TITLE: Sheet_1		REV: 1.0
嘉立创EDA	Company: Your Company	Sheet: 1/1
	Date: 2022-09-22 Drawn By:	

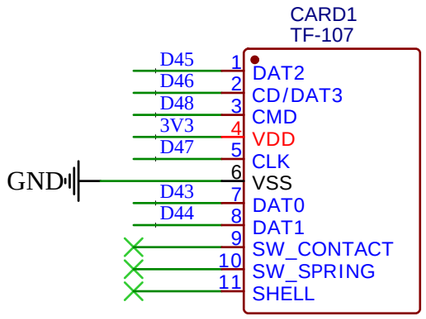

TITLE: Sheet_2		REV: 1.0
嘉立创EDA	Company: Your Company	Sheet: 1/1
	Date: 2022-09-23 Drawn By: minichao	

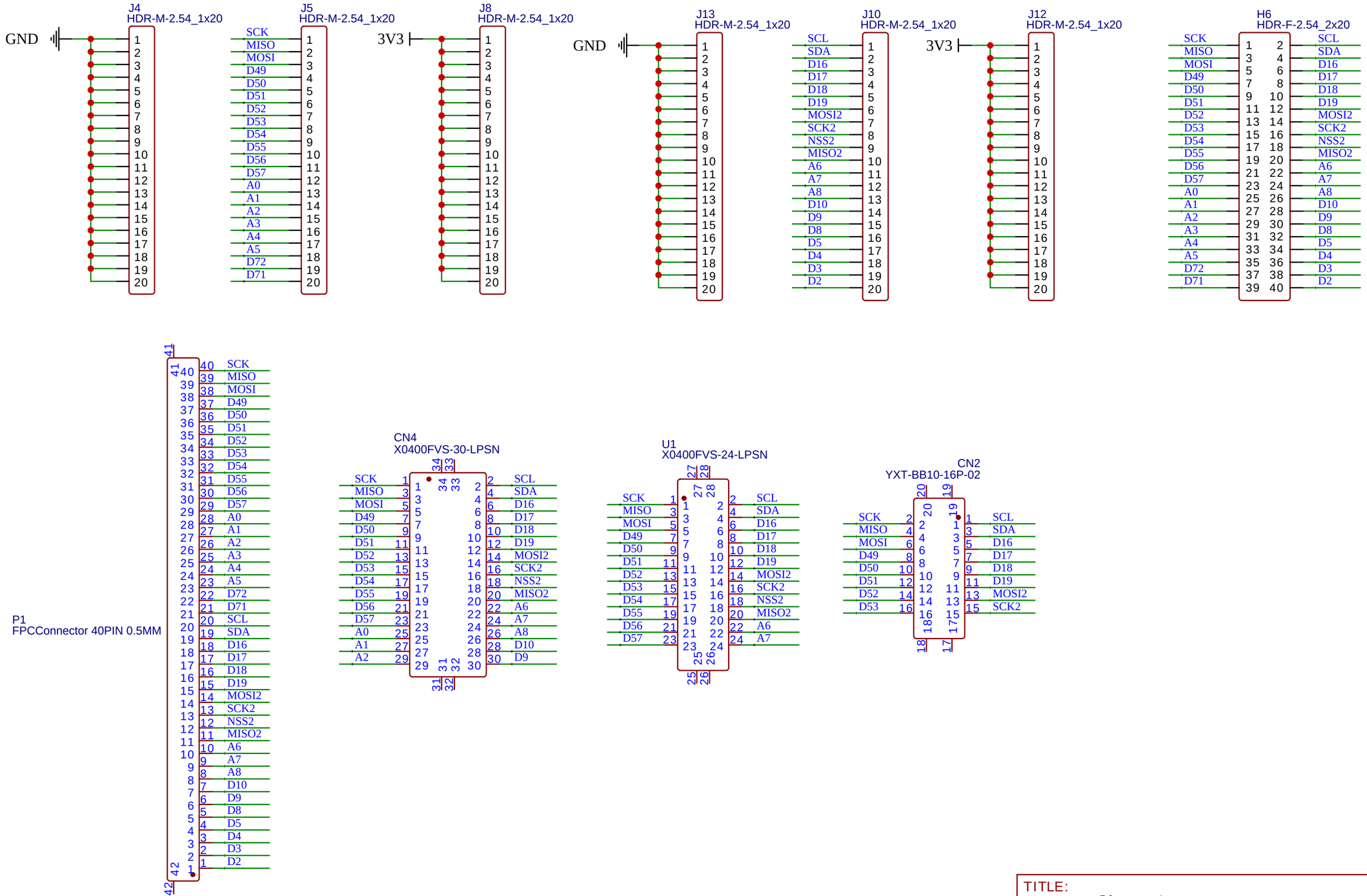

TITLE: Sheet_1		REV: 1.0
嘉立创EDA	Company: Your Company	Sheet: 1/1
	Date: 2022-10-17 Drawn By:	