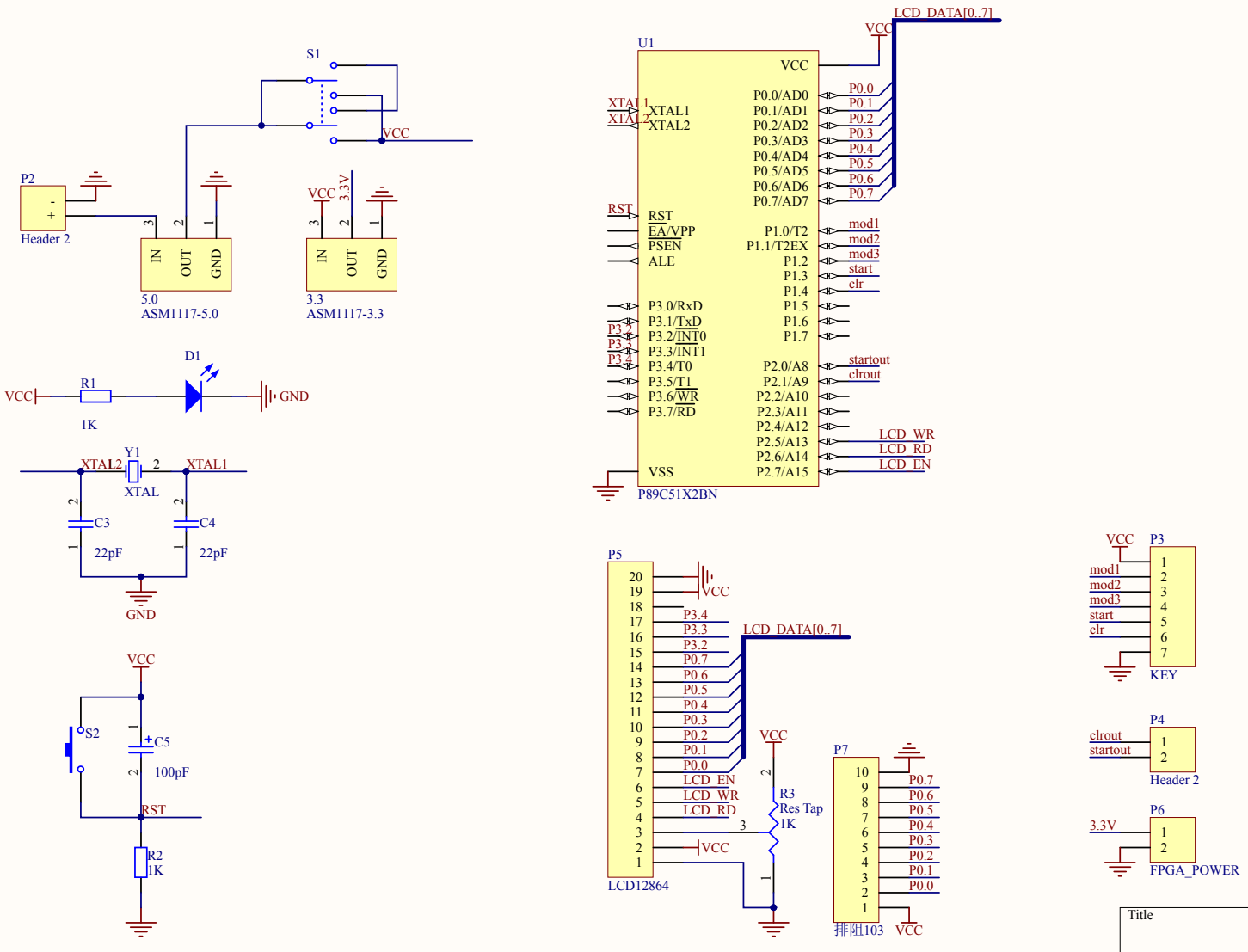

Title		
Size A4	Number	Revision
Date: 8/15/2015		Sheet of
File: D:\Study\..\main.SchDoc		Drawn By: