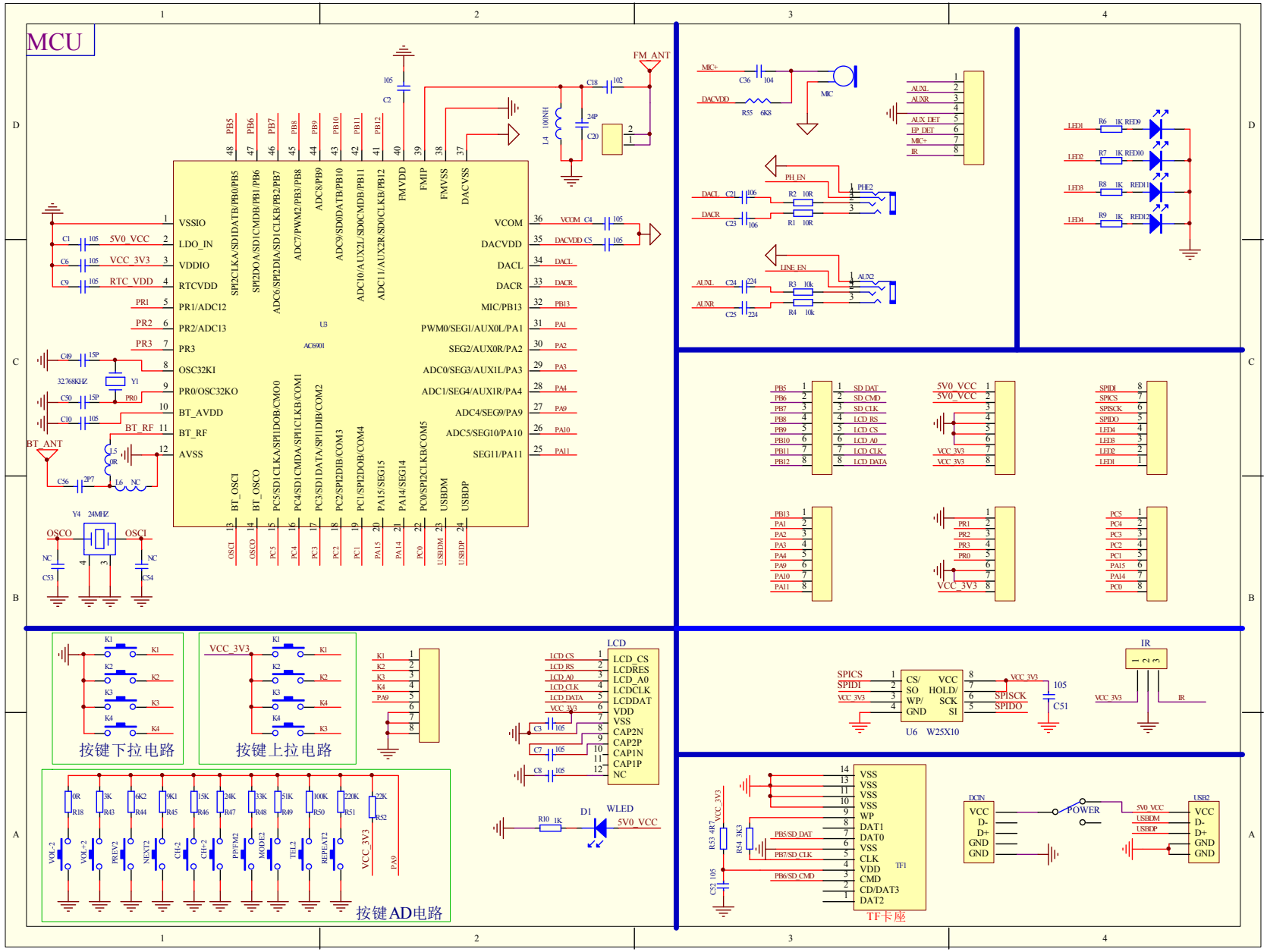
MCU
U3
AC6901
VSSIO
LDO_IN
VDDIO
RTCVDD
PR1/ADC12
PR2/ADC13
PR3
OSC32KI
PR0/OSC32KO
BT_AVDD
BT_RF
AVSS
VCOM
DACVDD
DACL
DACR
MIC/PB13
PWM0/SEG1/AUX0L/PA1
SEG2/AUX0R/PA2
ADC0/SEG3/AUX1L/PA3
ADC1/SEG4/AUX1R/PA4
ADC4/SEG9/PA9
ADC5/SEG10/PA10
SEG11/PA11
FM_ANT
BT_ANT
5V0_VCC
VCC_3V3
RTC_VDD
32.768KHZ
Y1
Y4 24MHZ
OSCO
OSCI
MIC+
DACVDD
MIC
AUXL
AUXR
AUX_DET
EP_DET
IR
PH_EN
LINE_EN
LED1
LED2
LED3
LED4
SD DAT
SD CMD
SD CLK
LCD RS
LCD CS
LCD A0
LCD CLK
LCD DATA
SPIDI
SPICS
SPISCK
SPIDO
PB13
PA1
PA2
PA3
PA4
PA9
PA10
PA11
PC5
PC4
PC3
PC2
PC1
PA15
PA14
PC0
K1
K2
K3
K4
按键下拉电路
按键上拉电路
按键AD电路
LCD
LCD_CS
LCDRES
LCD_A0
LCDCLK
LCDDAT
VDD
VSS
CAP2N
CAP2P
CAP1N
CAP1P
NC
D1
WLED
5V0_VCC
U6 W25X10
CS/
SO
WP/
GND
VCC
HOLD/
SCK
SI
IR
TF卡座
TF1
VSS
WP
DAT1
DAT0
CLK
VDD
CMD
CD/DAT3
DAT2
PB5/SD DAT
PB7/SD CLK
PB6/SD CMD
DCIN
VCC
D-
D+
GND
POWER
USB2
USBDM
USBDP

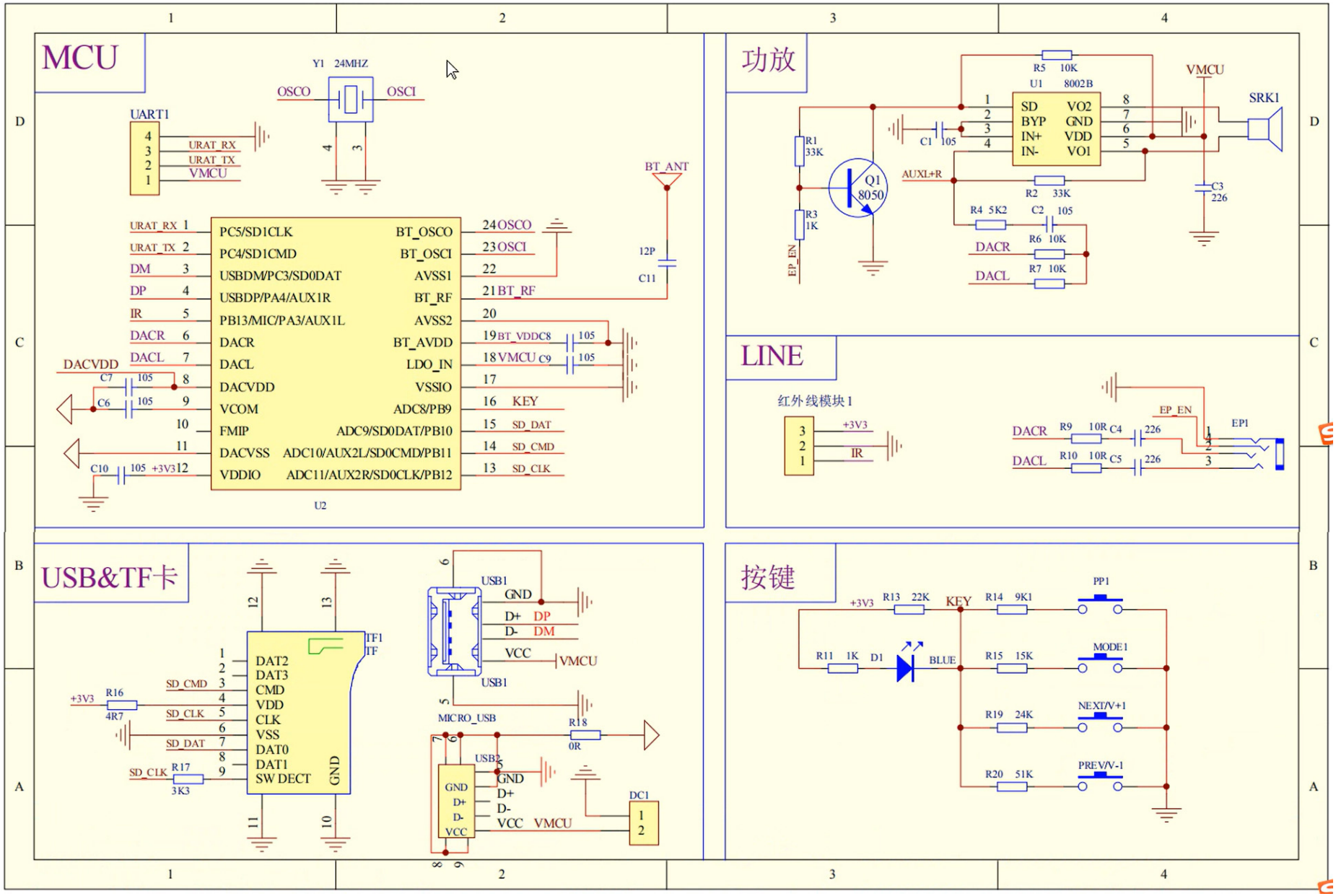
MCU
Y1 24MHZ
OSCO
OSCI
UART1
URAT_RX
URAT_TX
VMCU
BT_ANT
12P
C11
PC5/SD1CLK
PC4/SD1CMD
USBDM/PC3/SD0DAT
USBDP/PA4/AUX1R
PB13/MIC/PA3/AUX1L
DACR
DACL
DACVDD
VCOM
FMIP
DACVSS
VDDIO
BT_OSCO
BT_OSCI
AVSS1
BT_RF
AVSS2
BT_AVDD
LDO_IN
VSSIO
ADC8/PB9
ADC9/SD0DAT/PB10
ADC10/AUX2L/SD0CMD/PB11
ADC11/AUX2R/SD0CLK/PB12
BT_VDDC8
VMCU
KEY
SD_DAT
SD_CMD
SD_CLK
U2
功放
U1 8002B
SD
BYP
IN+
IN-
VO2
GND
VDD
VO1
R5 10K
R1 33K
R3 1K
Q1 8050
EP_EN
C1 105
AUXL+R
R2 33K
R4 5K2
C2 105
R6 10K
R7 10K
C3 226
SRK1
LINE
红外线模块1
+3V3
IR
EP1
R9 10R
R10 10R
C4 226
C5 226
USB&TF卡
TF1
DAT2
DAT3
CMD
VDD
CLK
VSS
DAT0
DAT1
SW DECT
GND
R16 4R7
R17 3K3
USB1
D+ DP
D- DM
VCC
MICRO_USB
R18 0R
USB2
DC1
按键
PP1
MODE1
NEXT/V+1
PREV/V-1
R13 22K
R14 9K1
R15 15K
R19 24K
R20 51K
R11 1K
D1
BLUE