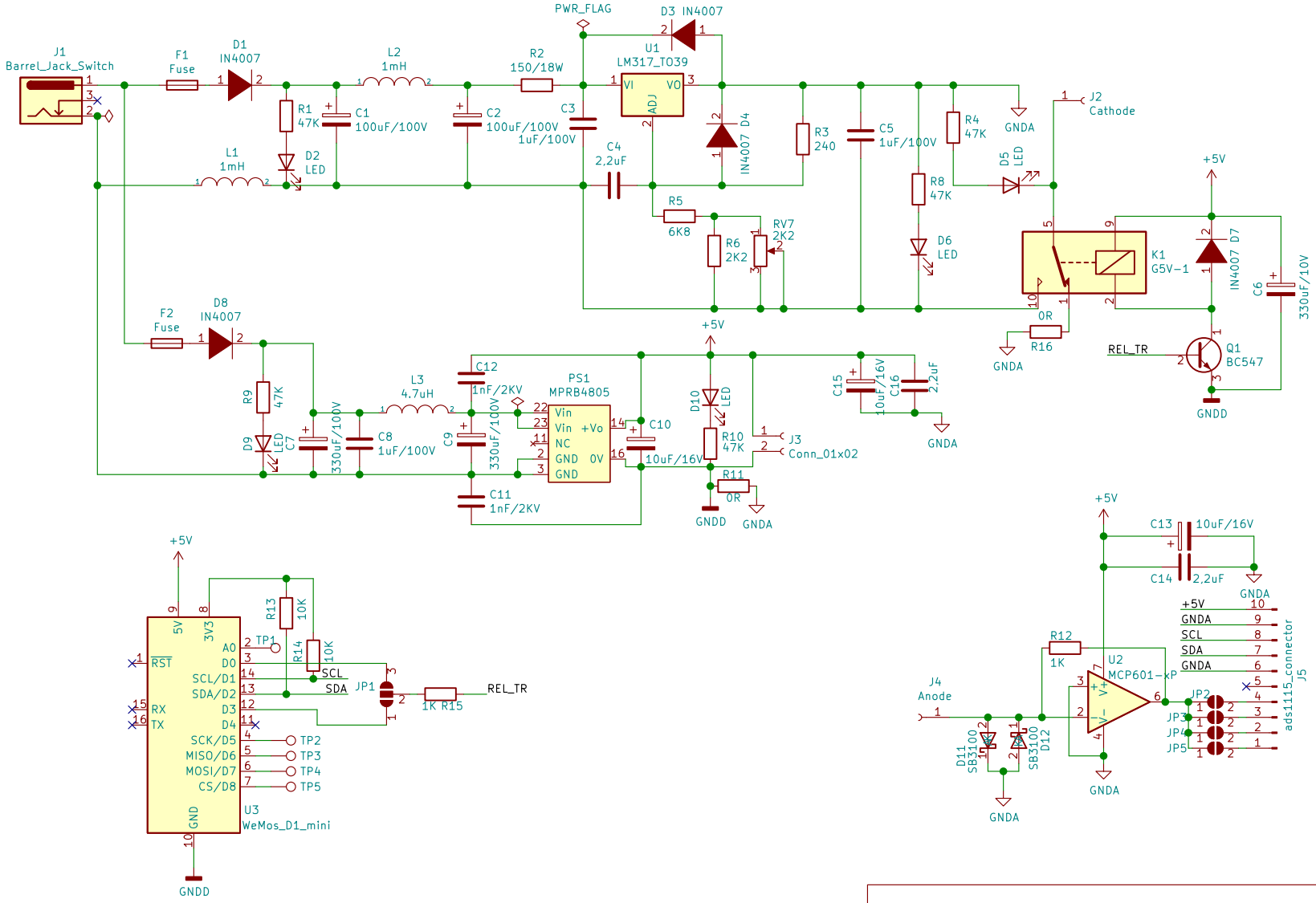

LU KFI LZP-2020/1-0200

Sheet: /

File: Anod_supply.sch

Title:

Size: A4	Date:	**Rev:**
KiCad E.D.A. kicad (5.1.9)-1		Id: 1/1