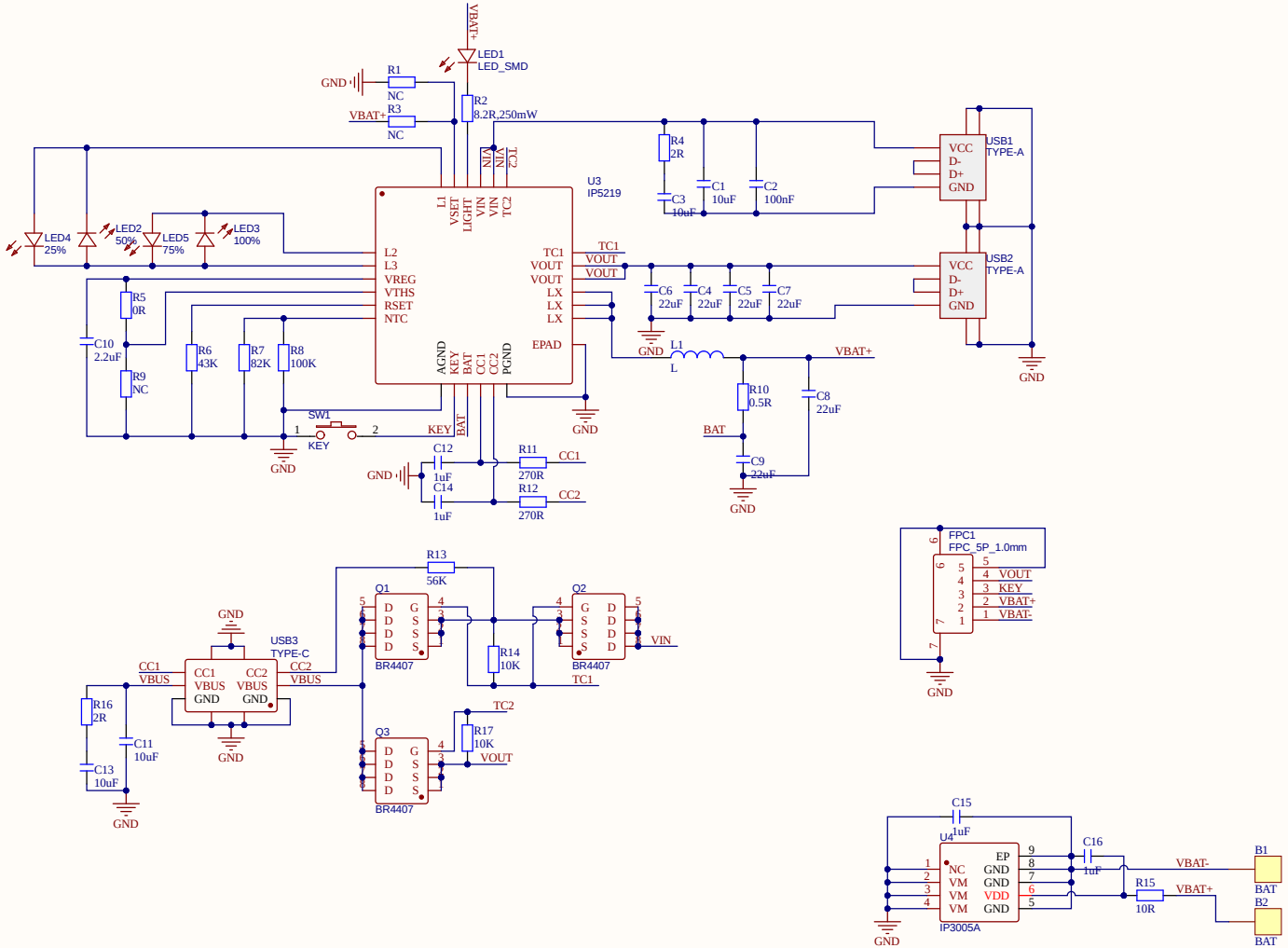

Title		
Size A3	Number	Revision
Date: 3/02/2022	Sheet of	
File: E:\PCB\voice_launch\voice_launch.SchDoc	Drawn By:	