Chemical Engineering Science, 1961, Vol. 16, pp. 242 to 251. Pergamon Press Ltd., London. Printed in Great Britain.

The slow motion of a sphere through a viscous fluid towards a plane surface

HOWARD BRENNER
Department of Chemical Engineering, New York University, New York 53, New York

(*Received* 31 *January* 1961)

Abstract—Bipolar co-ordinates are employed to obtain " exact " solutions of the equations of slow, viscous flow for the steady motion of a solid sphere towards or away from a plane surface of infinite extent. Two cases are considered: (i) the plane surface is rigid and fluid adheres to its surface ; (ii) the plane is a free surface on which the tangential stresses vanish. Deformation of the surface in the latter case is neglected. Numerical results are provided for the corrections to Stokes' law necessitated by the presence of the plane boundary at a finite distance from the particle. Application of the results to end-effect correlations in the falling-ball viscometer are discussed.

Résumé—Des coordonnées bipolaires sont utilisées pour obtenir des solutions " exactes " des équations relatives à l'écoulement lent et visqueux d'une sphére solide en mouvement uniforme au voisinage ou à distance d'une surface plane infinie. Deux cas sont considérés : (1) La surface plane est rigide et le fluide y adhère ; (II) elle est libre et les forces tangentielles disparaissent. On néglige dans ce dernier cas la déformation de la surface. Des résultats numériques sont donnés pour les corrections de la loi de Stokes nécessitées par la présence d'un plan de séparation à une distance finie de la particule. Suit une discussion de l'application des résultats aux relations donnant l'effect des extrémités dans les viscosimètres à chute de bille.

Zusammenfassung—Mit Polarkoordinaten werden " exakte " Lösengun der Gleichungen für langsames viskoses Fliessen für die stationäre Bewegung einer festen Kugel gegen eine ebene, unendlich grosse Oberfläche, oder von ihr hinweg, erhalten. Es werden zwei Fälle betrachtet: (I) Die ebene Oberfläche ist fest und mit Flüssigkeit behaftet ; (II) Es liegt eine freie Oberfläche vor, in der die Tangentialspannungen verschwinden. In diesem Fall wird die Verformung der Oberfläche vernachlässigy. Numerische Ergebnisse werden angegeben zur Korrektur des Stokes'schen Gesetzes, die infolge der Gegenwart einer ebenen Grenzfläche in endlicher Entfernung von dem Teilchen notwendig ist. Die Anwendung der Ergebnisse zur Korrektur von Endeffekten im Kugelviskosimeter wird diskutiert.

INTRODUCTION

STOKES' law, for the resistance of a sphere moving slowly through a viscous liquid, finds wide application in the interpretation of low Reynolds number sedimentation phenomena. This well-known relation applies only to fluid media which extend to infinity in all directions. In most real situations, however, the fluid is externally bounded by rigid walls and/or a free surface. The presence of these boundaries at finite distances from the particle necessitate corrections to Stokes' resistance formula.

The case in which a sphere falls along the axis of an infinitely long circular cylinder has been elaborated in great detail by many authors, most notably by HABERMAN and SAYRE [1]. Investigations of this nature emphasize corrections arising from the fact that the fluid is *laterally* bounded. They do not, however, provide insight into the equally interesting case where the fluid is bounded *longitudinally*, that is, perpendicular to the direction of motion of the particle.

In this context we propose to investigate the motion of a spherical particle towards or away from a single plane surface in an otherwise unlimited fluid. Two distinct cases are of interest: (i) the plane surface is rigid as, for example, when it constitutes the bottom of the container in which the particle falls ; (ii) the plane is a free surface as, for example, when it corresponds to the interface between a liquid and the atmosphere.

The rigid wall case has been treated by LORENTZ

[2] for the situation in which the sphere radius, b, is small compared to the instantaneous distance, h, of its midpoint from the plane. He finds that the resistance of the particle is greater than would be predicted by Stokes' law by the amount

$$1 + \frac{9}{8}\left(\frac{b}{h}\right) + 0\left[\left(\frac{b}{h}\right)^2\right]$$

It is our intention to provide " exact " solutions of these problems, unrestricted with regard to the ratio b/h.

1. Equations of Motion

We consider here the problem of a solid sphere of radius b moving with constant velocity U towards a plane surface, $z = 0$. The instantaneous distance of the sphere centre from the plane is denoted by h, as depicted in Fig. 1. The origin of co-ordinates, O, is located at the point of intersection of the sphere axis with the plane. Attention is confined to the semi-infinite domain, $z \geqslant 0$.

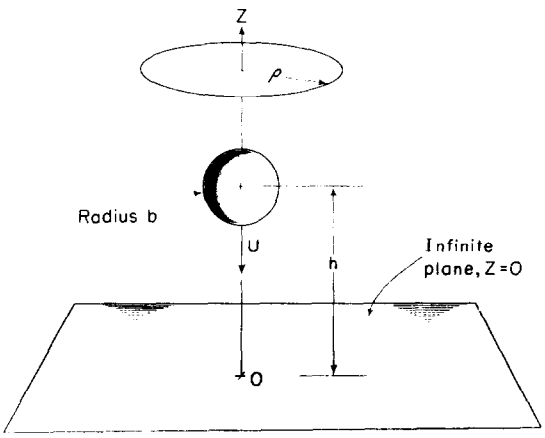

Fig. 1. Schematic sketch.

The fluid motion is, in general, governed by the Stokes–Navier equations,

$$\frac{\partial \mathbf{v}}{\partial t} + \mathbf{v} \cdot \nabla \mathbf{v} + \frac{1}{\rho} \nabla p = \nu \nabla^2 \mathbf{v}$$

and continuity equation,

$$\nabla \cdot \mathbf{v} = 0$$

for incompressible fluids. For sufficiently " slow " motions it is permissible to neglect the quadratic term $\mathbf{v} \cdot \nabla \mathbf{v}$ in comparison to the viscous term, $\nu \nabla^2 \mathbf{v}$. This can be rigorously justified for sufficiently small values of the particle Reynolds number, bU/ν.

The fluid motion is inherently unsteady, since the distance separating the particle from the bounding plane continually changes. However, as is easily established, the time-dependent term in the equations of motion, $\partial \mathbf{v}/\partial t$, becomes negligibly small by comparison to the viscous term for sufficiently small values of the dimensionless group $Ub^2/\nu h$.

Thus, whenever these two dimensionless criteria are met, the equations of motion are of the form

$$\nabla p = \kappa \nabla^2 \mathbf{v}$$

where κ is the fluid viscosity. These are the so-called creeping motion equations. They are to be considered simultaneously with the continuity equation.

Related problems dealing with the slow rotation of two spheres perpendicular to their line of centres [3, 4] and the slow translation of two spheres parallel to their line of centres [5] have been solved exactly in bipolar co-ordinates.

Because the motion is axisymmetrical, the present problem is most readily treated by means of Stokes' stream-function, ψ. In terms of this function the velocity components in cylindrical co-ordinates $[\rho, z]$ are

$$v_\rho = \frac{1}{\rho}\frac{\partial \psi}{\partial z}, \; v_z = -\frac{1}{\rho}\frac{\partial \psi}{\partial \rho}. \tag{1.1}$$

Neglecting the effects of fluid inertia and the time derivatives of velocity, the differential equation satisfied by the stream-function is [6]

$$\Phi^4(\psi) = 0, \tag{1.2}$$

where the differential operator Φ^2 has the following form in cylindrical co-ordinates:

$$\Phi^2 = \frac{\partial^2}{\partial z^2} + \rho \frac{\partial}{\partial \rho}\left(\frac{\partial}{\rho \, \partial \rho}\right). \tag{1.3}$$

For the class of problems at hand we describe the fluid motion in bipolar co-ordinates. The bipolar co-ordinates (ξ, η) of a point in a meridian

plane are defined by the conformal transformation [6]

$$z + i\rho = ic \cot \tfrac{1}{2}(\eta + i\xi),$$

or, equivalently, [7]

$$\xi + i\eta = \ln \frac{\rho + i(z + c)}{\rho + i(z - c)},$$

where c is a positive constant. In the present application it is only necessary to consider the situation for which $z \geqslant 0$ and $\rho \geqslant 0$, corresponding to the range of values $\infty > \xi \geqslant 0$, $\pi \geqslant \eta \geqslant 0$. On the basis of the foregoing we find

$$\rho = c \frac{\sin \eta}{\cosh \xi - \cos \eta}, \; z = c \frac{\sinh \xi}{\cosh \xi - \cos \eta}, \quad (1.4)$$

and thus

$$(z - c \coth \xi)^2 + \rho^2 = (c \operatorname{cosech} \xi)^2,$$

$$z^2 + (\rho - c \cot \eta)^2 = (c \operatorname{cosec} \eta)^2.$$

The surfaces evolved by rotating the curves $\xi =$ constant in the ρ, z plane about the z-axis are therefore a family of spheres of radii $c \operatorname{cosech} \xi$ whose centres lie along the z-axis at the points ($\rho = 0$, $z = c \coth \xi$). When $\xi = 0$ the sphere degenerates into the plane $z = 0$.

If we denote by $\xi = \alpha > 0$ the solid sphere of radius b on which we ultimately wish to satisfy the boundary conditions, then

$$b = c \operatorname{cosech} \alpha.$$

Furthermore, since the centre of this sphere lies at a distance h from the plane $z = 0$, then

$$h = c \coth \alpha.$$

Solving these simultaneously we obtain

$$\alpha = \cosh^{-1}\left(\frac{h}{b}\right) = \ln\left\{\frac{h}{b} + \sqrt{\left[\left(\frac{h}{b}\right)^2 - 1\right]}\right\}, \quad (1.5)$$

and

$$c = b \sinh \alpha. \quad (1.6)$$

A solution of (1.2) in bipolar co-ordinates, suitable for satisfying boundary conditions on the sphere and plane, has been given by STIMSON and JEFFERY [5]. With slight modifications their solution is

$$(\cosh \xi - \mu)^{3/2} \psi = \sum_{n=0}^{\infty} U_n(\xi)\, C_{n+1}^{-1/2}(\mu), \quad (1.7)$$

where for brevity we have put

$$\mu = \cos \eta. \quad (1.8)$$

Here,

$$U_n(\xi) = a_n \cosh(n - \tfrac{1}{2})\xi + b_n \sinh(n - \tfrac{1}{2})\xi + c_n \cosh(n + \tfrac{3}{2})\xi + d_n \sinh(n + \tfrac{3}{2})\xi, \quad (1.9)$$

and $C_{n+1}^{-1/2}(\mu)$ is the Gegenbauer polynomial of order $n + 1$ and degree $-\frac{1}{2}$. These latter functions are related to Legendre polynomials via the relation

$$C_n^{-1/2}(\mu) = \frac{P_{n-2}(\mu) - P_n(\mu)}{2n - 1}$$

The constants a_n, b_n, ... are to be determined from the boundary conditions.

As shown by STIMSON and JEFFERY, the frictional force, F, in the positive z direction, opposing the motion of the sphere is

$$F = \frac{2\pi\kappa\sqrt{(2)}}{b \sinh \alpha} \sum_{n=1}^{\infty} (a_n + b_n + c_n + d_n), \quad (1.10)$$

where κ is the viscosity.

In the subsequent development we shall require an expansion of the term $(\cosh \xi - \mu)^{3/2} \rho^2$ having the same general form as the right-hand side of (1.7). Upon combining (1.4), (1.6) and (1.8), there is obtained

$$\frac{(\cosh \xi - \mu)^{3/2} \rho^2}{b^2 \sinh^2 \alpha} = (1 - \mu^2)(\cosh \xi - \mu)^{-1/2}.$$

But

$$\cosh \xi = \tfrac{1}{2}[\exp(\xi) + \exp(-\xi)],$$

so that

$$(\cosh \xi - \mu)^{-1/2} = \sqrt{(2)} \exp(\tfrac{1}{2}\xi) \times \times [1 - 2\exp(\xi)\mu + \exp(2\xi)]^{-1/2}$$

If, in the potential expansion

$$(r_1^2 - 2 r_1 r_2 \mu + r_2^2)^{-1/2} = \sum_{k=0}^{\infty} P_k(\mu) \frac{r_1^k}{r_2^{k+1}},$$

valid for $r_2 > r_1$, we put $r_1 = 1$ and $r_2 = \exp(\xi)$ ($\xi > 0$), then

$$(\cosh \xi - \mu)^{-1/2} = \sqrt{(2)} \sum_{k=0}^{\infty} P_k(\mu) \exp[-(k + \tfrac{1}{2})\xi].$$

However,

$$(2k + 1)(1 - \mu^2) P_k(\mu) = (k + 1)(k + 2) C_{k+2}^{-1/2}(\mu) - k(k - 1) C_k^{-1/2}(\mu),$$

from which we find, by appropriately altering the summation indices,

$$(\cosh \xi - \mu)^{3/2} \rho^2 = \sqrt{(2)}\, b^2 \sinh^2 \alpha \sum_{n=1}^{\infty} n\,(n+1) \left\{\frac{\exp\left[-(n-\tfrac{1}{2})\,\xi\right]}{2n-1} - \frac{\exp\left[-(n+\tfrac{3}{2})\,\xi\right]}{2n+3}\right\} C_{n+1}^{-1/2}(\mu) \quad (1.11)$$

which is in the desired form.

2. Solid Plane Surface

Here and in the sequel the fluid motion is referred to a co-ordinate system at rest with respect to the plane. On the hypothesis of no relative motion at fluid solid interfaces the boundary conditions on the surface of the sphere, $\xi = \alpha$, are

$$v_\rho = 0, \quad v_z = -U. \quad (2.1)$$

Again, the boundary conditions at the *solid* plane surface, $\xi = 0$, are

$$v_\rho = 0, \quad v_z = 0. \quad (2.2)$$

These can be expressed in terms of the stream function in the following way: By the chain-rule

$$\frac{\partial \psi}{\partial \eta} = \frac{\partial \psi}{\partial z}\frac{\partial z}{\partial \eta} + \frac{\partial \psi}{\partial \rho}\frac{\partial \rho}{\partial \eta} = \rho\, v_\rho \frac{\partial z}{\partial \eta} - \rho\, v_z \frac{\partial \rho}{\partial \eta}, \quad (2.3)$$

and

$$\frac{\partial \psi}{\partial \xi} = \rho\, v_\rho \frac{\partial z}{\partial \xi} - \rho\, v_z \frac{\partial \rho}{\partial \xi}. \quad (2.4)$$

Thus, on the sphere surface,

$$\left[\frac{\partial \psi}{\partial \eta}\right]_{\xi=\alpha} = \left[\frac{\partial}{\partial \eta}\tfrac{1}{2} U \rho^2\right]_{\xi=\alpha} \quad (2.5)$$

and

$$\left\{\frac{\partial \psi}{\partial \xi}\right\}_{\xi=\alpha} = \left[\frac{\partial}{\partial \xi}\tfrac{1}{2} U \rho^2\right]_{\xi=\alpha}. \quad (2.6)$$

Since η and ξ are orthogonal the former of these two conditions is satisfied by

$$[\psi]_{\xi=\alpha} = [\tfrac{1}{2} U \rho^2]_{\xi=\alpha} \quad (2.7)$$

As can be verified by direct differentiation the following is entirely equivalent to (2.6) and (2.7):

$$\left[(\cosh \xi - \mu)^{3/2} \psi\right]_{\xi=\alpha} = \left[\tfrac{1}{2} U (\cosh \xi - \mu)^{3/2} \rho^2\right]_{\xi=\alpha}, \quad (2.8)$$

and

$$\left[\frac{\partial \xi}{\partial}(\cosh \xi - \mu)^{3/2} \psi\right]_{\xi=\alpha} = \left[\frac{\partial}{\partial \xi}\tfrac{1}{2} U (\cosh \xi - \mu)^{3/2} \rho^2\right]_{\xi=\alpha}. \quad (2.9)$$

In analogous fashion the evanescence of velocity at the solid plane wall leads us to the boundary conditions

$$\left[(\cosh \xi - \mu)^{3/2} \psi\right]_{\xi=0} = 0 \quad (2.10)$$

and

$$\left[\frac{\partial}{\partial \xi}(\cosh \xi - \mu)^{3/2} \psi\right]_{\xi=0} = 0. \quad (2.11)$$

The conditions (2.8)–(2.11), in conjunction with (1.7) and (1.11) lead to the following four simultaneous equations to determine the constants $a_n, b_n, \ldots\ldots$:

$$a_n \cosh (n-\tfrac{1}{2})\,\alpha + b_n \sinh (n-\tfrac{1}{2})\,\alpha + c_n \cosh (n+\tfrac{3}{2})\,\alpha + d_n \sinh (n+\tfrac{3}{2})\,\alpha = \frac{b^2 \sinh^2 \alpha\, U\, n\,(n+1)}{\sqrt{(2)}} \left\{\frac{\exp\left[-(n-\tfrac{1}{2})\,\alpha\right]}{2n-1} - \frac{\exp\left[-(n+\tfrac{3}{2})\,\alpha\right]}{2n+3}\right\}, \quad (2.12)$$

$$(n-\tfrac{1}{2})\left[a_n \sinh (n-\tfrac{1}{2})\,\alpha + b_n \cosh (n-\tfrac{1}{2})\,\alpha\right] + (n+\tfrac{3}{2})\left[c_n \sinh (n+\tfrac{3}{2})\,\alpha + d_n \cosh (n+\tfrac{3}{2})\,\alpha\right] = -\frac{b^2 \sinh^2 \alpha\, U\, n\,(n+1)}{2\sqrt{(2)}} \left\{\exp\left[-(n-\tfrac{1}{2})\alpha\right] - \exp\left[-(n+\tfrac{3}{2})\,\alpha\right]\right\}, \quad (2.13)$$

$$a_n + c_n = 0, \quad (2.14)$$

and

$$(n-\tfrac{1}{2})\, b_n + (n+\tfrac{3}{2})\, d_n = 0. \quad (2.15)$$

The solution of this set of equations is

$$c_n = -a_n = \frac{b^2 \sinh^4 \alpha\, U\, n\,(n+1)\,(2n+1)}{\sqrt{(2)}\left[4\sinh^2(n+\tfrac{1}{2})\,\alpha - (2n+1)^2 \sinh^2 \alpha\right]}, \quad (2.16)$$

and

$$d_n = -\frac{(2n-1)}{(2n+3)} b_n = -\frac{b^2 \sinh^2 \alpha\, U n\,(n+1)}{\sqrt{(2)}\,(2n+3)} \left[\frac{2\sinh(2n+1)\,\alpha + (2n+1)\sinh 2\alpha}{4\sinh^2(n+\tfrac{1}{2})\,\alpha - (2n+1)^2 \sinh^2 \alpha} - 1\right] \quad (2.17)$$

If we denote by λ the correction which must be applied to Stokes' law as a result of the presence of the solid wall then

$$F = 6\,\pi\,\kappa\,bU\,\lambda, \tag{2.18}$$

and from (1.10)

$$\lambda = \frac{4}{3}\sinh\alpha \sum_{n=1}^{\infty} \frac{n\,(n+1)}{(2n-1)\,(2n+3)} \left[\frac{2\sinh(2n+1)\,\alpha + (2n+1)\sinh 2\,\alpha}{4\sinh^2(n+\frac{1}{2})\,\alpha - (2n+1)^2\sinh^2\alpha} - 1\right] \tag{2.19}$$

where the parameter α is given in terms of the ratio of sphere radius, b, to the distance of its centre from the plane, h, in equation (1.5). This formula is virtually identical to a similar expression given by STIMSON and JEFFERY [5] for the Stokes' law correction in the case of two equal size spheres falling parallel to their line of centres, except that the lead term in brackets is inverted. Incidentally, as pointed out by FAXÉN [8], there is a typographical error in their manuscript and the multiplier of their expression for λ should be $\frac{4}{3}$ rather than $\frac{2}{3}$.

Using tabulated values of the exponential and hyperbolic functions [9, 10, 11], we have made accurate calculations of λ for values of b/h in the range of interest. These are presented in Table 1.

Table 1. *Stokes' Law corrections for a solid plane, equation* (2.19)

α	h/b	b/h	λ
0	1	1	∞
0·5	1·1276260	0·88681885	9·2517663
1·0	1·5430806	0·64805428	3·0360641
1·5	2·3524096	0·42509603	1·8374749
2·0	3·7621957	0·26580222	1·4128629
2·5	6·1322895	0·16307123	1·2219882
3·0	10·067662	0·099327927	1·1252465
∞	∞	0	1

When the sphere is far removed from the wall it is sufficient to retain only the first term in (2.19) and to neglect $\exp(-\alpha)$ compared to $\exp(\alpha)$. This results in

$$\lambda \simeq 1 + \frac{9}{8}\frac{b}{h}$$

for small b/h, which agrees exactly with the value given by LORENTZ [2] obtained by the method of "reflexions."

3. FREE SURFACE

When the plane, $z = 0$, towards which the sphere falls is a free surface the boundary conditions on the plane are that the normal component of velocity and the tangential stresses vanish:

$$[v_z]_{z=0} = 0, \tag{3.1}$$

and

$$[\widehat{z\,\rho}]_{z=0} = \kappa\left(\frac{\partial\,v_\rho}{\partial\,z} + \frac{\partial\,v_z}{\partial\,\rho}\right)_{z=0} = 0$$

$$[\widehat{z\,\phi}]_{z=0} = \kappa\left(\frac{\partial\,v_\phi}{\partial\,z} + \frac{1}{\rho}\frac{\partial\,v_z}{\partial\,\phi}\right)_{z=0} = 0.$$

The latter equation is automatically satisfied by virtue of the prevailing symmetry. Furthermore, in view of (3.1) the vanishing of the first stress component is assured by setting

$$\left(\frac{\partial\,v_\rho}{\partial\,z}\right)_{z=0} = 0. \tag{3.2}$$

Now,

$$v_z = -\frac{1}{\rho}\frac{\partial\,\psi}{\partial\,\rho} = -\frac{1}{\rho}\left(\frac{\partial\,\psi}{\partial\,\xi}\frac{\partial\,\xi}{\partial\,\rho} + \frac{\partial\,\psi}{\partial\,\eta}\frac{\partial\,\eta}{\partial\,\rho}\right).$$

Since $\xi = 0$ along the plane $z = 0$ then the derivative $\partial\,\xi/\partial\,\rho$ vanishes on this plane and the condition (3.1) is met by $(\partial\,\psi/\partial\,\eta)_{\xi=0} = 0$ or, since ξ and η are orthogonal,

$$(\psi)_{\xi=0} = 0. \tag{3.3}$$

In regard to (3.2) we have from (1.1) that an equivalent condition imposed on the stream function is

$$\left(\frac{\partial^2\,\psi}{\partial\,z^2}\right)_{z=0} = 0$$

But, with the aid of (3.3) and the relation

$$\frac{\partial^2}{\partial\,z^2} + \frac{\partial^2}{\partial\,\rho^2} = J^2\left(\frac{\partial^2}{\partial\,\xi^2} + \frac{\partial^2}{\partial\,\eta^2}\right),$$

where J is the Jacobian of the transformation,

$$|\,J\,| = \left|\frac{\cosh\xi - \cos\eta}{c}\right|,$$

the vanishing of the tangential stress is easily shown to correspond to

$$\left(\frac{\partial^2 \psi}{\partial \xi^2}\right)_{\xi=0} = 0. \tag{3.4}$$

The boundary conditions expressed by (3.3) and (3.4) are equivalent to

$$\left[(\cosh \xi - \mu)^{3/2} \psi\right]_{\xi=0} = 0 \tag{3.5}$$

and

$$\left[\frac{\partial^2}{\partial \xi^2} (\cosh \xi - \mu)^{3/2} \psi\right]_{\xi=0} = 0. \tag{3.6}$$

From (1.7), these result in the simultaneous equations

$$a_n + c_n = 0 \tag{3.7}$$

and

$$(n - \tfrac{1}{2})^2 a_n + (n + \tfrac{3}{2})^2 c_n = 0. \tag{3.8}$$

The surface conditions on the sphere are unaltered from their previous values. Thus, to the above we append equations (2.12) and (2.13). The solution of this set of four simultaneous equations is

$$a_n = c_n = 0, \tag{3.9}$$

$$b_n = \frac{b^2 \sinh^2 \alpha \, Un\,(n+1)}{\sqrt{(2)}\,(2n-1)} \left[\frac{4\cosh^2(n+\frac{1}{2})\alpha + 2(2n+1)\sinh^2\alpha}{2\sinh(2n+1)\alpha - (2n+1)\sinh 2\alpha} - 1\right], \tag{3.10}$$

and

$$d_n = \frac{b^2 \sinh^2 \alpha \, Un\,(n+1)}{\sqrt{(2)}\,(2n+3)} \left[1 - \frac{4\cosh^2(n+\frac{1}{2})\alpha - 2(2n+1)\sinh^2\alpha}{2\sinh(2n+1)\alpha - (2n+1)\sinh 2\alpha}\right]. \tag{3.11}$$

The frictional force experienced by the sphere is therefore

$$F = 6\,\pi\,\kappa\,b\,U\,\beta \tag{3.12}$$

where the Stokes' law correction is

$$\beta = \frac{4}{3} \sinh \alpha \sum_{n=1}^{\infty} \frac{n\,(n+1)}{(2\,n-1)\,(2\,n+3)} \left[\frac{4\cosh^2(n+\frac{1}{2})\alpha + (2n+1)^2\sinh^2\alpha}{2\sinh(2n+1)\alpha - (2n+1)\sinh 2\alpha} - 1\right] \tag{3.13}$$

Values of β calculated from the above are presented in Table 2.

When the sphere is far from the free surface, the Stokes' law correction obtained from (3.13) is

$$\beta \simeq 1 + \frac{3}{4}\frac{b}{h}, \tag{3.14}$$

valid for small b/h.

Table 2. Stokes' law corrections for a free surface, equation (3.13)

α	h/b	β
0	1	∞
0·5	1·1276260	3·98670
1·0	1·5430806	1·97369
1·5	2·3524096	1·4636
2·0	3·7621957	1·247131
2·5	6·1322895	1·1388563
3·0	10·067662	1·0803758
∞	∞	1

Independent confirmation of the present results by a different method of computation is provided by the work of FAXÉN and DAHL [12]. These authors studied the slow motion of two spheres of unequal size each moving with arbitrary constant velocity parallel to the line of centres, using a successive approximation technique known as the method of "reflexions." If in their treatment the radius of each sphere is b, the centre-to-centre distance is $2h$, and if the spheres move *towards* each other with the same velocity, U, their expression for the frictional drag, F, experienced by either sphere assumes the form

$$\frac{F}{6\,\pi\,\kappa\,bU} = 1 + \frac{3}{4}\left(\frac{b}{h}\right) + \frac{9}{16}\left(\frac{b}{h}\right)^2 + \frac{19}{64}\left(\frac{b}{h}\right)^3 + \frac{93}{256}\left(\frac{b}{h}\right)^4 + \frac{387}{1{,}024}\left(\frac{b}{h}\right)^5 + \frac{1{,}197}{4{,}096}\left(\frac{b}{h}\right)^3 + \frac{5{,}331}{16{,}384}\left(\frac{b}{h}\right)^7 + \frac{19{,}821}{65{,}536}\left(\frac{b}{h}\right)^8 + \frac{76{,}115}{262{,}144}\left(\frac{b}{h}\right)^9 + \ldots\ldots \tag{3.15}$$

But, when two equal spheres approach one another with the same velocity, the plane midway between them is a plane of symmetry on which the normal velocity and tangential stresses vanish. Thus, (3.13) and (3.15) should be comparable. Values of the Stokes' law correction calculated from (3.15) are presented in Table 3. At the smaller

ratios of h/b this series converges too slowly to yield accurate results. The numbers tabulated are estimated to be correct to about 1 digit in the last significant figure. These results should be compared with those given in Table 2. The agreement is excellent.

Table 3. Stokes' law corrections for a free surface, equation (3.15)

h/b	β
1	—
1·1276260	3
1·5430806	1·96
2·3524096	1·4634
3·7621957	1·247126
6·1322895	1·13885607
10·067662	1·080375850
∞	1

4. DISCUSSION

The preceding calculations show that the effect of a stationary obstacle in the path of a particle is to increase the resistance of the latter beyond that which it would experience in an unbounded medium when moving at the same velocity. Alternatively, if a given force (e.g. gravity) be acting the effect is to decrease the sedimentation velocity below that given by Stokes' law. Furthermore, the increased resistance is less in the case of a free surface than in the case of a solid surface, which is unable to yield to the stresses. The inclusion of inertial effects would not, in all probability, modify these qualitative conclusions.

On the other hand, the present results show that for both types of surfaces the resistance is increased by the same amount regardless of whether the particle is moving towards or away from the plane. It is here that the omission of inertial terms in the equations of motion leads, in the general case, to an unrealistic inference. It seems more natural to expect that the resistance be different, according as the sphere is approaching or receding from the surface. Of the two possibilities, the most plausible conjecture is that the resistance suffered by an *approaching* sphere is greatest. This contention can be demonstrated by invoking results from ideal fluid theory [6] which state that a sphere moving perpendicular to a wall is repelled by the wall whether the particle motion is directed towards or away from it, the magnitude of the force being the same in either case. Thus, the forces of inertia hinder the particle in the former case and assist it during the latter. From this we may infer that when inertial effects are sensible the particle resistance is least in the case where the sphere recedes from the surface and vice-versa.

It is a matter of experience that the proximity of a boundary to a moving particle enhances the range of particle Reynolds numbers, Ub/ν, over which the creeping-motion equations provide a valid description of the flow – i.e. the range in which a direct proportionality exists between particle resistance and velocity. For example, in CARTY'S [13] experimental study of a ball rolling within a viscous fluid down an inclined plane, this proportionality was observed to persist up to particle Reynolds numbers of about 20. On this basis it is reasonable to expect the present analysis to yield correct values at Reynolds numbers substantially above 0·5, the value normally cited as the upper limit of Stokes' law for an unbounded fluid.

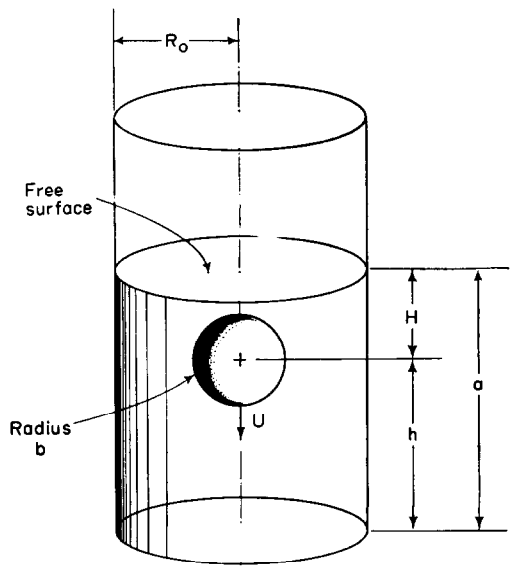

FIG. 2. Falling-ball viscometer.

5. Falling-ball Viscometer

It is of interest to attempt an application of our results to the falling-ball viscometer. In such a device a spherical particle falls along the axis of a circular cylinder, as in Fig. 2. Of importance are the corrections to Stokes' law occasioned by the proximity of the cylindrical boundary, container bottom and free surface to the particle.

Dimensional analysis indicates that the Stokes' law correction resulting from these three effects is of the form

$$\frac{F}{6\,\pi\,\kappa\,bU} = f\left(\frac{b}{R_0}, \frac{b}{h}, \frac{b}{H}\right)$$

Of primary interest is the situation wherein each of the above ratios are small. The separate corrections required for each of the boundaries alone are :

(i) cylindrical boundary correction [1] :

$$f\left(\frac{b}{R_0}, 0, 0\right) = 1 + 2{\cdot}105\left(\frac{b}{R_0}\right) + 0\left[\left(\frac{b}{R_0}\right)^2\right]$$

(ii) container bottom correction :

$$f\left(0, \frac{b}{h}, 0\right) = 1 + \frac{9}{8}\left(\frac{b}{h}\right) + 0\left[\left(\frac{b}{h}\right)^2\right]$$

(iii) free surface correction :

$$f\left(0, 0, \frac{b}{H}\right) = 1 + \frac{3}{4}\left(\frac{b}{H}\right) + 0\left[\left(\frac{b}{H}\right)^2\right]$$

It is tempting to assume that these corrections can be applied separately in the limit, in which event a Taylor series expansion would give

$$\frac{F}{6\,\pi\,\kappa\,bU} = 1 + 2{\cdot}105\left(\frac{b}{R_0}\right) + \frac{9}{8}\left(\frac{b}{h}\right) + \frac{3}{4}\left(\frac{b}{H}\right) + \ldots\ldots \qquad (5.1)$$

This is essentially the point of view adopted by Ladenburg [14] in an oft-cited paper dealing with corrections to the falling-ball viscometer. The conception is, however, fundamentally unsound, as it gives cognizance only to interactions between particle and boundaries while failing to take account of the interactions among the boundaries themselves.

To demonstrate this contention consider the related, but more tractable, problem of a sphere falling between two infinite parallel rigid planes, the motion of the particle being parallel to the walls, as in Fig. 3. Let l_1, and l_2, respectively, denote the distance of each plane from the mid-point of the sphere, and let $2\,l$ be the distance between walls.

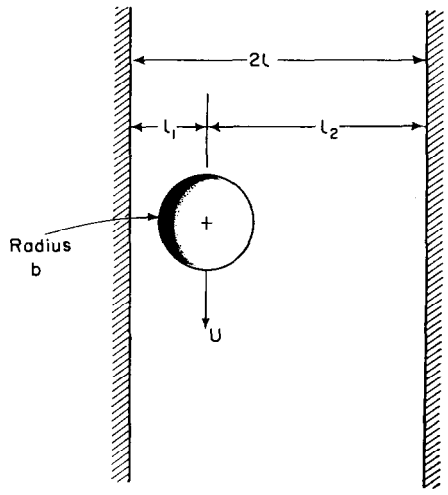

Fig. 3. Sphere falling between parallel planes.

Lorentz [2] provides a solution in the case where a sphere moves parallel to a *single* plane wall, valid for small values of b/l_i.

His correction to Stokes' law is

$$\frac{F}{6\,\pi\,\kappa\,bU} = 1 + \frac{9}{16}\left(\frac{b}{l_i}\right) + 0\left[\left(\frac{b}{l_i}\right)^2\right] \quad (i = 1, 2)$$

Thus, were it correct to simply superimpose the individual corrections, the resistance of a sphere falling between two plane walls would be given by

$$\frac{F}{6\,\pi\,\kappa\,bU} = 1 + \frac{9}{16}\frac{b}{l}\left(\frac{l}{l_1} + \frac{l}{l_2}\right) + 0\left[\left(\frac{b}{l}\right)^2\right] \qquad (5.2)$$

Now, Faxén [15] has obtained a detailed solution of the problem at hand, valid for small b/l. When $l_1 = l_2$ Faxén's solution is

$$\frac{F}{6\,\pi\,\kappa\,bU} = 1 + 1{\cdot}004\,\frac{b}{l} + 0\left[\left(\frac{b}{l}\right)^2\right]$$

while for $l_1 = 3\,l_2$, the coefficient in the above expression becomes 1·3052. The corresponding coefficients derived from (5·2) are 1·125 and 1·500,

respectively. As these differ from the correct values we may infer that it is not generally permissible to superpose individual corrections.

Although the technique of superposing solutions is fundamentally in error, it appears from the two numerical examples cited above that the errors incurred may not be too serious. It therefore appears worthwhile to bring equation (5.1) to fruition, despite its shortcoming. This calculation differs from LADENBURG'S [14] principally in that the free surface correction was not known to him. In its stead he utilized the same correction as for a rigid surface.

The instantaneous velocity of the ball is $U = -dh/dt$. Let h_i and h_f, respectively, denote the initial and final distance of the ball above the bottom of the container and let $a = H + h$ be the depth of liquid in the cylinder. The duration of the experiment is t. Upon substituting into equation (5.1) and performing the necessary integrations, bearing in mind that F is constant, we eventually obtain

$$\frac{F}{6\pi\kappa b\bar{U}} \simeq 1 + 2{\cdot}105\left(\frac{b}{R_0}\right) + \left(\frac{b}{a}\right)\frac{1}{(h_i/a) - (h_f/a)} \left[\frac{9}{8}\ln\frac{(h_i/a)}{(h_f/a)} + \frac{3}{4}\ln\frac{1-(h_f/a)}{1-(h_i/a)}\right] \tag{5.3}$$

where $\bar{U} = (h_i - h_f)/t$ denotes the average velocity of fall of the ball during the experiment. By way of example, when the speed of fall is timed over the middle third of the length of the viscometer we have $h_i/a = 2/3$ and $h_f/a = 1/3$, whence

$$\frac{F}{6\pi\kappa b\bar{U}} \simeq 1 + 2{\cdot}105\frac{b}{R_0} + 3{\cdot}90\frac{b}{a}$$

For a typical viscometer whose depth-to-radius ratio, a/R_0, is 10 : 1 this implies that the correction for end-effects will be roughly one fifth of the correction for the cylindrical boundary alone.

Acknowledgements—The author would like to thank JOHN HAPPEL of New York University for his useful suggestions.

NOTATION

a = depth of liquid in viscometer
a_n = coefficient in equation (1.9)
b = radius of sphere
b_n = coefficient in equation (1.9)
c = positive parameter defined by equation (1.6)
c_n = coefficient in equation (1.9)
$C_m^{-1/2}(\mu)$ = Gegenbauer polynomial of order m and degree $-\frac{1}{2}$ with argument μ
d_n = coefficient in equation (1.9)
F = force on sphere
h = distance from sphere centre to plane boundary
h_i = initial distance
h_f = final distance
H = distance from sphere centre to free surface
$i = \sqrt{-1}$ = imaginary number
J = Jacobian of a co-ordinate system transformation
k = summation index
l = one-half distance between walls
l_1, l_2 = distance from sphere centre to walls
n = summation index
p = dynamic pressure of fluid
$P_m(\mu)$ = Legendre polynomial of order m with argument μ
r_1, r_2 = distance from origin to points 1 and 2, respectively
R_0 = cylinder radius
t = time
U = instantaneous velocity of sphere
$\bar{U}$ = average velocity of sphere
$U_n(\xi)$ = function of argument ξ defined in equation (1.9)
$\mathbf{v}$ = fluid velocity vector
v_ρ = velocity component in radial direction
v_z = velocity component in longitudinal direction
z = co-ordinate measured along symmetry axis
$\widehat{z\rho}$ = ρ — component of stress-vector acting across plane z = constant
$\widehat{z\phi}$ = ϕ — component of stress-vector acting across plane z = constant

Greek Letters

α = parameter defined by equation (1.5)
β = Stokes' law correction factor for a *free* surface, defined by equation (3.12)
η = bipolar co-ordinate
κ = dynamic viscosity of fluid
λ = Stokes' law correction factor for a *solid* surface, defined by equation (2.18)
$\mu = \cos\eta$
ξ = bipolar co-ordinate
ρ = cylindrical co-ordinate
ρ = density of fluid
ν = kinematic viscosity of fluid
ϕ = azimuthal cylindrical co-ordinate
Φ^2 = differential operator defined by equation (1.3)
ψ = Stokes' stream function

References

[1] Haberman W. and Sayre R. M. *Motion of Rigid and Fluid Spheres in Stationary and Moving liquids inside Cylindrical Tubes.* Report 1143. David W. Taylor Model Basin, U.S. Navy Department, Washington D.C., October 1958.

[2] Lorentz H. A. *Abh. theoret. Phys.* 1907 **1** 23.

[3] Jeffery G. B. *Proc. Lond. Math. Soc.* (Series 2) 1915 **14** 327.

[4] Wadhwa Y. D. *J. Sci. Engng. Res.* India 1958 **2** 245.

[5] Stimson M. and Jeffery G. B. *Proc. Roy. Soc.* 1926 A **111**, 110.

[6] Milne-Thomson L. M. *Theoretical Hydrodynamics* (3rd ed.) pp. 168, 513, 553. Macmillan, New York 1950.

[7] Jeffery G. B. *Proc. Roy. Soc.* 1912 A **87**, 109.

[8] Faxén H. *Z. angew. Math. Mech.* 1927 **7** 79.

[9] *Table of Hyperbolic Sines and Cosines,* Appl. Math. Ser. Nos. 36 (Nov. 30 1953) and 45 (Nov. 15 1955). National Bureau of Standards (U.S. Commerce Department) Washington D.C.

[10] *Tables of the Exponential Function exp* (x) Appl. Math. Ser. No. 14 (June 29 1951). National Bureau of Standards (U.S. Commerce Department) Washington, D.C.

[11] *Tables of the Descending Exponential,* Appl. Math. Ser. No. 46 (Nov. 15 1955). National Bureau of Standards (U.S. Commerce Department) Washington D.C.

[12] Faxén H. and Dahl H. *Ark. Mat., Astron. Fys.* 1925 **19** A No. 13.

[13] Carty J. J. Jr. *Resistance Coefficients for Spheres on a Plane Boundary.* B.S. Thesis, Massachusetts Institute of Technology 1957.

[14] Ladenburg R. *Ann. Phys.* 1907 **23** 447.

[15] Faxén H. *Ann. Phys.* 1922 **68** 89 ; *Ark. Mat., Astron. Fys.* 1924 **18** No. 29 ; 1925 **19** A No. 13.