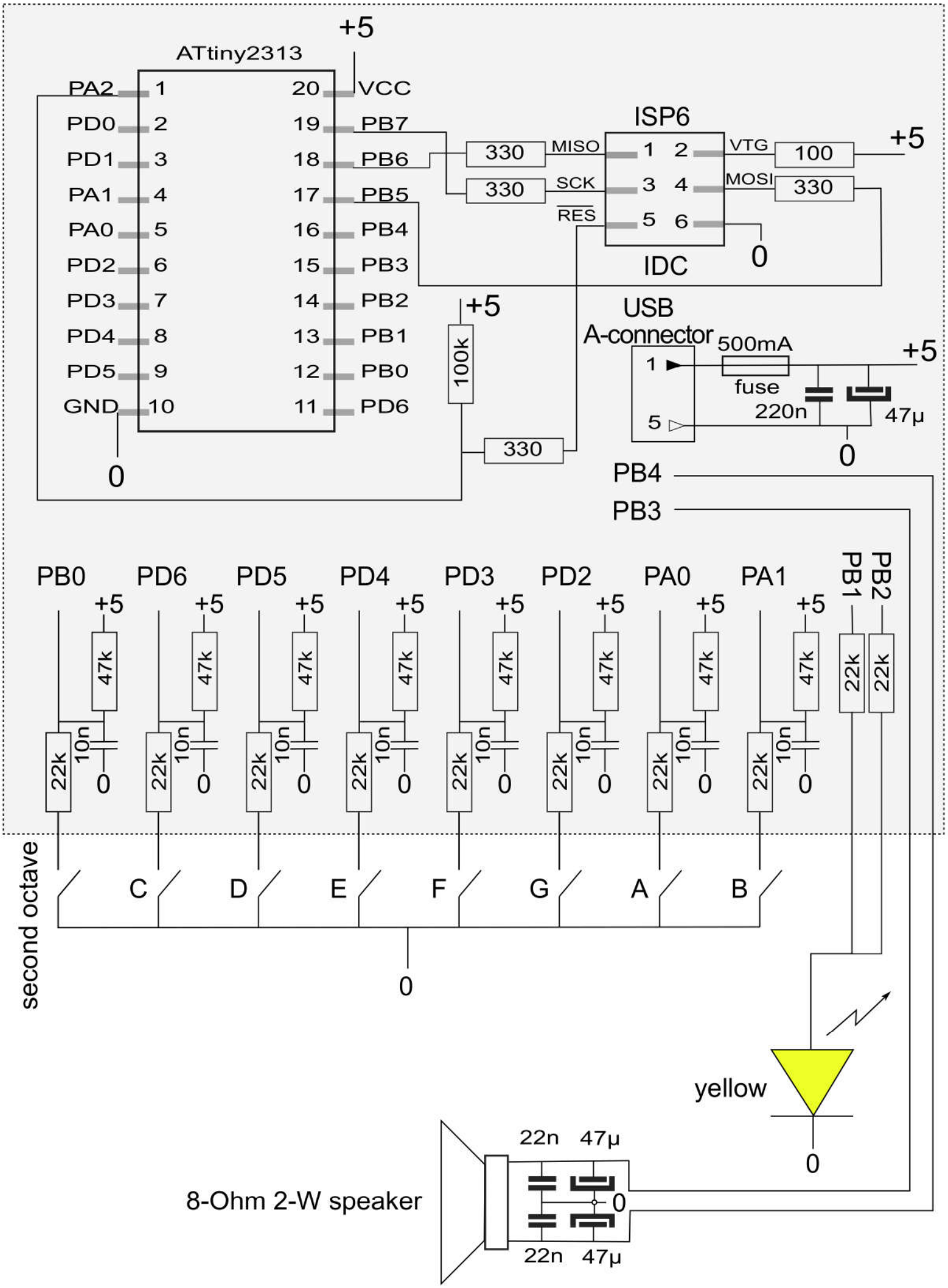

C diatonic scale generator on 2 octaves