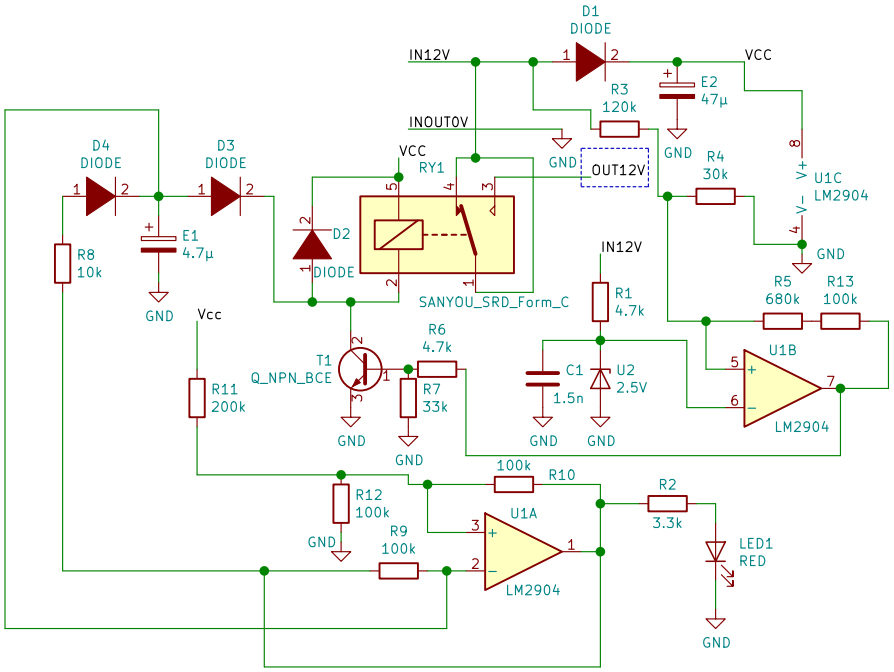

cut-in 12.8V - cut-out 11.6 V

WAECO

Sheet: /

File: lvd.sch

Title: CoolPower M50U-12

Size: A4	Date: 2019-07-30	**Rev:**
KiCad E.D.A. eeschema (5.1.2)-2		Id: 1/1