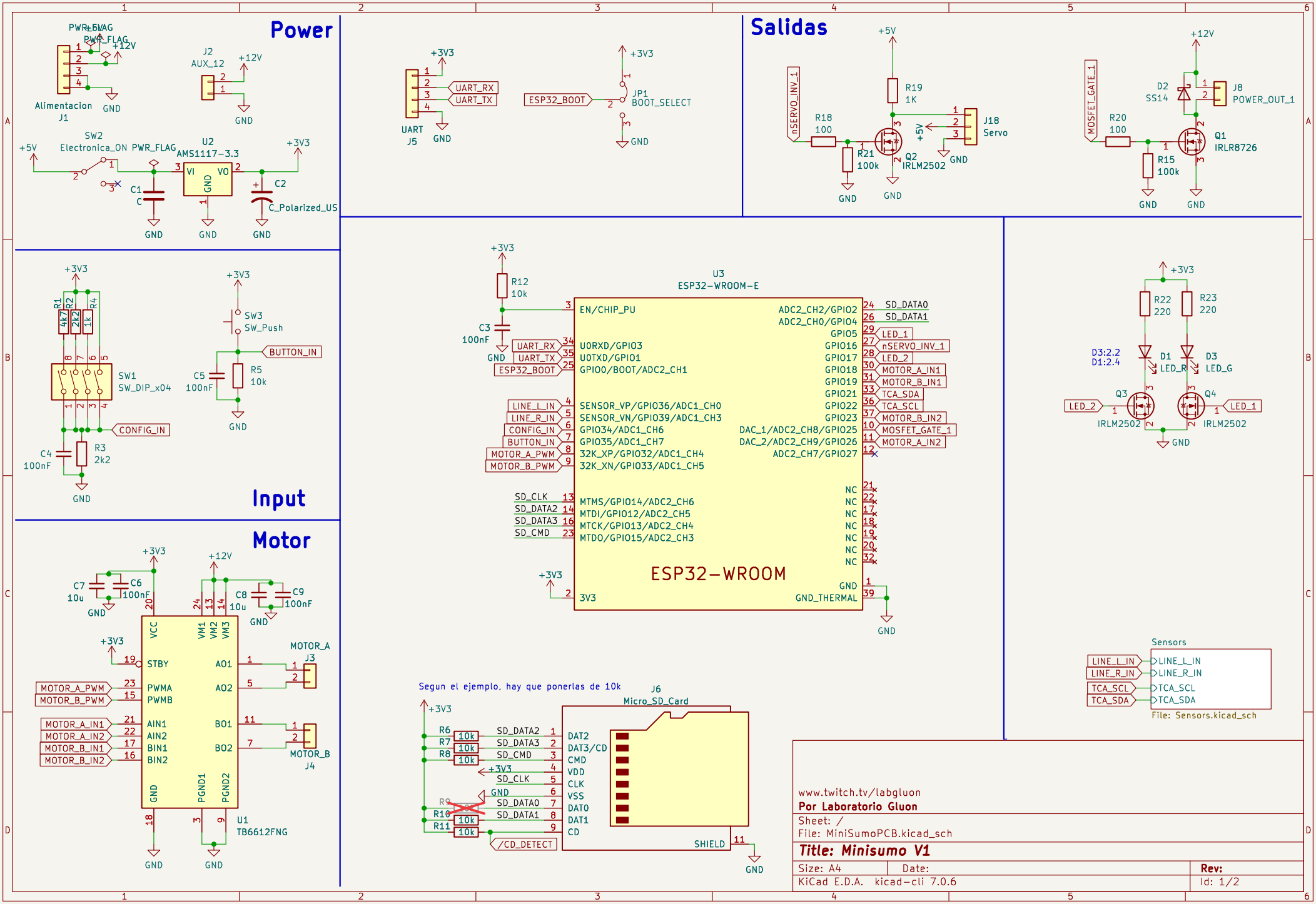
Power
Alimentacion
J1
PWR_FLAG
+12V
GND
J2
AUX_12
SW2
Electronica_ON
+5V
U2
AMS1117-3.3
VI
VO
GND
C1
C
C2
C_Polarized_US
+3V3
UART
J5
UART_RX
UART_TX
ESP32_BOOT
JP1
BOOT_SELECT
Salidas
nSERVO_INV_1
R18
100
R19
1K
R21
100k
Q2
IRLM2502
J18
Servo
MOSFET_GATE_1
R20
100
R15
100k
D2
SS14
J8
POWER_OUT_1
Q1
IRLR8726
Input
R1
R2
R4
4k7
2k2
1k
SW1
SW_DIP_x04
CONFIG_IN
C4
100nF
R3
2k2
SW3
SW_Push
BUTTON_IN
C5
100nF
R5
10k
U3
ESP32-WROOM-E
R12
10k
C3
100nF
EN/CHIP_PU
U0RXD/GPIO3
U0TXD/GPIO1
GPIO0/BOOT/ADC2_CH1
SENSOR_VP/GPIO36/ADC1_CH0
SENSOR_VN/GPIO39/ADC1_CH3
GPIO34/ADC1_CH6
GPIO35/ADC1_CH7
32K_XP/GPIO32/ADC1_CH4
32K_XN/GPIO33/ADC1_CH5
MTMS/GPIO14/ADC2_CH6
MTDI/GPIO12/ADC2_CH5
MTCK/GPIO13/ADC2_CH4
MTDO/GPIO15/ADC2_CH3
ADC2_CH2/GPIO2
ADC2_CH0/GPIO4
GPIO5
GPIO16
GPIO17
GPIO18
GPIO19
GPIO21
GPIO22
GPIO23
DAC_1/ADC2_CH8/GPIO25
DAC_2/ADC2_CH9/GPIO26
ADC2_CH7/GPIO27
NC
GND
GND_THERMAL
3V3
ESP32-WROOM
LINE_L_IN
LINE_R_IN
MOTOR_A_PWM
MOTOR_B_PWM
SD_CLK
SD_DATA2
SD_DATA3
SD_CMD
SD_DATA0
SD_DATA1
LED_1
LED_2
MOTOR_A_IN1
MOTOR_B_IN1
TCA_SDA
TCA_SCL
MOTOR_B_IN2
MOSFET_GATE_1
MOTOR_A_IN2
R22
220
R23
220
D3:2.2
D1:2.4
D1
LED_R
D3
LED_G
Q3
Q4
IRLM2502
Motor
C7
10u
C6
100nF
C8
10u
C9
100nF
VCC
VM1
VM2
VM3
STBY
PWMA
PWMB
AIN1
AIN2
BIN1
BIN2
AO1
AO2
BO1
BO2
GND
PGND1
PGND2
U1
TB6612FNG
MOTOR_A
J3
MOTOR_B
J4
Segun el ejemplo, hay que ponerlas de 10k
J6
Micro_SD_Card
R6
R7
R8
R9
R10
R11
10k
DAT2
DAT3/CD
CMD
VDD
CLK
VSS
DAT0
DAT1
CD
SHIELD
/CD_DETECT
Sensors
File: Sensors.kicad_sch
www.twitch.tv/labgluon
Por Laboratorio Gluon
Sheet: /
File: MiniSumoPCB.kicad_sch
Title: Minisumo V1
Size: A4
Date:
Rev:
KiCad E.D.A. kicad-cli 7.0.6
Id: 1/2

Line sensors

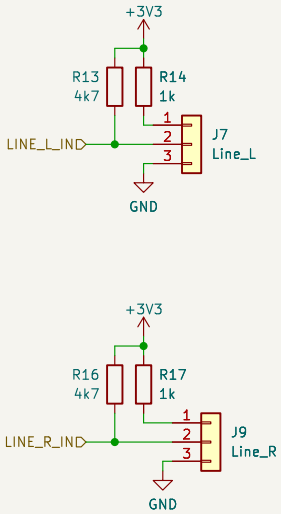

TOF/I2C

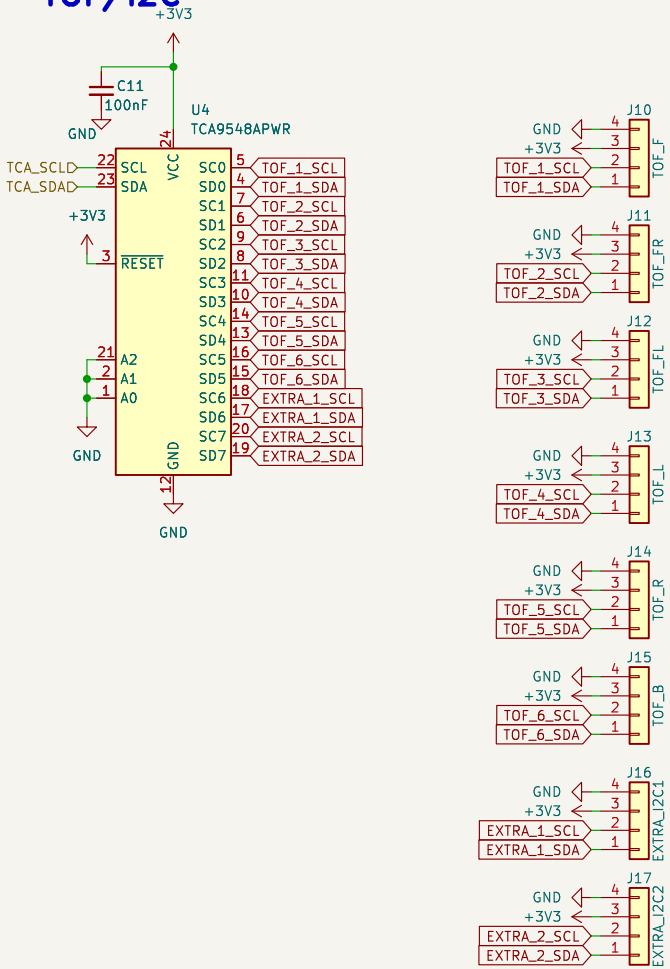

Sheet: /Sensors/
File: Sensors.kicad_sch

Title:

Size: A4	Date:	Rev:
KiCad E.D.A. kicad-cli 7.0.6		Id: 2/2