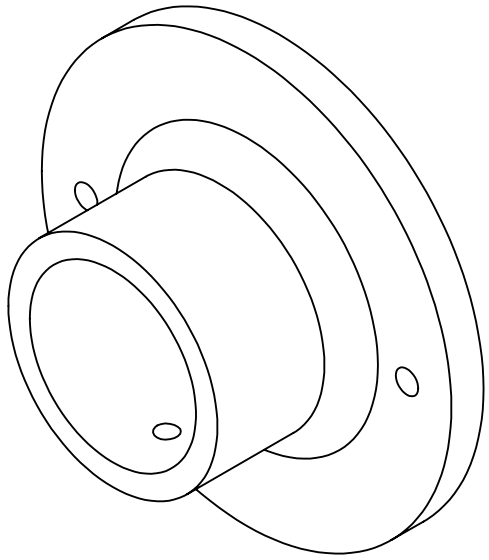

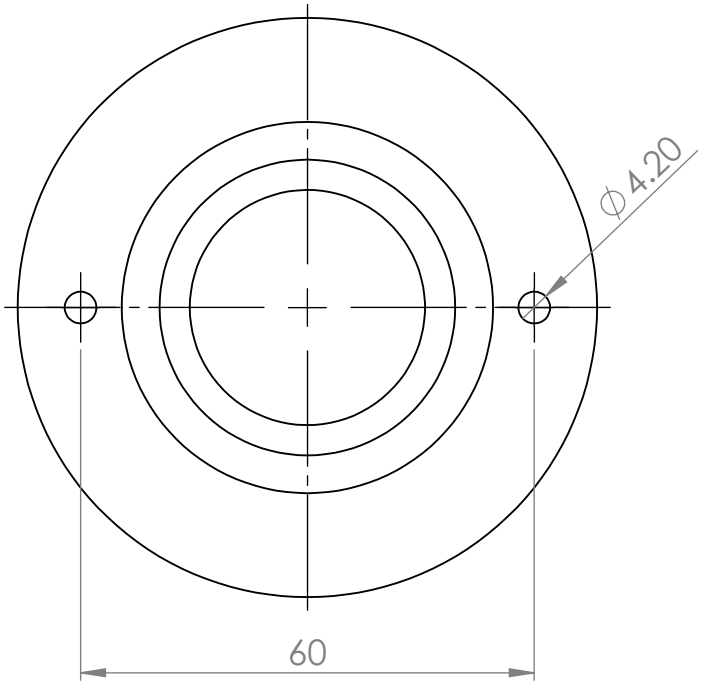

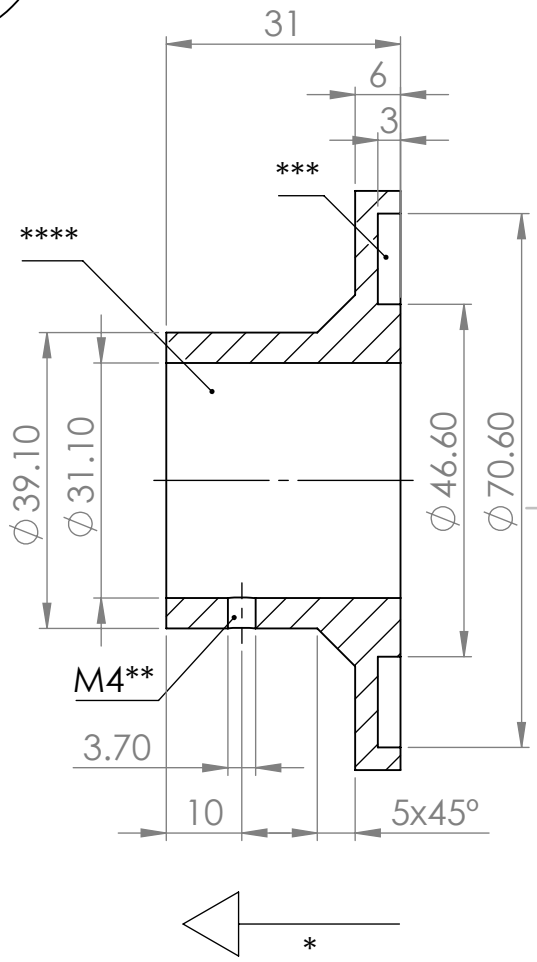

* Recomended FDM 3D printing direction.
** Use M4 tap or drive-in a screw to form the thread.
*** Fit side to Horiba Jobin-Yvon TRIAX port.
**** Fit side to Thorlabs SM1 tubes.

UNLESS OTHERWISE SPECIFIED: DIMENSIONS ARE IN MILLIMETERS	~~FINISH:~~ 3D print	DEBURR AND BREAK SHARP EDGES	DO NOT SCALE DRAWING
REVISION 00			

	NAME	SIGNATURE	DATE
DRAWN	F.O.		2024-09-29
CHK'D	F.O.		2024-09-29
APPV'D			
MFG			
Q.A			

TITLE:

Adapter TRIAX port to Thorlabs SM1 tube

MATERIAL: PLA / ABS

WEIGHT:

DWG NO. LAB-911-010-110

A4

SCALE:1:1

SHEET 1 OF 1