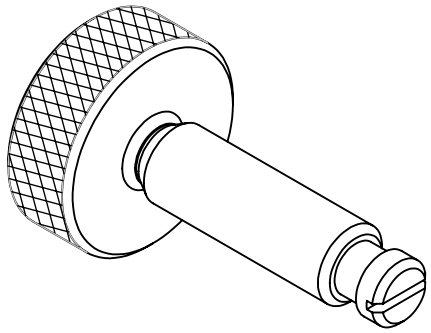

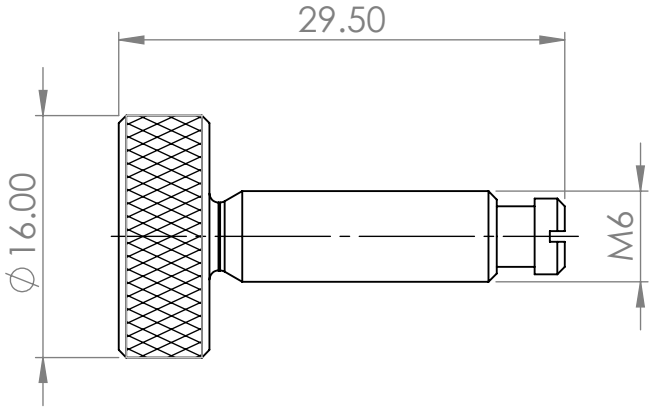

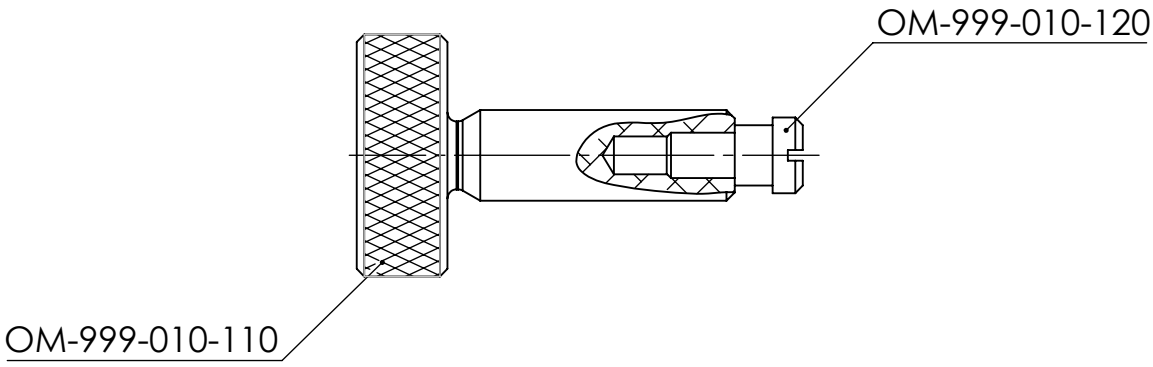

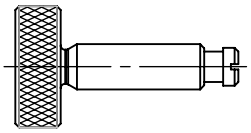

1:1

UNLESS OTHERWISE SPECIFIED: DIMENSIONS ARE IN MILLIMETERS SURFACE FINISH: TOLERANCES: ISO 2768-mK	FINISH:	DEBURR AND BREAK SHARP EDGES	DO NOT SCALE DRAWING
			REVISION 01

	NAME	SIGNATURE	DATE
DRAWN	F.O.		2024-10-07
CHK'D	F.O.		2024-10-07
APPV'D			
MFG			
Q.A			

TITLE:

MATERIAL:

WEIGHT: 5.3 g

DWG NO. OM-999-010-010

A4

SCALE:2:1

SHEET 1 OF 1