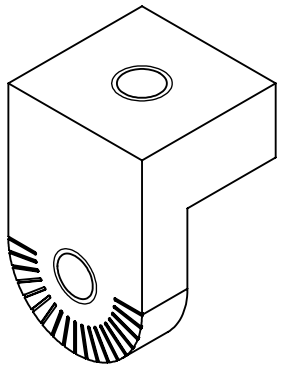

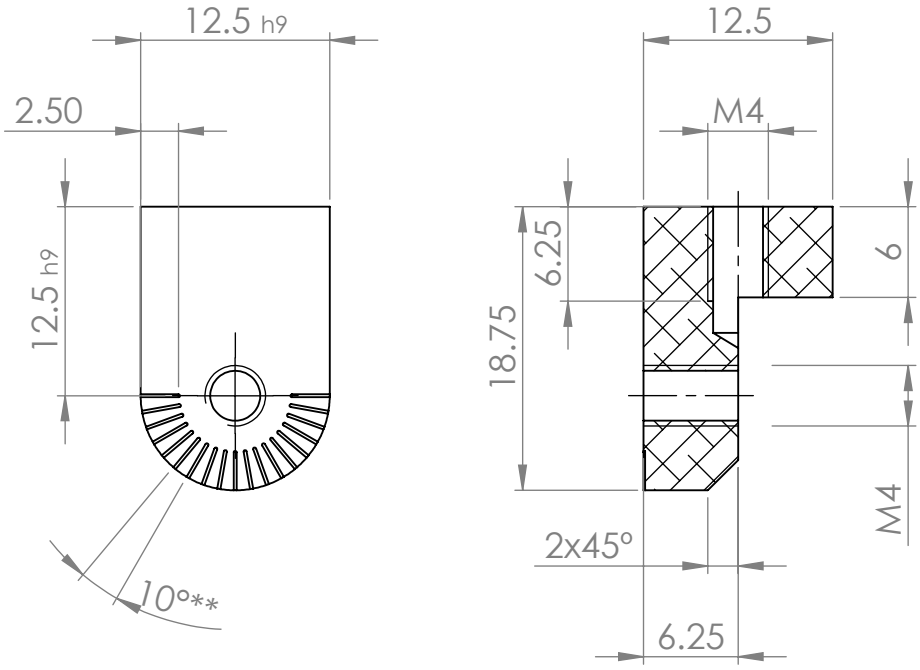

** Laser engraving after eloxation.
Line width = 0.2 mm.
Line deep = 0.1 mm.
(or until bare aluminium exposed)

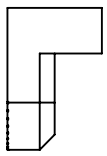

1:1

UNLESS OTHERWISE SPECIFIED: DIMENSIONS ARE IN MILLIMETERS SURFACE FINISH: TOLERANCES: ISO 2768-mK	FINISH: 1. Eloxation, Black 2. Laser Engraving	DEBURR AND BREAK SHARP EDGES	DO NOT SCALE DRAWING / REVISION 01

	NAME	SIGNATURE	DATE
DRAWN	F.O.		2024-10-06
CHK'D	F.O.		2024-10-06
APPV'D			
MFG			
Q.A			

TITLE: Joint A

MATERIAL: Aluminium

WEIGHT:

DWG NO. OM-001-060-110

A4

SCALE:2:1

SHEET 1 OF 1