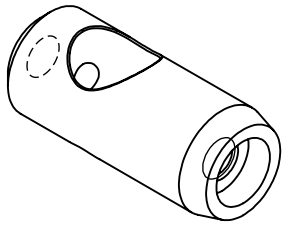

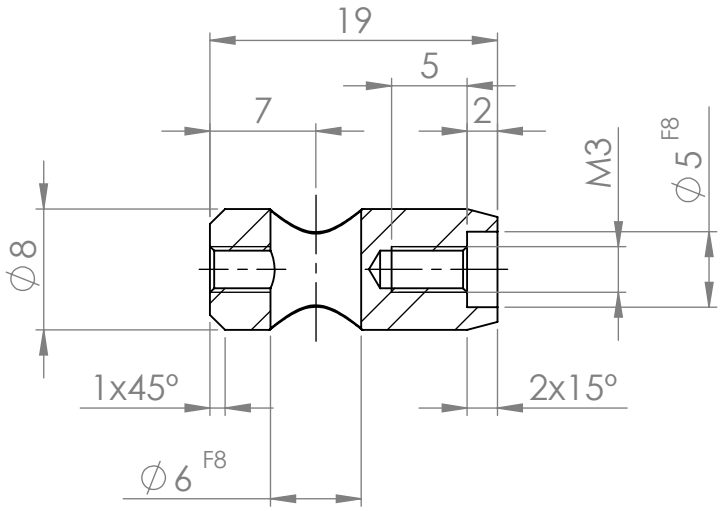

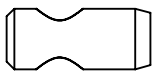

1:1

UNLESS OTHERWISE SPECIFIED: DIMENSIONS ARE IN MILLIMETERS SURFACE FINISH: TOLERANCES: ISO 2768-mK	FINISH: Matte	DEBURR AND BREAK SHARP EDGES	DO NOT SCALE DRAWING REVISION 01

	NAME	SIGNATURE	DATE
DRAWN	F.O.		2024-10-01
CHK'D	F.O.		2024-10-01
APPV'D			
MFG			
Q.A			

TITLE:

Arm

MATERIAL: Stainless Steel

WEIGHT: 5 g

DWG NO. OM-009-010-120

A4

SCALE:2:1

SHEET 1 OF 1