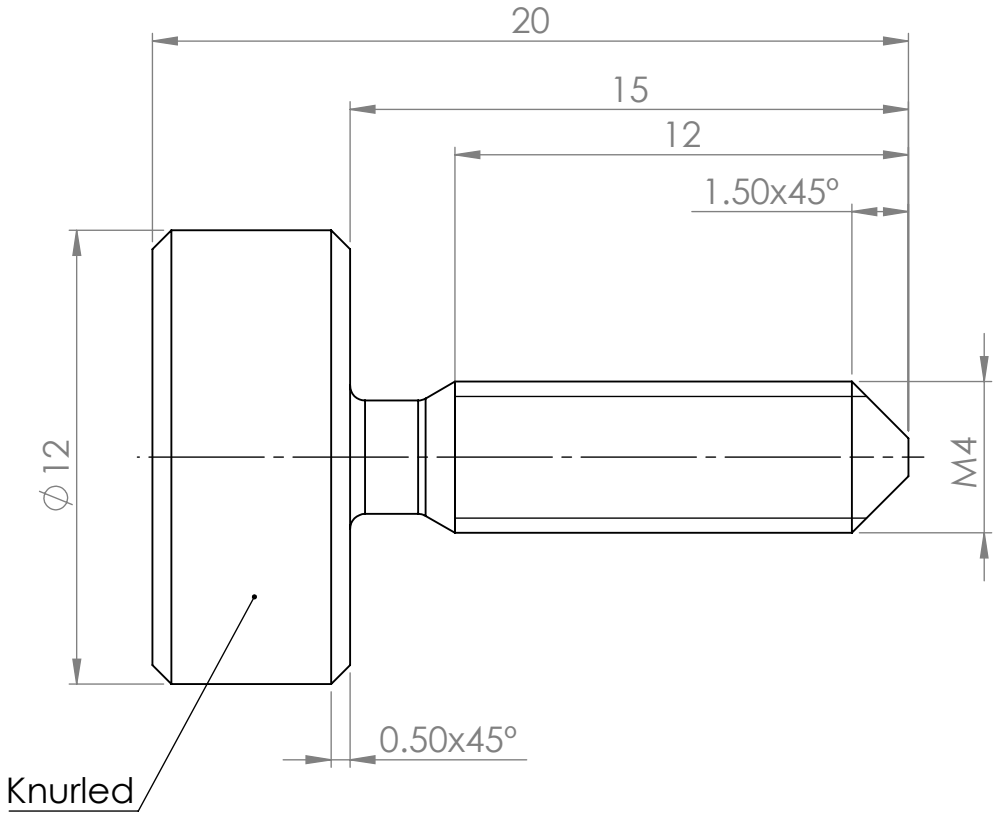

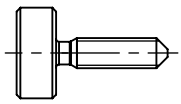

1:1

UNLESS OTHERWISE SPECIFIED: DIMENSIONS ARE IN MILLIMETERS SURFACE FINISH: TOLERANCES: ISO2768-mK	FINISH: Eloxation, Black	DEBURR AND BREAK SHARP EDGES	DO NOT SCALE DRAWING REVISION 01

	NAME	SIGNATURE	DATE
DRAWN	F.O.		2024-09-27
CHK'D	F.O.		2024-09-27
APPV'D			
MFG			
Q.A			

TITLE:

Thumb Screw

MATERIAL: Aluminium

WEIGHT: 2 g

DWG NO. OM-003-010-930

A4

SCALE:5:1

SHEET 1 OF 1