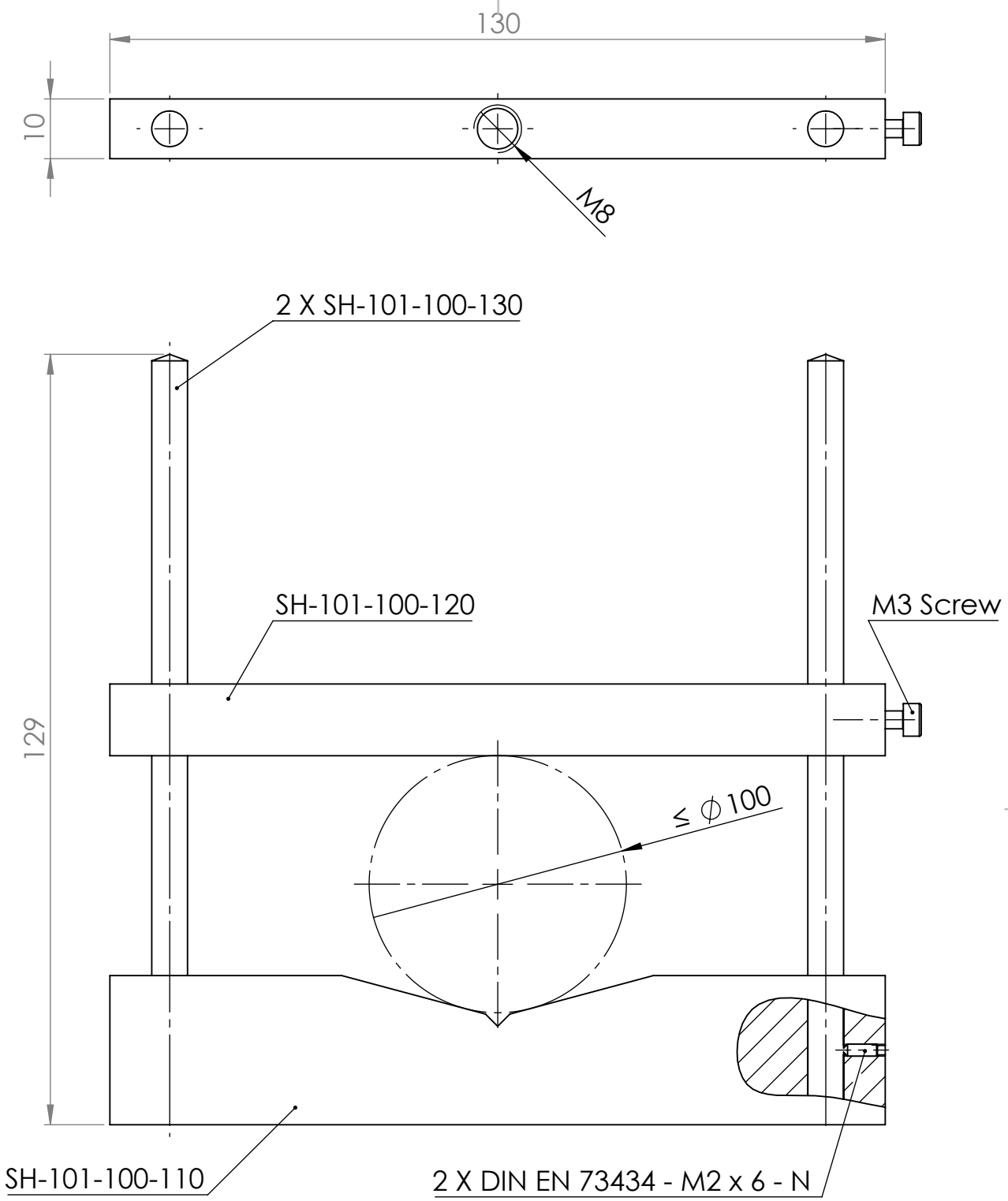

Note: Drawing based on Spindler & Hoyer part.

UNLESS OTHERWISE SPECIFIED: DIMENSIONS ARE IN MILLIMETERS SURFACE FINISH: TOLERANCES: ISO 2768-mK	FINISH:	DEBURR AND BREAK SHARP EDGES	DO NOT SCALE DRAWING — REVISION 00

	NAME	SIGNATURE	DATE
DRAWN	F.O.		2024-11-28
CHK'D			
APPV'D			
MFG			
Q.A			

TITLE: Lens Support

MATERIAL:

WEIGHT: 87 g

DWG NO. SH-101-100-010

A4

SCALE:1:1

SHEET 1 OF 2

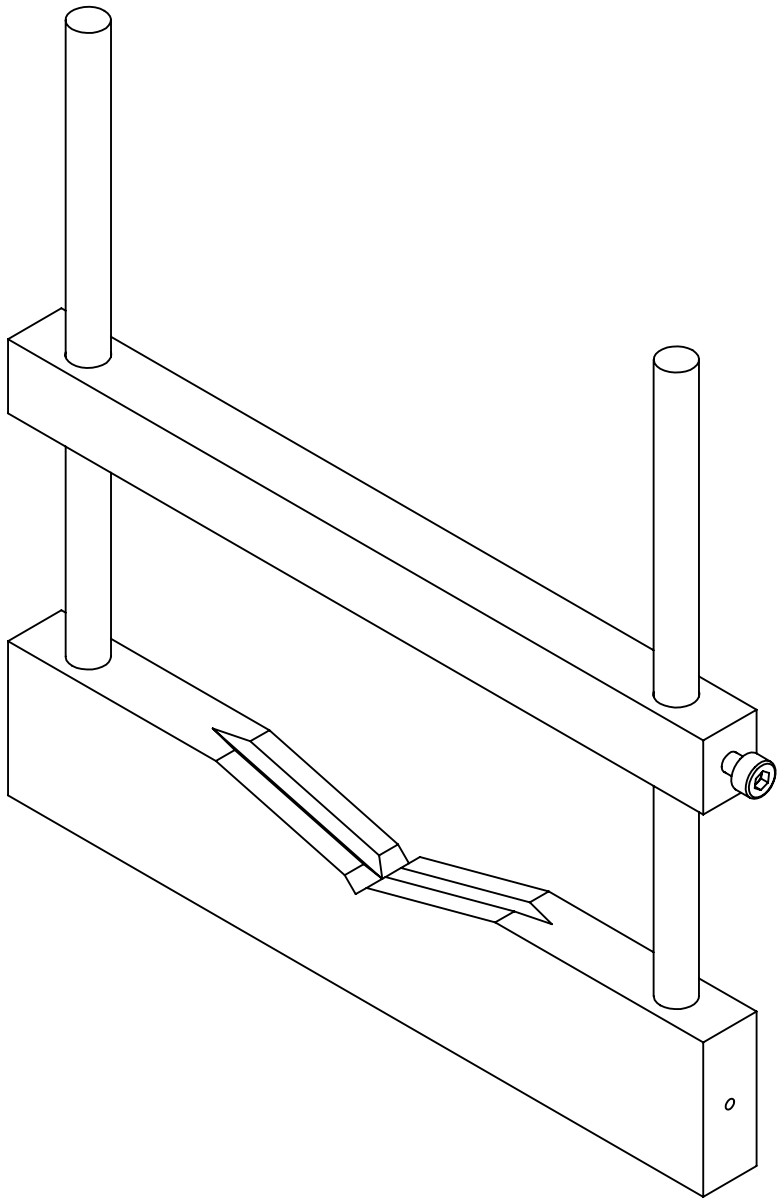

Note: Drawing based on Spindler & Hoyer part.

UNLESS OTHERWISE SPECIFIED: DIMENSIONS ARE IN MILLIMETERS SURFACE FINISH: TOLERANCES: ISO 2768-mK	FINISH:	DEBURR AND BREAK SHARP EDGES	DO NOT SCALE DRAWING — REVISION 00

	NAME	SIGNATURE	DATE
DRAWN	F.O.		2024-11-28
CHK'D			
APPV'D			
MFG			
Q.A			

TITLE:

Lens Support

MATERIAL:

WEIGHT: 87 g

DWG NO. SH-101-100-010

A4

SCALE:1:1

SHEET 2 OF 2