ELEC6234
Embedded Processor Synthesis

picoRISC architecture

UNIVERSITY OF Southampton
School of Electronics and Computer Science

picoRISC – our case study

- Inspired by MIPS and RISC-V, but not a version of either
- The diagram below shows a MIPS-like processor but RISC-V inspired features can be added easily thus making it a more general picoRISC embedded application specific architecture
- Architecture suited for efficient synthesis on FPGAs with synchronous RAM blocks
- User specifies the width of the data bus n , typically 8, 16, 32, 64 bits.
- User specifies the instruction set to be implemented in the decoder

pMIPS version 1 – no RAM, no branches

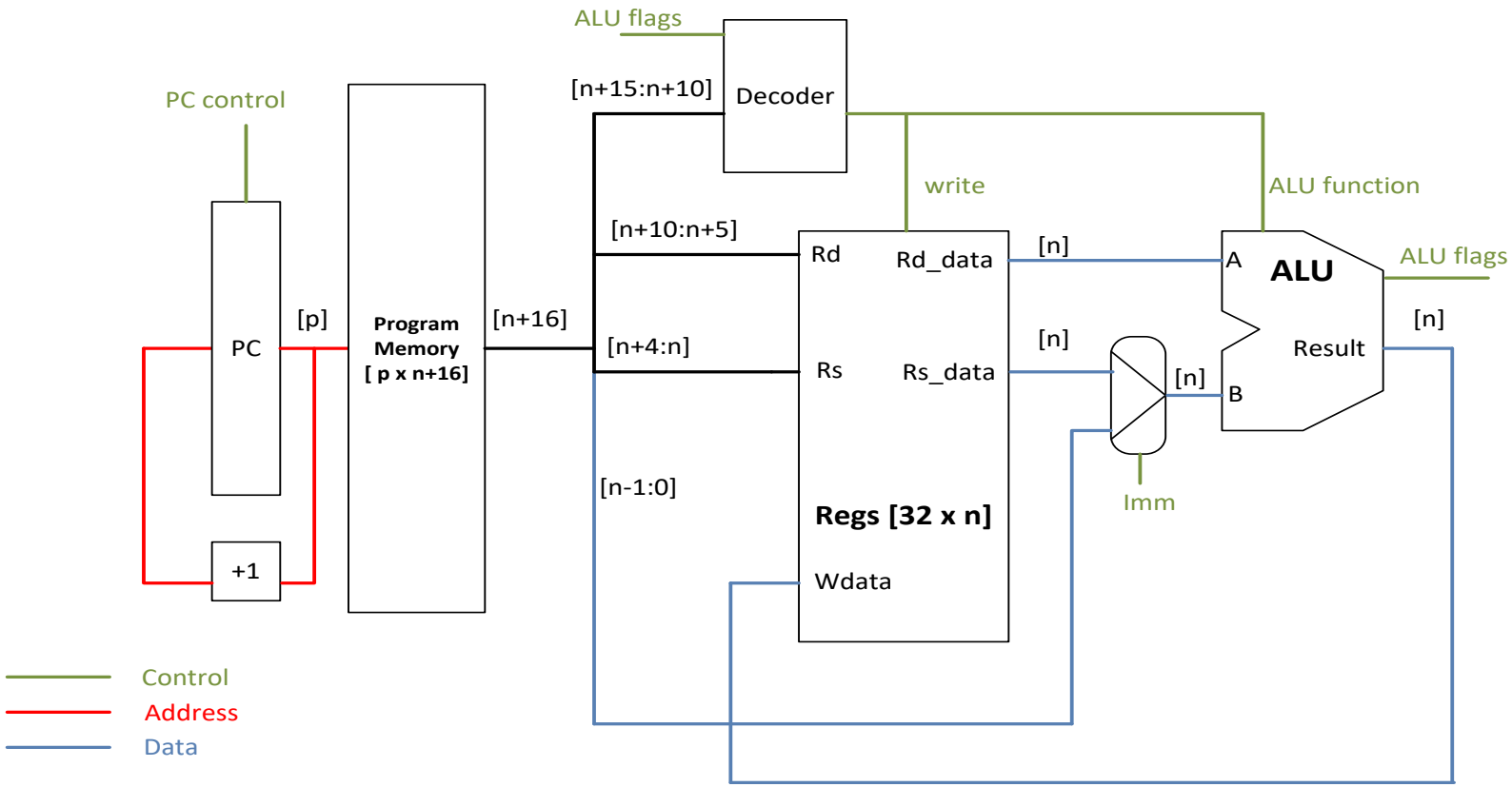

picoMIPS instruction groups

- ALU instructions operate on registers only, not RAM
  - ADD, SUB, AND, OR, XOR,NOR
    - 2 register format: ADD %d, %s -> %d = %d +%s
  - ADDI, SUBI, ANDI,ORI, XORI, NORI
    - registers + immediate ADDI %d, %s imm -> %d = %s+imm
  - MUL, shift instructions SLL,SRL,SRA (will not be included in our case study)

- Program flow control
  - J address - unconditional absolute jump
  - BEQ %d, %s address – conditional relative branch: branch if %d-%s == 0
  - Other conditional branches:
  - BNE branch if // Z=0,
  - `define BGE // ~ N ; BLT %d,%s == BGE %s,%d
  - `define BLO // C=1 (lower, unsigned), BHI %d,%s

- RAM related instructions
  - LW %d, [address]– load word from RAM into register %d
  - SW %s, [address] – store word from register %s into RAM

- Others
  - Eg. NOP; no operation
  - Subroutine calls and returns, stack instructions – not implemented in our case study

- General approach when synthesising on an FPGA – the decoder should only implement the instructions used by the program stored in the program memory
  - Hardware efficient approach

Translating C statements to picoMIPS machine code - if statement

- if (a==0) b=1; else b=2;

```
.def        a=20                    ; a is register 20
.def        b=21                    ; b is  register 21
            BNE %a, %0, Lelse ; if a!=0 goto Lelse, nb. reg %0 is always 0
                                    ; load immediate value to b:
            LDI %b, 1               ; load 1 to %b (ADDI %b, %0, 1)
            J Lend                  ; jump to Lend
Lelse:      …
            LDI %b,2                ; actual code: ADDI %b, %0, 2
Lend:
```

Translating C statements to picoMIPS machine code - while statement

- i=0; n=10; a=10; while (i<=n){ a += a; i++;}

```
.def        i=16
.def        n=17
.def        a=18
            LDI %i,0
            LDI %n,10
            LDI %a,10
Loop:
            BLO %n,%i, Lend  ; branch to exit loop if Carry set, i.e. n<i
            ADD %a,%a        ; a = a+a
            ADDI %i,%1       ; i = i + 1
            J Loop           ; jump to Loop
Lend:       …
```

Quick exercise:

- Translate the following ‘for’ statement to picoMIPS assembler
  - ✓ for(i=0;i<=n;i++);

```
.def      i=16
.def      n=17

…
```

Steps in embedded processor synthesis (picoRISC case study)

- Develop and test ALU with typical operations: ADD,SUB, etc.
- Develop General Purpose Registers (GPR) and test
- Develop a simple Instruction Decoder and test with ALU and GPR
  - in the decoder implement NOP instruction, ALU instructions, LDI
- Develop Program Memory
- Develop Program Counter
- Enhance Instruction Decoder with J and typical conditional branches, e.g. BEQ,BLO etc.
- **Basic processor core is functional at this point**
- Possible enhancements:
  - Add data RAM
  - RAM related instructions, eg. LD, ST
  - Develop an I/O port, and implement in decoder IN and OUT instructions
  - Add ALU hardware to support MUL instruction and shift instructions
  - Subroutine calls and returns
- **Your coursework assignment:**
  - Modify the picoMIPS to implement a prescribed program
  - Write a formal report
  - Challenge: the smallest possible implementation on Altera Cyclone IV