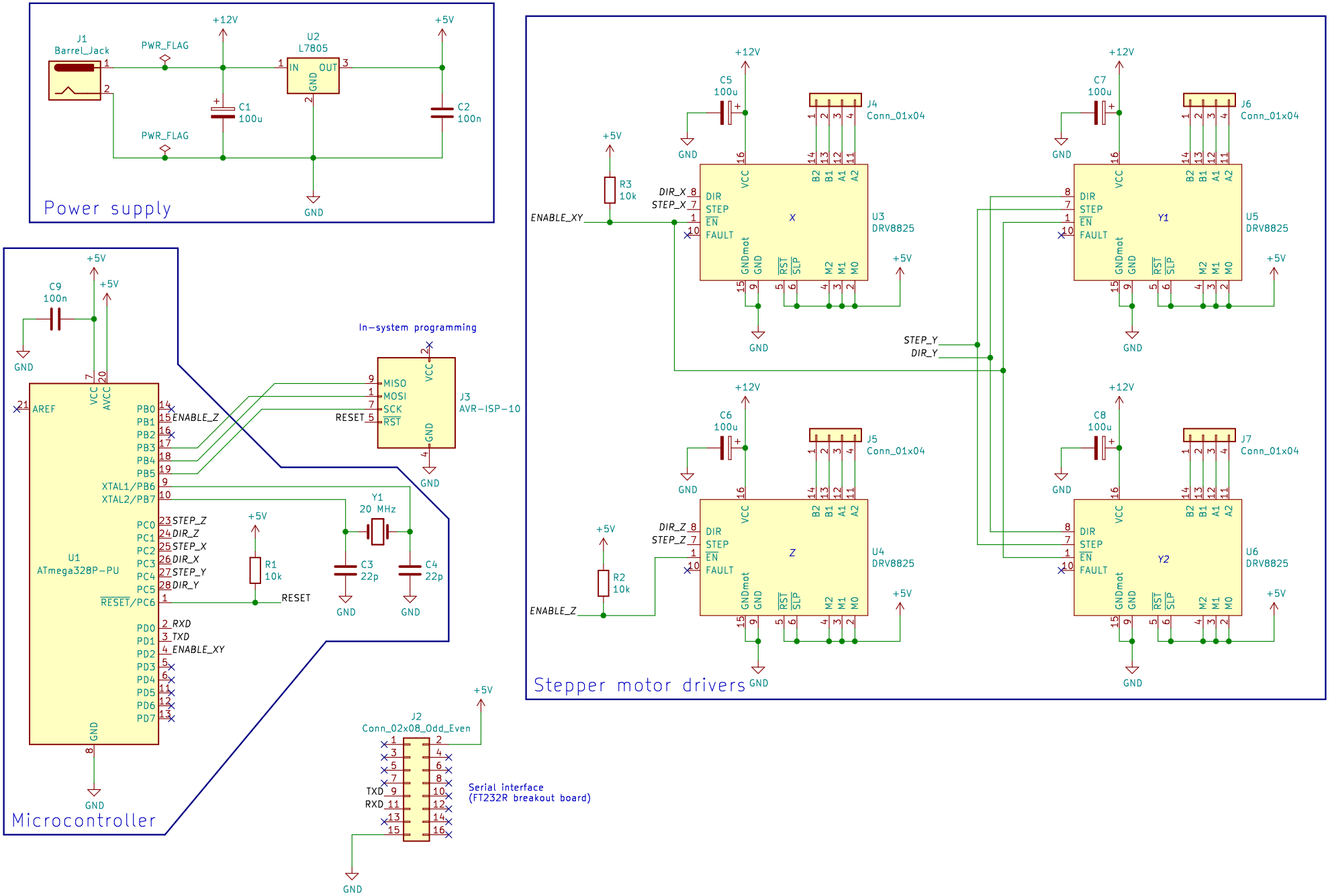
Power supply
J1
Barrel_Jack
PWR_FLAG
+12V
U2
L7805
IN
OUT
GND
+5V
C1
100u
C2
100n
Microcontroller
C9
100n
AREF
VCC
AVCC
U1
ATmega328P-PU
PB0
PB1
PB2
PB3
PB4
PB5
ENABLE_Z
XTAL1/PB6
XTAL2/PB7
PC0
PC1
PC2
PC3
PC4
PC5
RESET/PC6
STEP_Z
DIR_Z
STEP_X
DIR_X
STEP_Y
DIR_Y
PD0
PD1
PD2
PD3
PD4
PD5
PD6
PD7
RXD
TXD
ENABLE_XY
R1
10k
RESET
Y1
20 MHz
C3
22p
C4
22p
In-system programming
J3
AVR-ISP-10
MISO
MOSI
SCK
RST
J2
Conn_02x08_Odd_Even
Serial interface
(FT232R breakout board)
Stepper motor drivers
C5
100u
C6
100u
C7
100u
C8
100u
J4
Conn_01x04
J5
Conn_01x04
J6
Conn_01x04
J7
Conn_01x04
R3
10k
R2
10k
U3
DRV8825
U4
DRV8825
U5
DRV8825
U6
DRV8825
X
Z
Y1
Y2
DIR
STEP
EN
FAULT
GNDmot
RST
SLP
M2
M1
M0
B2
B1
A1
A2
DIR_X
STEP_X
DIR_Z
STEP_Z