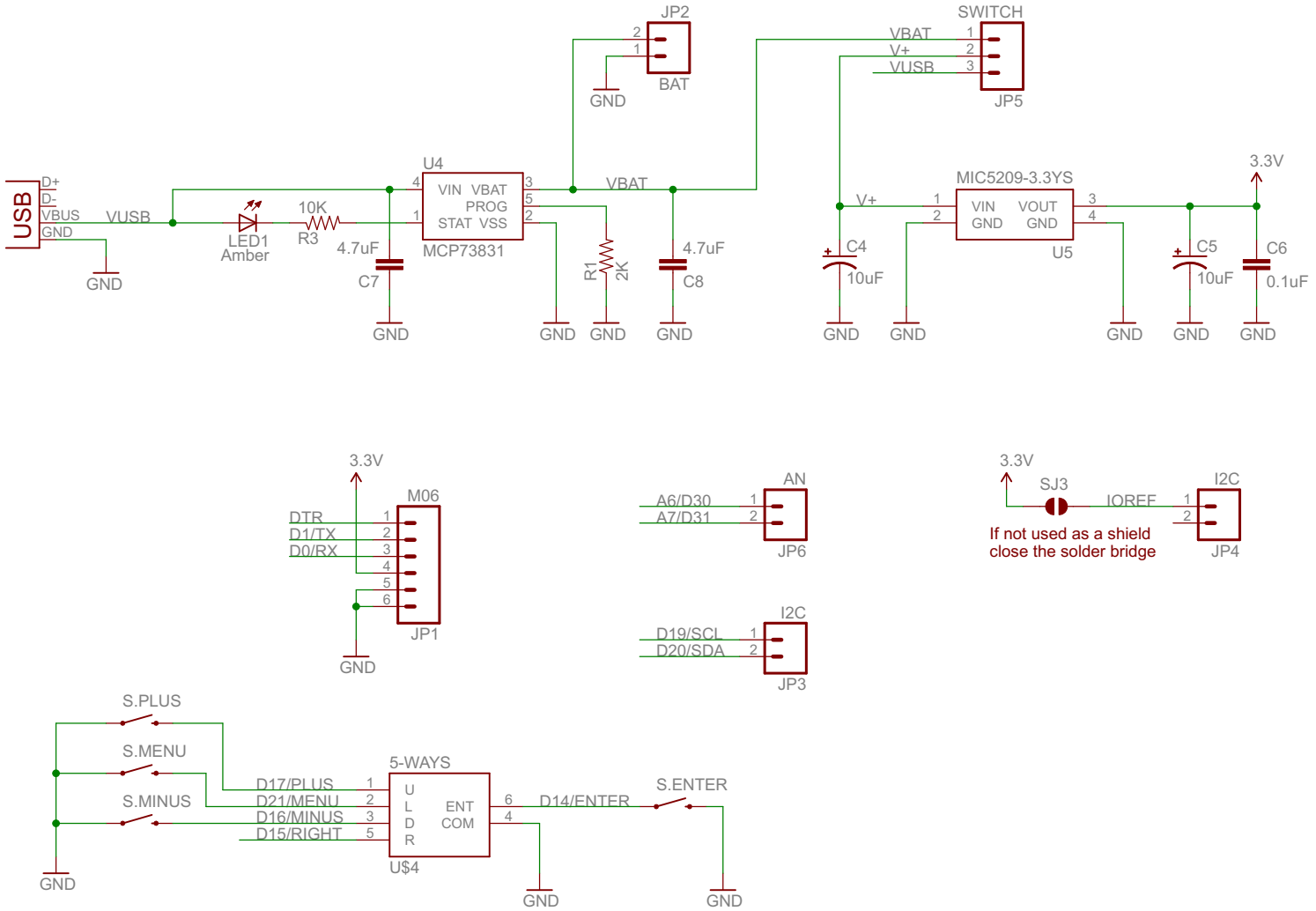


open hardware

ArduRCT project
http://code.google.com/p/ardurct

| | | |
|---|---|---|
| Title: TouScruino-avr-ui1-60 | Sheet: 2/2 | Rev.: |
| Auth.: LWX | Date: 25/09/2013 09:07:36 | |

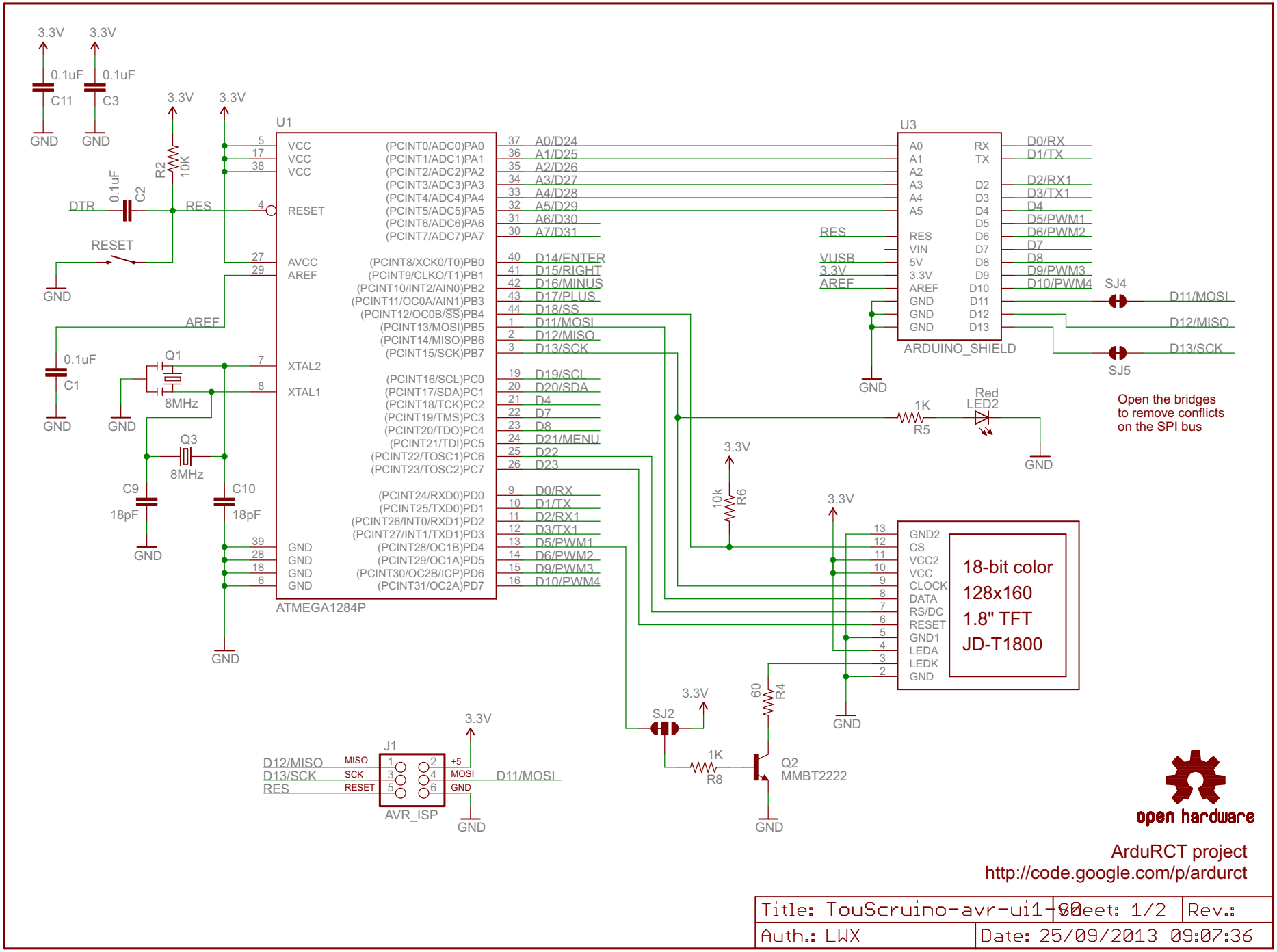
3.3V
0.1uF
C11
C3
GND
R2
10K
C2
DTR
RES
RESET
AREF
C1
Q1
8MHz
Q3
C9
18pF
C10
U1
VCC
AVCC
XTAL2
XTAL1
(PCINT0/ADC0)PA0
(PCINT1/ADC1)PA1
(PCINT2/ADC2)PA2
(PCINT3/ADC3)PA3
(PCINT4/ADC4)PA4
(PCINT5/ADC5)PA5
(PCINT6/ADC6)PA6
(PCINT7/ADC7)PA7
(PCINT8/XCK0/T0)PB0
(PCINT9/CLKO/T1)PB1
(PCINT10/INT2/AIN0)PB2
(PCINT11/OC0A/AIN1)PB3
(PCINT12/OC0B/SS)PB4
(PCINT13/MOSI)PB5
(PCINT14/MISO)PB6
(PCINT15/SCK)PB7
(PCINT16/SCL)PC0
(PCINT17/SDA)PC1
(PCINT18/TCK)PC2
(PCINT19/TMS)PC3
(PCINT20/TDO)PC4
(PCINT21/TDI)PC5
(PCINT22/TOSC1)PC6
(PCINT23/TOSC2)PC7
(PCINT24/RXD0)PD0
(PCINT25/TXD0)PD1
(PCINT26/INT0/RXD1)PD2
(PCINT27/INT1/TXD1)PD3
(PCINT28/OC1B)PD4
(PCINT29/OC1A)PD5
(PCINT30/OC2B/ICP)PD6
(PCINT31/OC2A)PD7
A0/D24
A1/D25
A2/D26
A3/D27
A4/D28
A5/D29
A6/D30
A7/D31
D14/ENTER
D15/RIGHT
D16/MINUS
D17/PLUS
D18/SS
D11/MOSI
D12/MISO
D13/SCK
D19/SCL
D20/SDA
D4
D7
D8
D21/MENU
D22
D23
D0/RX
D1/TX
D2/RX1
D3/TX1
D5/PWM1
D6/PWM2
D9/PWM3
D10/PWM4
ATMEGA1284P
U3
A0
A1
A2
A3
A4
A5
RES
VIN
5V
3.3V
AREF
GND
RX
TX
D2
D3
D4
D5
D6
D7
D8
D9
D10
D11
D12
D13
ARDUINO_SHIELD
VUSB
SJ4
SJ5
1K
R5
Red
LED2
10k
R6
GND2
CS
VCC2
VCC
CLOCK
DATA
RS/DC
RESET
GND1
LEDA
LEDK
18-bit color
128x160
1.8" TFT
JD-T1800
SJ2
60
R4
R8
Q2
MMBT2222
J1
MISO
SCK
RESET
+5
MOSI
AVR_ISP
Open the bridges
to remove conflicts
on the SPI bus
open hardware
ArduRCT project
http://code.google.com/p/ardurct
Title: TouScruino-avr-ui1-00
Sheet: 1/2
Rev.:
Auth.: LWX
Date: 25/09/2013 09:07:36