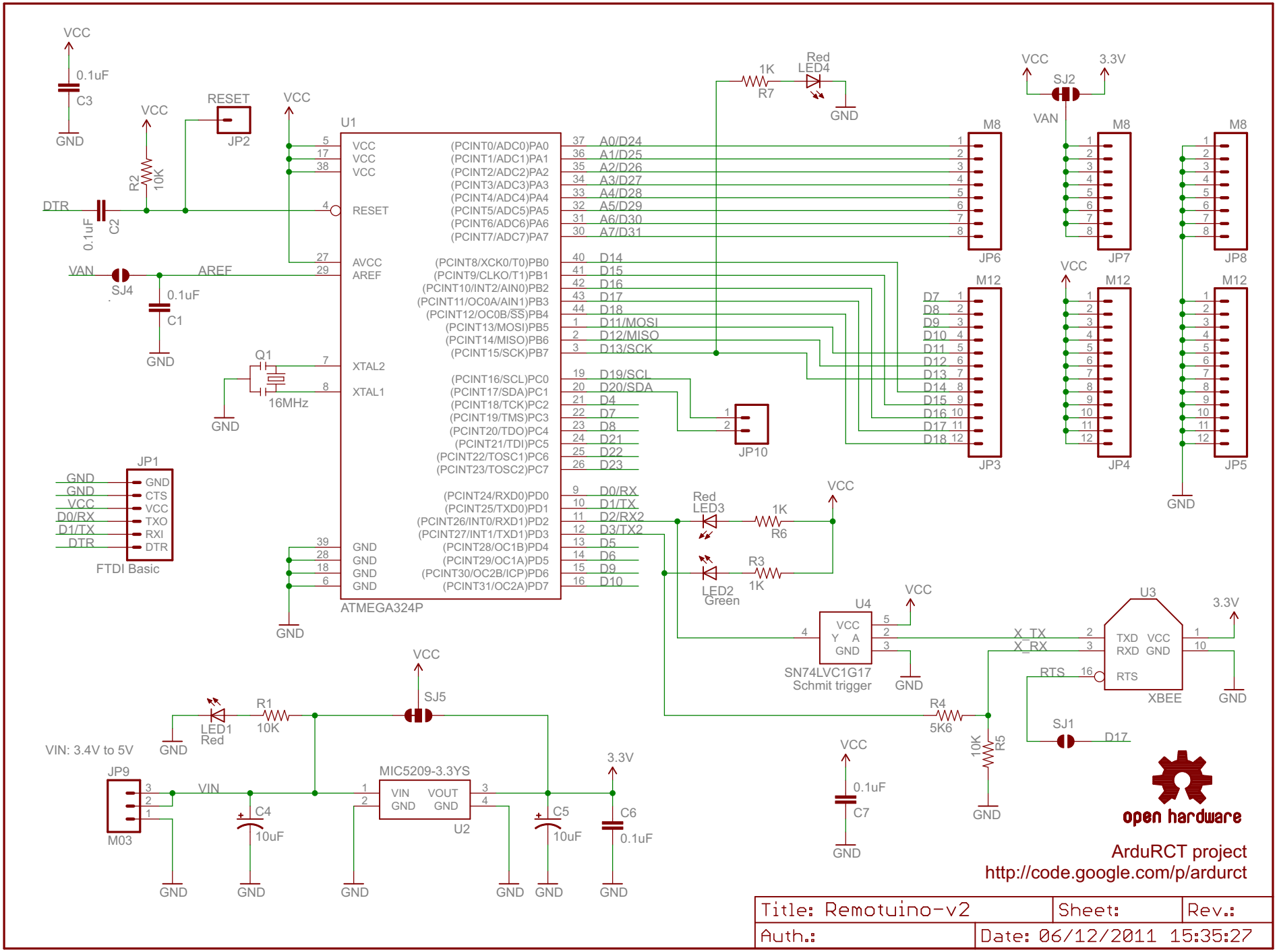
VCC
0.1uF
C3
GND
RESET
JP2
VCC
R2
10K
DTR
0.1uF
C2
VAN
SJ4
AREF
0.1uF
C1
GND
Q1
16MHz
GND
U1
VCC
VCC
VCC
RESET
AVCC
AREF
XTAL2
XTAL1
GND
GND
GND
GND
(PCINT0/ADC0)PA0
(PCINT1/ADC1)PA1
(PCINT2/ADC2)PA2
(PCINT3/ADC3)PA3
(PCINT4/ADC4)PA4
(PCINT5/ADC5)PA5
(PCINT6/ADC6)PA6
(PCINT7/ADC7)PA7
(PCINT8/XCK0/T0)PB0
(PCINT9/CLKO/T1)PB1
(PCINT10/INT2/AIN0)PB2
(PCINT11/OC0A/AIN1)PB3
(PCINT12/OC0B/SS)PB4
(PCINT13/MOSI)PB5
(PCINT14/MISO)PB6
(PCINT15/SCK)PB7
(PCINT16/SCL)PC0
(PCINT17/SDA)PC1
(PCINT18/TCK)PC2
(PCINT19/TMS)PC3
(PCINT20/TDO)PC4
(PCINT21/TDI)PC5
(PCINT22/TOSC1)PC6
(PCINT23/TOSC2)PC7
(PCINT24/RXD0)PD0
(PCINT25/TXD0)PD1
(PCINT26/INT0/RXD1)PD2
(PCINT27/INT1/TXD1)PD3
(PCINT28/OC1B)PD4
(PCINT29/OC1A)PD5
(PCINT30/OC2B/ICP)PD6
(PCINT31/OC2A)PD7
A0/D24
A1/D25
A2/D26
A3/D27
A4/D28
A5/D29
A6/D30
A7/D31
D14
D15
D16
D17
D18
D11/MOSI
D12/MISO
D13/SCK
D19/SCL
D20/SDA
D4
D7
D8
D21
D22
D23
D0/RX
D1/TX
D2/RX2
D3/TX2
D5
D6
D9
D10
ATMEGA324P
1K
R7
Red
LED4
GND
VCC
SJ2
3.3V
VAN
M8
JP6
JP7
JP8
M12
JP3
JP4
JP5
D7
D8
D9
D10
D11
D12
D13
D14
D15
D16
D17
D18
JP10
JP1
GND
GND
VCC
D0/RX
D1/TX
DTR
GND
CTS
VCC
TXO
RXI
DTR
FTDI Basic
Red
LED3
1K
R6
VCC
R3
1K
LED2
Green
U4
VCC
Y A
GND
SN74LVC1G17
Schmit trigger
GND
VCC
U3
3.3V
X_TX
X_RX
TXD VCC
RXD GND
RTS
RTS
XBEE
GND
R4
5K6
10K
R5
GND
SJ1
D17
VCC
0.1uF
C7
GND
VCC
SJ5
R1
10K
LED1
Red
GND
VIN: 3.4V to 5V
JP9
M03
VIN
C4
10uF
MIC5209-3.3YS
VIN VOUT
GND GND
U2
C5
10uF
3.3V
C6
0.1uF
GND
GND
GND
GND
GND
GND
open hardware
ArduRCT project
http://code.google.com/p/ardurct
Title: Remotuino-v2
Sheet:
Rev.:
Auth.:
Date: 06/12/2011 15:35:27