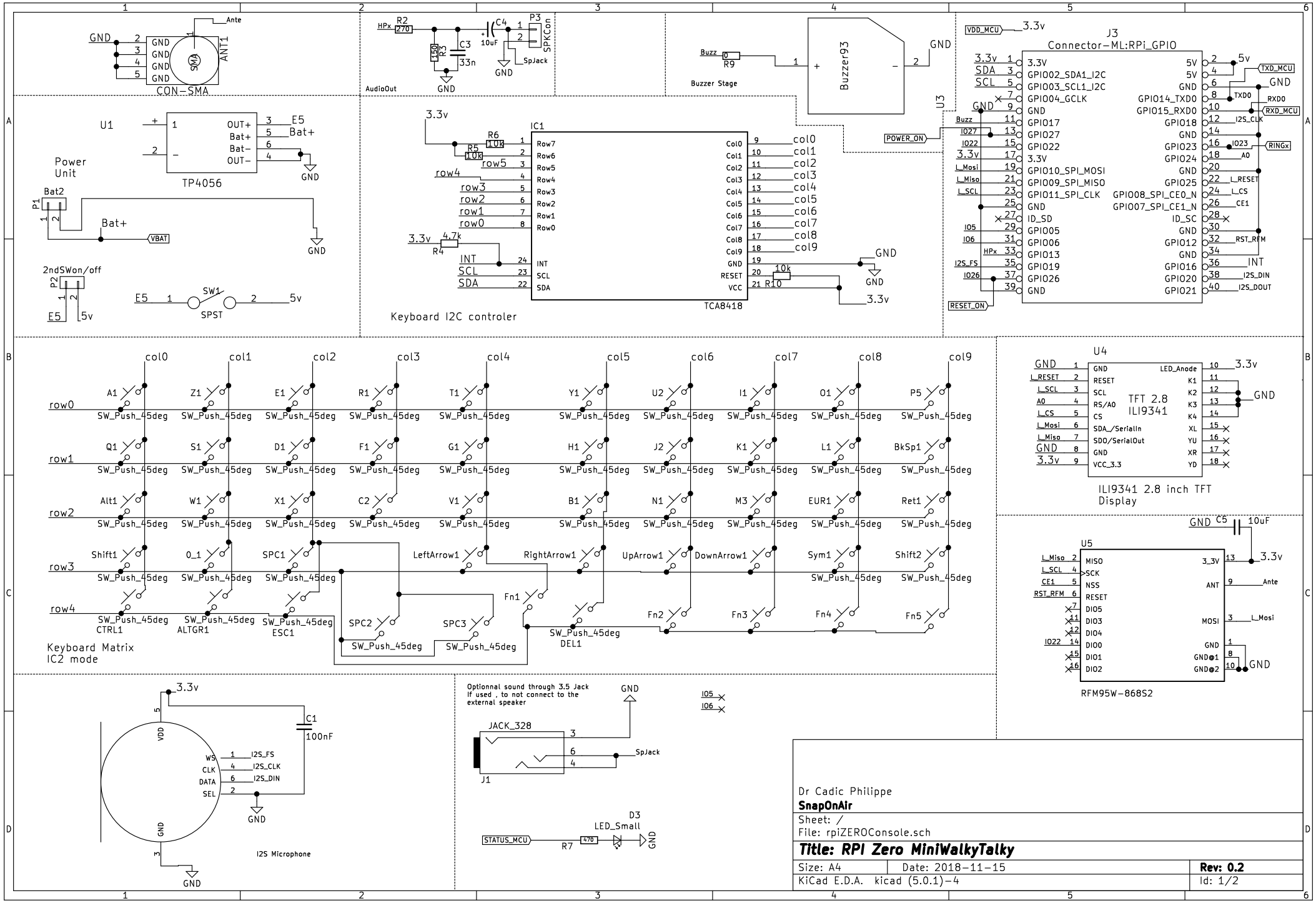

Dr Cadic Philippe

SnapOnAir

Sheet: /

File: rpiZEROConsole.sch

Title: RPI Zero MiniWalkyTalky

Size: A4	Date: 2018-11-15	**Rev: 0.2**
KiCad E.D.A. kicad (5.0.1)-4		Id: 1/2

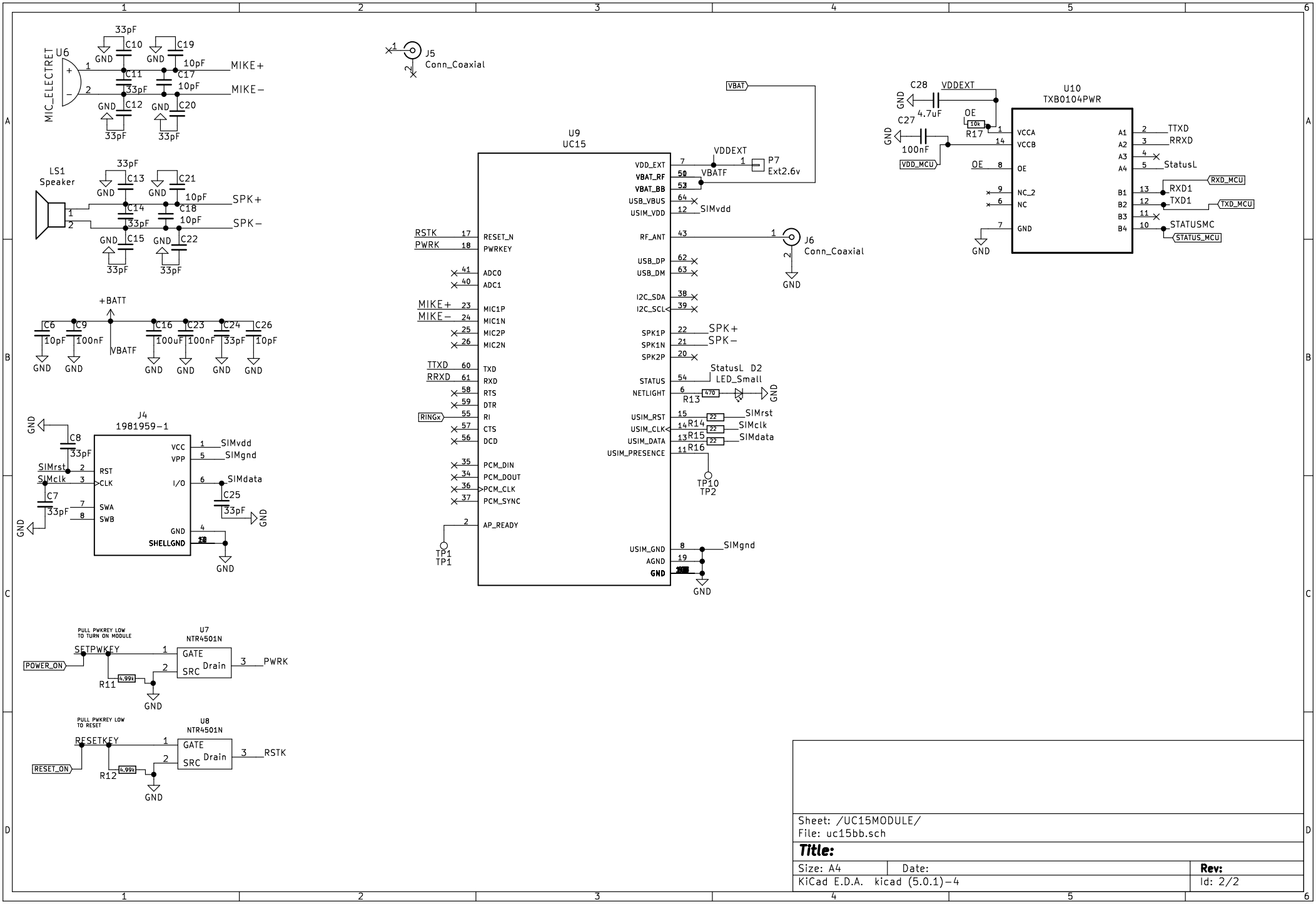

Sheet: /UC15MODULE/
File: uc15bb.sch

Title:

Size: A4	Date:	Rev:
KiCad E.D.A. kicad (5.0.1)-4		Id: 2/2