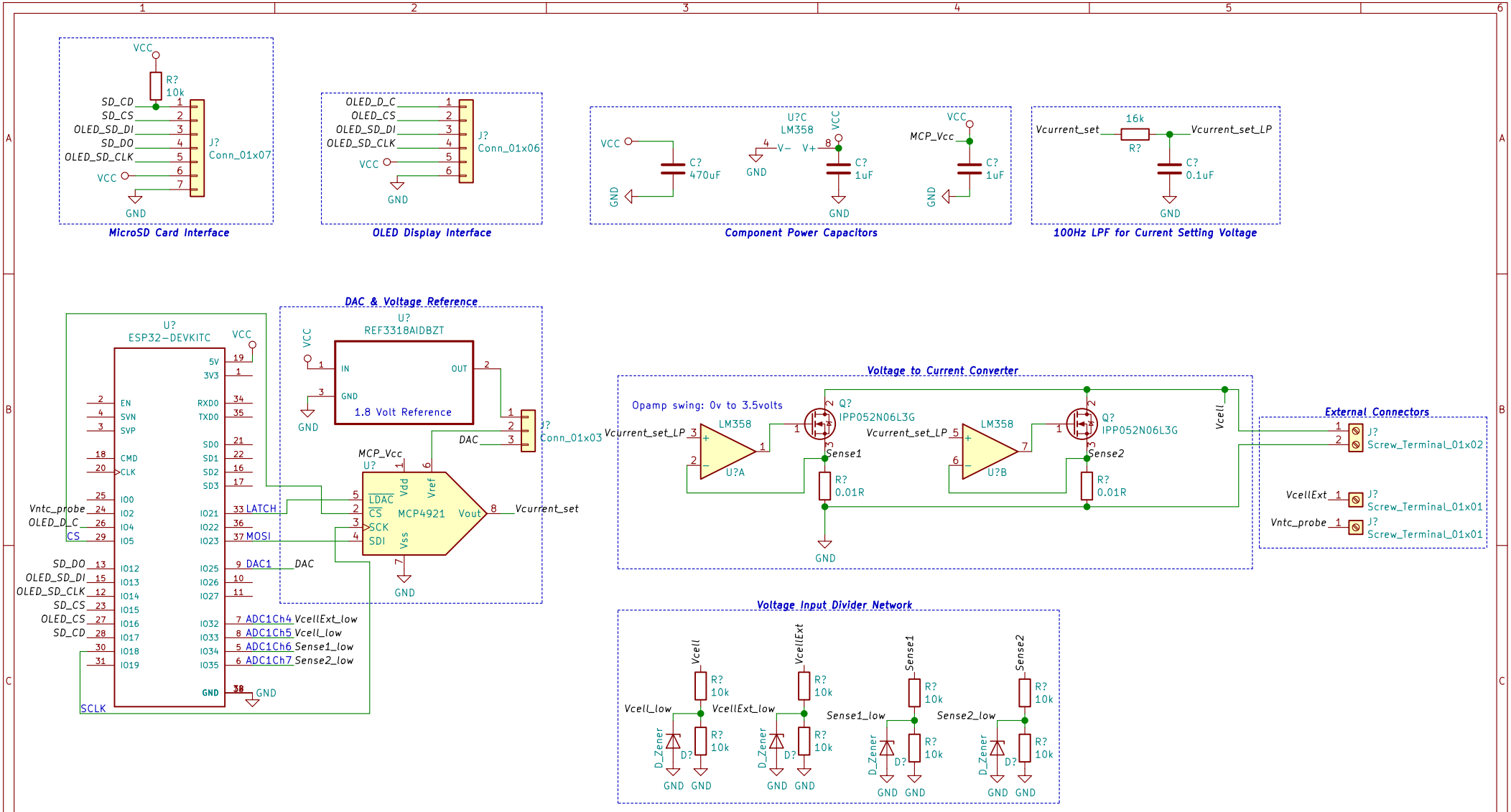

by Clement Hathaway
Lafayette College
Sheet: /
File: Active Load 2.5.sch

Title: Active Load 2.5

Size: A4	Date: 2019-09-29	**Rev: 2.5**
KiCad E.D.A. eeschema (5.1.4)-1		Id: 1/1