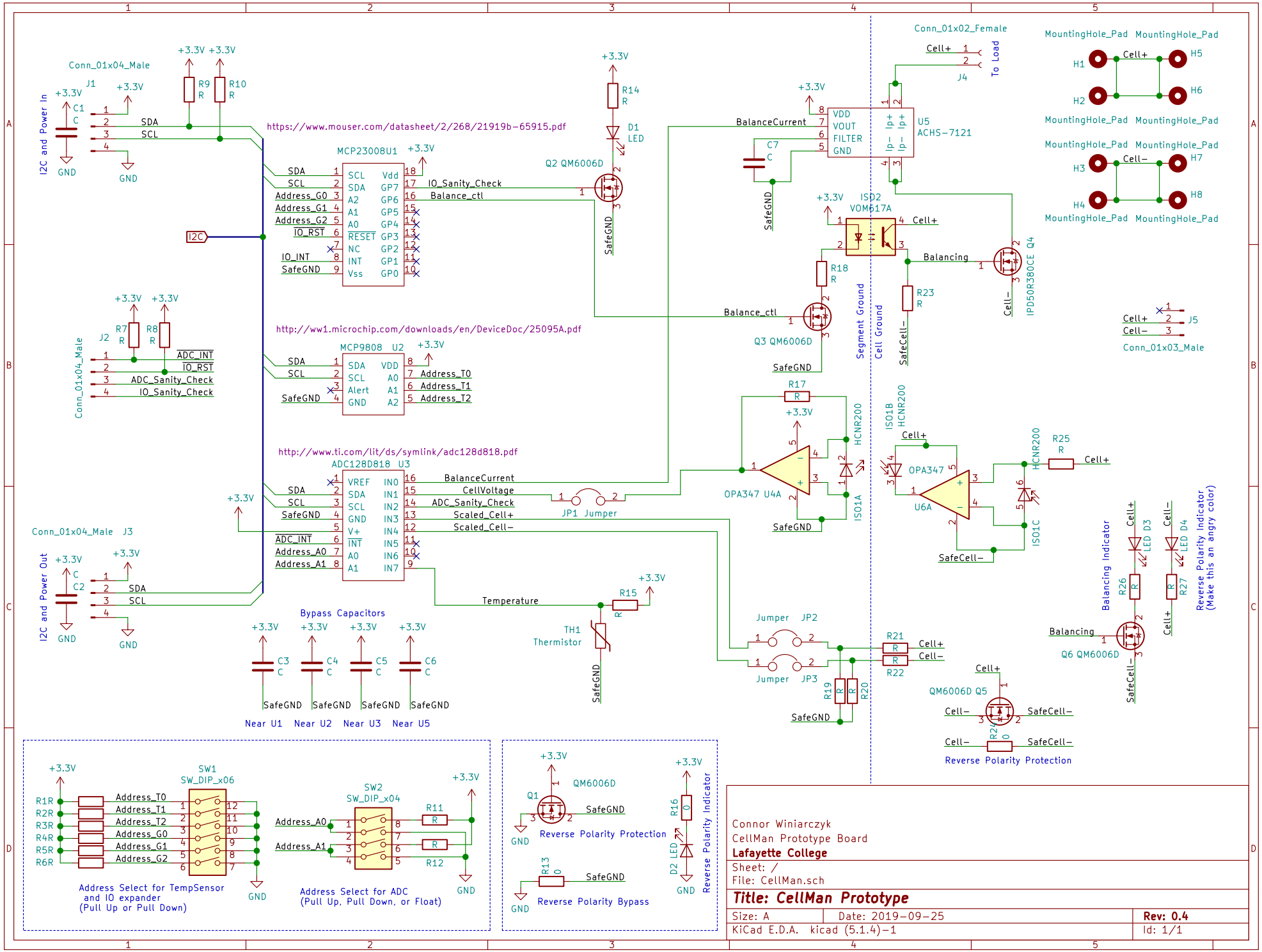
Conn_01x04_Male
J1
I2C and Power In
https://www.mouser.com/datasheet/2/268/21919b-65915.pdf
MCP23008U1
Q2 QM6006D
R14
D1 LED
Conn_01x02_Female
J4
To Load
U5 ACHS-7121
VDD
VOUT
FILTER
GND
BalanceCurrent
C7
SafeGND
ISO2 VOM617A
Balancing
R18
R23
Q3 QM6006D
Balance_ctl
Segment Ground
Cell Ground
SafeCell-
IPD50R380CE Q4
Cell-
MountingHole_Pad
H1
H2
H3
H4
H5
H6
H7
H8
Cell+
Cell-
J5
Conn_01x03_Male
Conn_01x04_Male
J2
R7
R8
ADC_INT
IO_RST
ADC_Sanity_Check
IO_Sanity_Check
http://ww1.microchip.com/downloads/en/DeviceDoc/25095A.pdf
MCP9808 U2
Address_T0
Address_T1
Address_T2
http://www.ti.com/lit/ds/symlink/adc128d818.pdf
ADC128D818 U3
CellVoltage
Scaled_Cell+
Scaled_Cell-
JP1 Jumper
R17
OPA347 U4A
HCNR200
ISO1A
ISO1B
ISO1C
OPA347 U6A
R25
Conn_01x04_Male J3
I2C and Power Out
C2
Temperature
R15
TH1 Thermistor
Bypass Capacitors
C3
C4
C5
C6
Near U1
Near U2
Near U3
Near U5
Jumper JP2
Jumper JP3
R19
R20
R21
R22
Balancing Indicator
R26
LED D3
R27
LED D4
Reverse Polarity Indicator (Make this an angry color)
Q6 QM6006D
QM6006D Q5
R24
Reverse Polarity Protection
SW1 SW_DIP_x06
Address_T0
Address_T1
Address_T2
Address_G0
Address_G1
Address_G2
R1R
R2R
R3R
R4R
R5R
R6R
Address Select for TempSensor and IO expander (Pull Up or Pull Down)
SW2 SW_DIP_x04
Address_A0
Address_A1
R11
R12
Address Select for ADC (Pull Up, Pull Down, or Float)
Q1
QM6006D
R13
Reverse Polarity Bypass
R16
D2 LED
Reverse Polarity Indicator
Connor Winiarczyk
CellMan Prototype Board
Lafayette College
Sheet: /
File: CellMan.sch
Title: CellMan Prototype
Size: A
Date: 2019-09-25
Rev: 0.4
KiCad E.D.A. kicad (5.1.4)-1
Id: 1/1