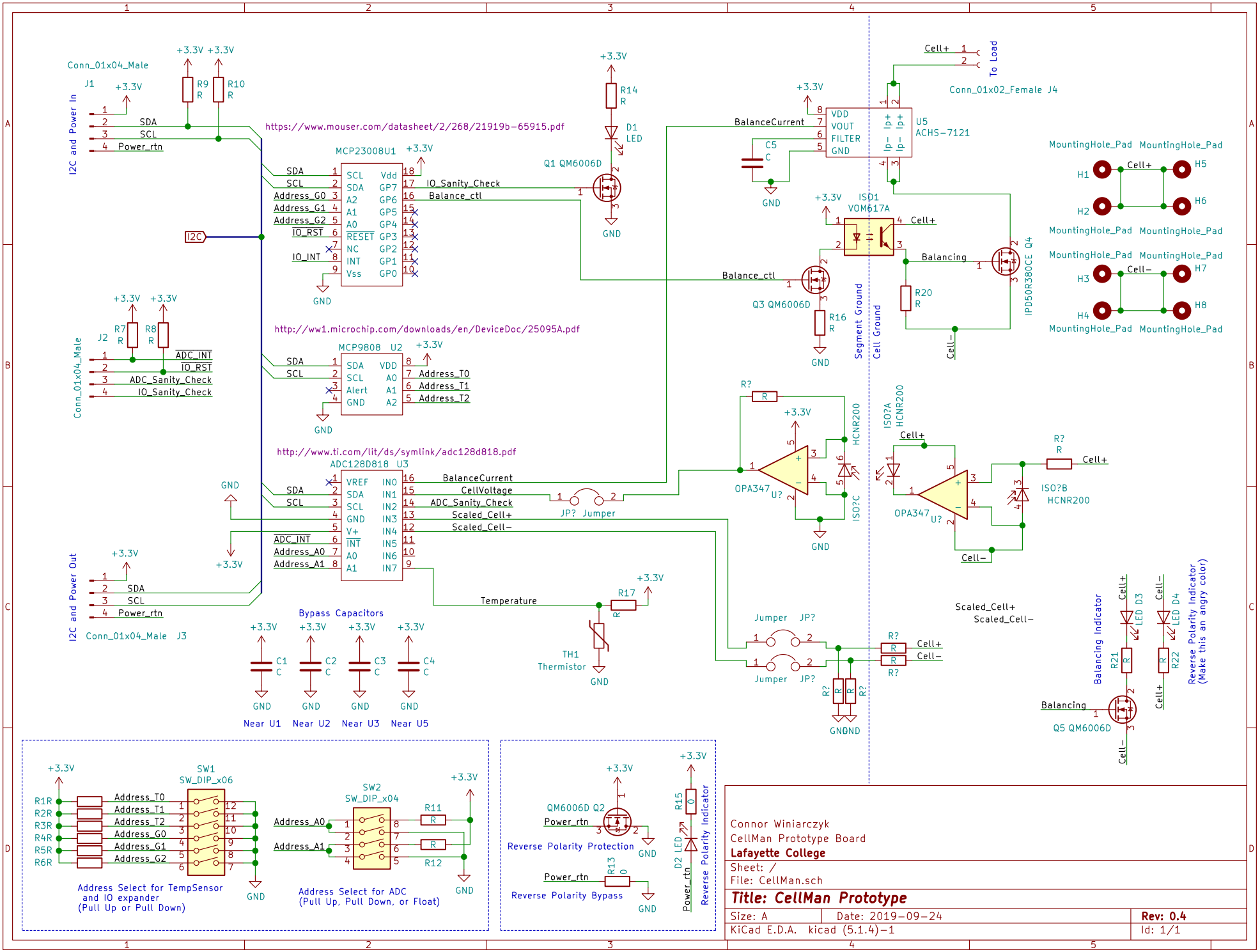

Connor Winiarczyk
CellMan Prototype Board
Lafayette College

Sheet: /
File: CellMan.sch

Title: CellMan Prototype

Size: A	Date: 2019-09-24	Rev: 0.4
KiCad E.D.A. kicad (5.1.4)-1		Id: 1/1