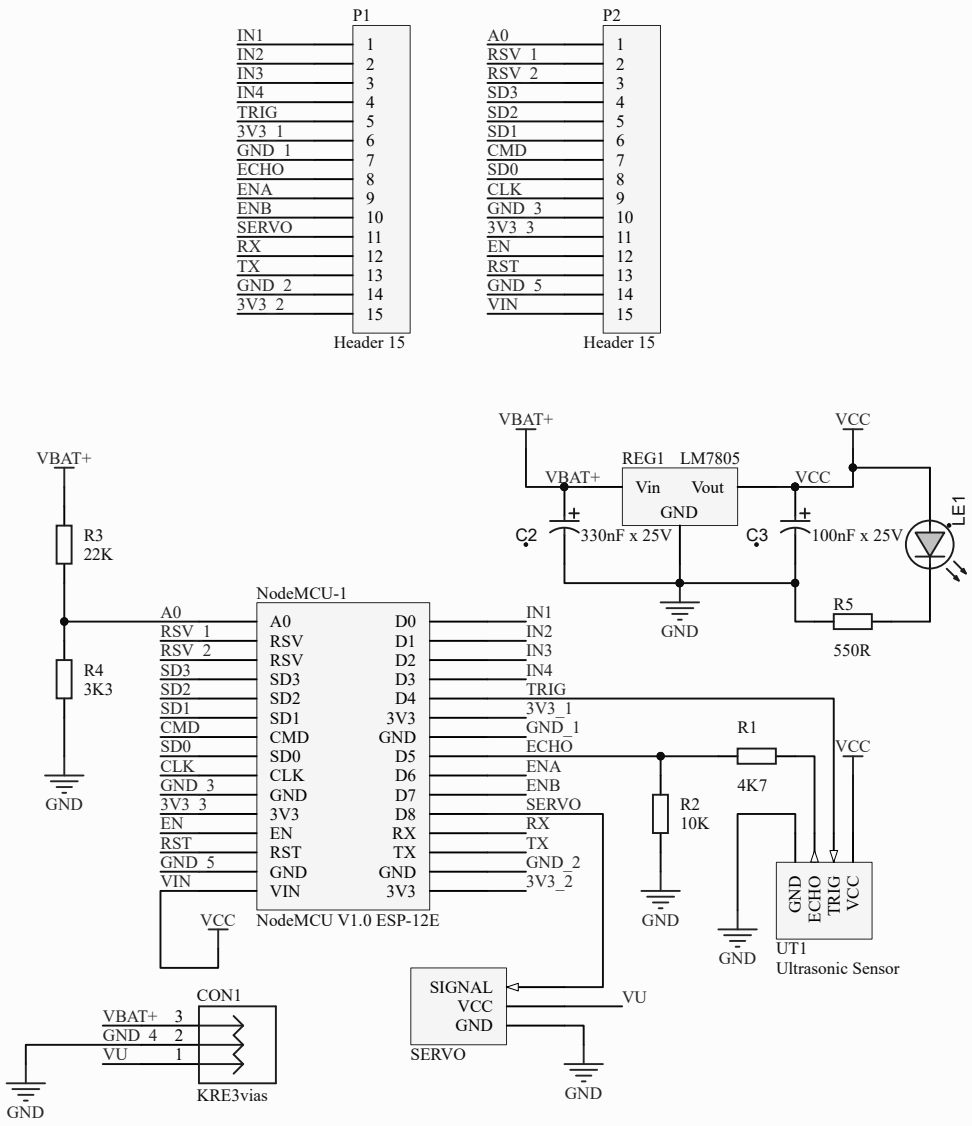

Title *WiFiCar V1.0*		
Size: A4	Author: Álvaro Henrique	Revision:1
Date: 11/08/2020 Time: 01:53:32	Sheet 1 of 1	
File: D:\GitHub\WifiCar\WifiCar-PCB\WiFiCar.SchDoc		