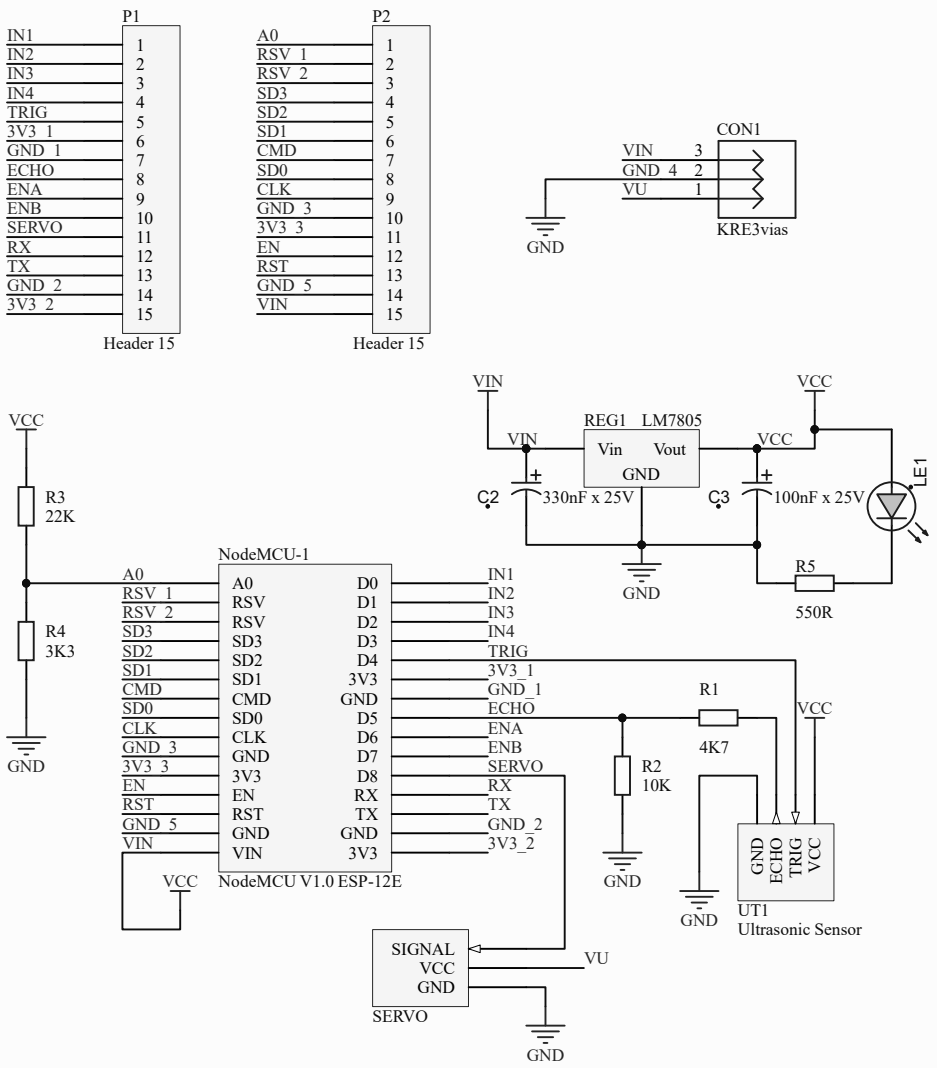

Title ***WiFiCar V1.0***		
Size: A4	Author: Álvaro Henrique	Revision:1
Date: 12/05/2020 Time: 20:56:23	Sheet 1 of 1	
File: D:\GitHub\WifiCar\WifiCar-PCB\WiFiCar.SchDoc		