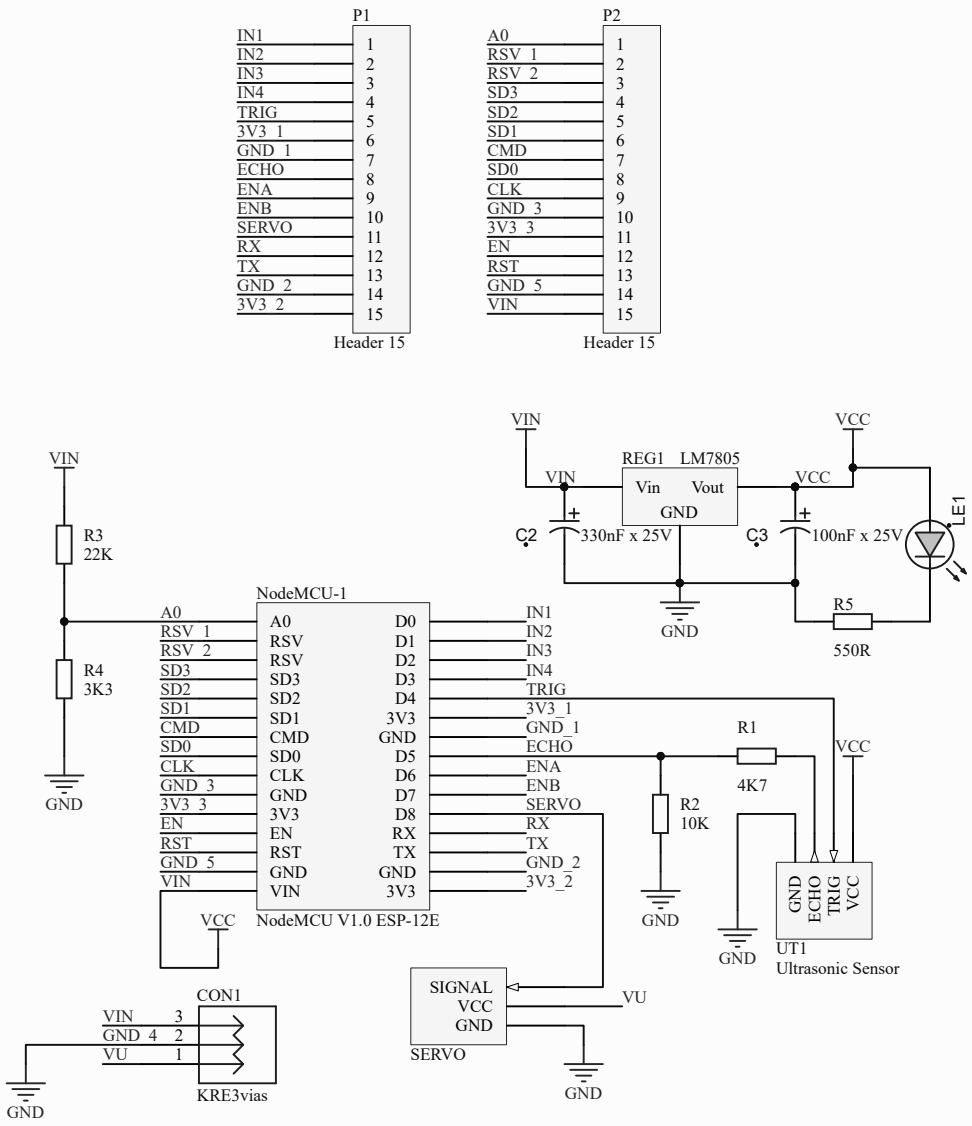


| | | |
|---|---|---|
| Title ***WiFiCar V1.0*** | | |
| Size: A4 | Author: Álvaro Henrique | Revision:1 |
| Date: 08/08/2020 Time: 23:19:15 | Sheet1 of 1 | |
| File: D:\GitHub\WifiCar\WifiCar-PCB\WiFiCar.SchDoc | | |