INDIAN SPACE RESEARCH ORGANISATION

U R RAO SATELLITE CENTRE

Old Airport Road, Vimanpura Post Bangalore, Karnataka- 560017

TITLE

STUDY ON DESIGN FOR RELIABILITY CONSIDERATION OF SoC FOR SPACE APPLICATION

DURATION: 09-10-25 TO 21-11-25

SUBMITTED BY

S LAKSHMI PRIYA (T250636)

UNDER THE GUIDANCE OF

Ms. Ekta Gangwar

U.R. Rao Satellite Centre, Indian Space Research Organisation, HAL Airport Road, Vimanpura Post, Bangalore, Karnataka - 560017

INTERNSHIP PROJECT REPORT FILE

BONAFIDE CERTIFICATE

Certified that this Report titled "STUDY ON DESIGN FOR RELIABILITY CONSIDERATION OF SoC FOR SPACE APPLICATION" is the Bonified work carried by **Lakshmi Priya S(T250636)** in complete fulfilment of the internship in the 7th semester, Bachelor of Engineering- Electronics Engineering at GLOBAL ACADEMY OF TECHNOLOGY year 2022-2026 who carried out the work under my supervision.

SHIVAKUMAR HEDGAPURE	**EVANGELIN L JUSTIN**	**EKTA GANGWAR**
DIVISION HEAD	***SECTION HEAD***	***ENGINEER***
DCAD/RQHG	**BDSATS/RQHG**	**BDSATS/RQHG**

Y.L. MADHUSUDAN

GROUP DIRECTOR

RQHG

U R Rao Satellite Centre,
INDIAN SPACE RESEARCH ORGANISATION
Old Airport Road, Vimanpura Post Bangalore,
Karnataka- 560017.

ACKNOWLEDGEMENT

An internship is a crucial component of an engineering student's journey, bridging the gap between theoretical knowledge and practical application. This practical exposure enhances our technical understanding and better prepares us for the challenges of the professional world.

I would like to express my sincere gratitude to all those who have supported and guided me throughout the development of this project.

Firstly, I am profoundly grateful to Ms. Evangelin L. Justin, Section Head, BDSATS/RQHG, for her exceptional mentorship and for providing me with the opportunity to work on this challenging and rewarding project under the Reliability and Quality Assurance Hardware Group at ISRO/URSC, Bangalore. Her profound knowledge and experience have greatly contributed to the depth and quality of this research.

My sincere appreciation goes to Ms. Ekta Gangwar, Engineer, BDSATS/RQHG, for her valuable guidance, technical inputs, and constant encouragement, which significantly aided the progress of this work.

I also extend my heartfelt thanks to Mr. Shivakumar Hedgapure, Division Head, DCAD/RQHG, for his invaluable guidance, encouragement, and insightful suggestions throughout the course of this project.

I would also like to extend my heartfelt thanks to Mr. Y. L. Madhusudan, Group Director, RQHG, for his invaluable guidance, encouragement, and insightful suggestions throughout the course of this project.

Thank you all.

S LAKSHMI PRIYA.

TABLE OF CONTENT

1. Abstract

2. Glossary

3. Introduction

4. Avionics Systems Platform and Mission Development Considerations

5. State-of-the-Art: Command and Data Handling

   5.1. Avionics and Onboard Computing Form Factors
   5.2. Highly Integrated Onboard Computing Products
   5.3. Radiation-Hardened Processors
   5.4. Memory, Electronic Function Blocks, and Components
   5.5. Bus Electrical Interfaces
   5.6. Radiation Mitigation and Tolerance Schemes

6. PCB Quality and Screening Standards

7. Reliability of Electronic Components

   7.1. Overview
   7.2. Requirements of Derating
   7.3. Methodology / Approach

8. Reliability Analysis & Standards

   8.1. Failure Mode and Effects Analysis
   8.2. Worst-Case Circuit Analysis

9. Case Study

10. References

1.ABSTRACT

The payloads in a spacecraft are the mission-specific instruments responsible for achieving the primary objectives of the mission. These payloads perform critical functions such as data acquisition, observation, and measurement. In earth observation satellites, for instance, payloads like cameras capture images or data from the Earth's surface, which are then transferred to the on-board data handling system in digital form.

The data handling subsystem plays a vital role in managing, processing, and organizing the data received from payloads. It performs functions such as data pre-processing, error correction, data formatting, and prioritization before the information is transmitted to the Radio Frequency (RF) subsystem for modulation, demodulation, and further downlink communication.

The present work focuses on the data handling segment, with emphasis on the derating analysis of critical electronic components such as FPGA (Field Programmable Gate Array), Flash Memory, ADC (Analog to Digital Converter), Load Switch, Temperature Sensor, and Oscillator used within the IAP (Integrated Avionics Package) package. The IAP system incorporates CBSP-1 (Communication, Baseband, Storage & Positioning) cards that contain these circuits. Derating ensures that components operate below their maximum rated limits, enhancing reliability under the harsh space radiation environment.

In addition, the work involves the development of design and layout guidelines for System-on-Chip (SoC) devices to facilitate effective integration of digital and RF modules within a single platform. Reliability prediction of the SoC is also carried out to assess long-term performance and ensure mission success in space applications.

2. GLOSSARY

- **System-on-Chip (SoC)**: An integrated circuit that consolidates all components of a computer or electronic system—such as processors, memory, input/output ports, and communication interfaces—onto a single chip. SoCs enable compact, power-efficient, and high-performance designs suitable for complex applications like satellite payloads.
- **Space Radiation Environment**: The natural radiation present in space, primarily consisting of high-energy particles such as protons, electrons, and heavy ions originating from the Sun (solar flares), galactic cosmic rays, and trapped particles in Earth's magnetic field. These radiations can adversely affect electronic components used in spacecraft.
- **Single Event Effects (SEE**): Unintended changes in electronic circuit behaviour caused by the impact of a single high-energy particle. SEEs include phenomena such as single event upset (SEU), single event latch-up (SEL), and single event burnout (SEB), which can temporarily or permanently disrupt system functionality.
- **Radiation Hardness Assurance (RHA)**: A structured process of ensuring that electronic components and systems can operate reliably in radiation-prone environments. It includes part selection, testing, shielding, and design verification to achieve required levels of radiation tolerance for space missions.
- **Fault Tolerance Techniques**: Design strategies implemented to allow a system to continue functioning correctly even in the presence of faults or failures. Common techniques include redundancy, error detection and correction (EDAC), watchdog timers, and reconfiguration mechanisms.
- **Derating Analysis**: A reliability engineering approach that involves operating components below their maximum rated electrical, thermal, or mechanical limits to enhance longevity and reduce the probability of failure, particularly under harsh conditions such as those encountered in space.
- **Integrated Analog and Digital Processing (IAP):** A design approach or module in which both analog and digital signal processing functions are integrated within the same chip or subsystem. In satellite systems, IAP enables efficient data conversion, filtering, modulation, and control within a compact and power-optimized architecture.

3. INTRODUCTION

System-on-Chip (SoC) refers to the integration of all functional components of a computer or electronic system into a single integrated circuit (chip). It combines digital, analog, mixed-signal, and radio-frequency (RF) functionalities onto a single silicon substrate, enabling compact, power-efficient, and high-performance designs suitable for space applications.

A typical SoC may consist of:

- One or more microcontrollers, microprocessors, or DSP (Digital Signal Processing) cores.
- Multiprocessor SoCs (MPSoCs) that include multiple processing cores for parallel operations.
- Memory blocks such as ROM (Read Only Memory), RAM (Random Access Memory), EEPROM (Electrical Erasable Read Only Memory), and Flash for data storage and retrieval.
- Timing sources including oscillators and phase-locked loops (PLLs).
- Peripheral modules like timers, counters, and reset generators.
- External interfaces such as USB (Universal Serial Bus), Ethernet, SPI (Serial Peripheral Interface), UART (Universal Asynchronous Receiver/Transmitter), and I^2C (Inter-Integrated Circuit) for communication.
- Analog interfaces including ADCs and DACs for signal conversion.
- Voltage regulators and power management circuits for stable operation.

These functional blocks are interconnected through either proprietary or industry-standard buses such as the AMBA (Advanced Microcontroller Bus Architecture) bus from ARM (Advanced RISC Machines). Direct Memory Access (DMA) controllers facilitate high-speed data transfer between peripherals and memory, bypassing the processor core to enhance throughput.

SoC technology plays a significant role in modern spacecraft avionics, particularly in payload data handling systems, where compactness, speed, and reliability are essential. By integrating both digital and RF circuits on a single chip, SoCs minimize interconnection losses, reduce signal delay, and improve system-level performance.

Data Handling Subsystem

The Data Handling System is one of the most critical elements in spacecraft avionics. It is responsible for collecting, managing, processing, formatting, and transmitting data obtained from the payload instruments to the ground station through the RF communication chain as shown in the figure 1.

Functions of the data handling subsystem include:

- Acquisition of payload data from instruments such as cameras and sensors.
- Data pre-processing, including compression and calibration.
- Error detection and correction to ensure data integrity.
- Data formatting and prioritization based on mission requirements.
- Transfer of processed data to the RF subsystem for modulation, demodulation, and downlink transmission.

This work centers on the data handling domain of the Integrated Avionics Package (IAP), with particular emphasis on conducting a comprehensive derating assessment of critical electronic components embedded within the CBSP-1 (Communication, Baseband, Storage & Positioning) cards. These cards form the backbone of command execution, system monitoring, and housekeeping data acquisition within the avionics architecture, making the reliability of their constituent circuits vital for overall mission success. By analysing the operating limits of devices under different electrical and thermal stresses, the study ensures that each component is evaluated against its recommended derating criteria.

Key elements such as the FPGA, Flash Memory, ADC, Load Switch, Temperature Sensor, and Oscillator are systematically examined to verify that they operate within safe operating margins. This verification is essential for preventing component overstress, reducing the likelihood of premature failures, and improving the long-term durability of the avionics system. The derating process helps identify potential vulnerabilities early in the design phase, allowing necessary corrective actions to enhance reliability.

In parallel, detailed design and layout guidelines for System-on-Chip (SoC) integration are formulated, covering both Digital and RF functional blocks. These guidelines address challenges related to signal integrity, power distribution, electromagnetic compatibility, and

radiation susceptibility issues that are particularly critical in space-qualified SoC architectures. Proper adherence to these guidelines ensures optimized implementation and seamless coexistence of mixed-signal modules within a single chip.

To complement these design considerations, a reliability prediction analysis is performed to estimate degradation mechanisms and failure trends under prolonged exposure to the space radiation environment. The assessment takes into account effects such as total ionizing dose (TID), displacement damage, and single-event phenomena, offering a quantitative understanding of component behaviour over the mission duration. This predictive insight plays a crucial role in determining appropriate safety margins and design strategies for long-term operation.

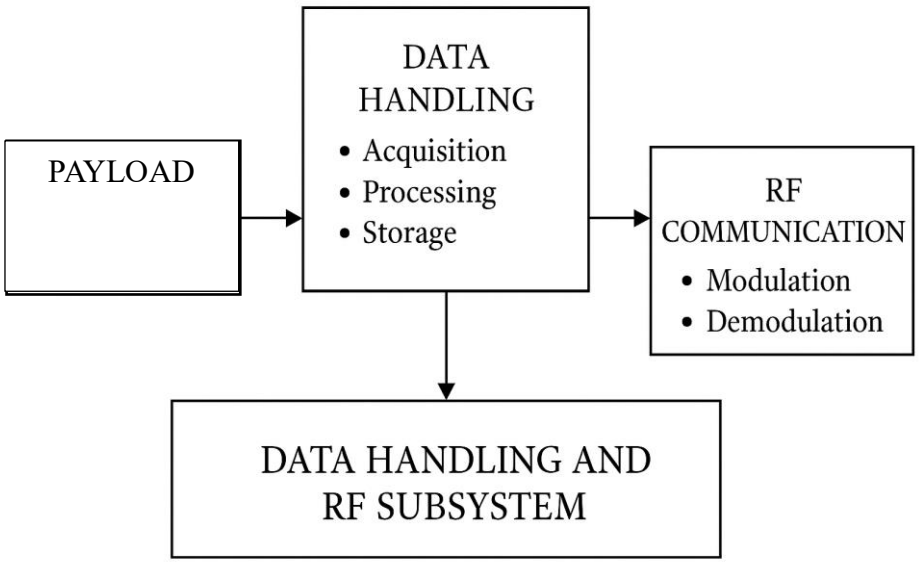

Figure 1: Data Handling System

4. Avionics Systems Platform and Mission Development Considerations

The design and selection of avionics systems for spacecraft require careful evaluation of various performance, reliability, and environmental factors to ensure successful mission operation. Avionics platforms form the central backbone of the spacecraft, enabling command, control, communication, and data handling. The development approach must align with the mission objectives while maintaining efficiency in Size, Weight, and Power (SWaP).

Key considerations in the development of avionics systems include:

- **Mission Relevance and Adaptability:** Avionics configurations must be tailored to meet the functional and operational requirements of each mission type whether scientific observation, communication, or Earth imaging.
- **Subsystem Modularity and Interoperability:** The use of modular components allows easy integration and reconfiguration of subsystems such as Onboard Computers (OBC), sensors, and communication units. This modularity improves scalability and reduces design complexity.
- **Manufacturing Efficiency and Reliability:** Avionics systems are designed for manufacturability with high consistency, reduced component variability, and proven reliability, especially under launch vibrations and thermal cycling.
- **Environmental Robustness:** Space missions expose avionics to intense radiation, extreme temperatures, and vacuum conditions. Thus, radiation-hardened components, shielding strategies, and fault-tolerant designs are essential.
- **Regulatory and Standardization Compliance:** The systems must adhere to international aerospace standards for safety, electromagnetic compatibility, and data communication protocols.
- **SWaP Optimization:** Balancing performance while minimizing power consumption, weight, and volume is crucial for mission cost efficiency and payload accommodation.

Modern avionics systems often use integrated architectures combining digital processing, sensor interfaces, and communication control within compact System-on-Chip (SoC) platforms as shown in figure 2. These architectures improve processing speed, reliability, and redundancy through hardware software co design.

Additionally, mission development involves validating avionics through simulation, fault analysis, and redundancy modeling. For small satellite missions, both federated and integrated architectures are employed federated systems provide subsystem autonomy, whereas integrated ones enable shared data processing and real-time coordination.

As satellite constellations and swarm missions advance, avionics platforms must evolve to enable autonomous operation, inter-satellite communication, and coordinated mission control. Each satellite should function intelligently, making real-time decisions and sharing data with others to optimize mission performance. This interconnected network approach replaces isolated spacecraft operations, allowing collaborative task execution and resource management. Advanced avionics now integrate AI, machine learning, and adaptive communication systems to enhance autonomy and reliability. These technologies ensure efficient coordination, fault tolerance, and scalability, enabling satellites to operate collectively as a smart, synchronized system that achieves complex mission goals with minimal ground intervention

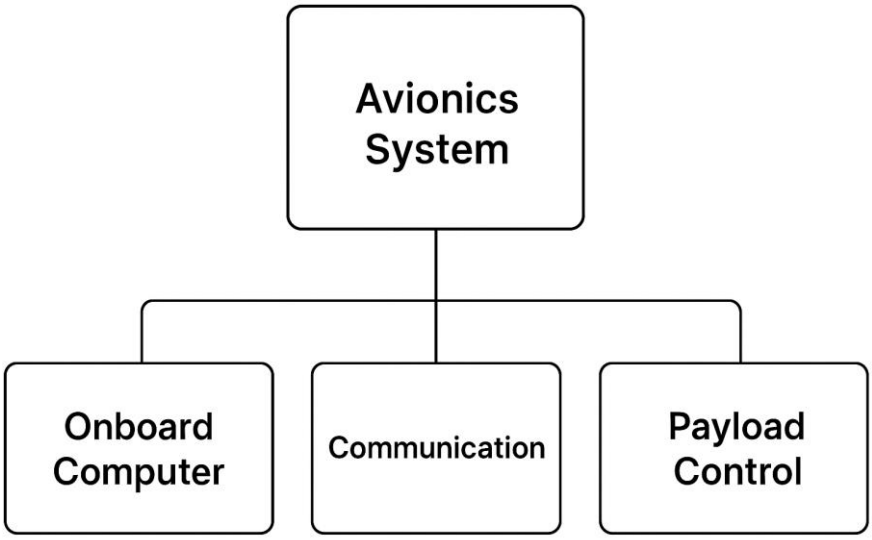

Figure 2: Avionics system platform consideration

5. State-of-the-Art: Command and Data Handling

Recent advancements in Command and Data Handling (CDH) for small satellites emphasize compact, modular, and radiation-tolerant computing architectures. Unlike traditional monolithic designs, current CDH systems integrate processing, storage, communication, and control functions within a single, scalable platform to optimize mass and power efficiency. The focus has shifted from merely handling telemetry to enabling on-board intelligence, autonomy, and adaptive data prioritization.

The use of System-on-Chip (SoC) and Field-Programmable Gate Arrays (FPGAs) has become common to manage both high-speed payload data and spacecraft housekeeping tasks. These hybrid processors provide flexibility for mission-specific configurations and permit real-time data preprocessing such as compression and feature extraction, significantly reducing the downlink bandwidth requirements. Open-source flight software frameworks and reusable middleware further accelerate development while maintaining mission reliability.

Commercial-off-the-shelf (COTS) components are increasingly employed due to cost and performance benefits, complemented by radiation-mitigation strategies such as Error Correction Codes (ECC), Triple Modular Redundancy (TMR), and watchdog recovery mechanisms. For longer-duration or deep-space missions, selective use of radiation-hardened components ensures sustained performance under harsh environments as illustrated in figure 3.

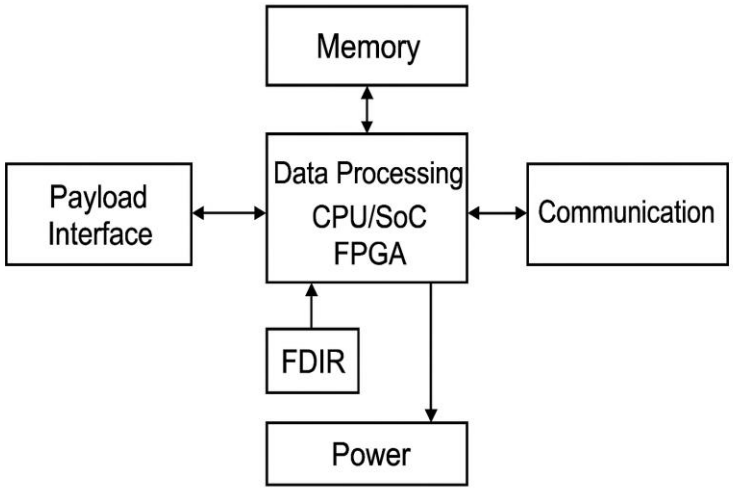

Figure 3: Command and data handling

Modern CDH architectures emphasize distributed processing, where subsystem-level controllers handle localized operations while the central unit manages global coordination. This approach improves fault isolation and enhances system flexibility. Typical data flow within a spacecraft includes sensor data acquisition, preprocessing, temporary buffering, prioritized storage, downlink scheduling. Integration with communication subsystems ensures that high-priority data (health telemetry, navigation) are transmitted with minimal delay.

Advances in on-board storage, such as high-density flash, along with high-speed bus interfaces (I^2C, SpaceWire), support seamless connectivity between subsystems. Furthermore, real-time operating systems (RTOS) and layered software designs improve scheduling predictability and simplify verification.

The next phase of Command and Data Handling (CDH) system development is shifting toward greater autonomy, intelligence, and adaptability to meet the demands of modern space missions. Future CDH architectures are expected to incorporate autonomous fault management, enabling spacecraft to detect, isolate, and recover from faults in real time without relying on constant ground control. Adaptive reconfiguration will allow onboard systems to dynamically adjust their operations, reroute data paths, or reassign processing resources in response to changing mission conditions or hardware anomalies.

A key advancement driving this evolution is the integration of AI-assisted decision systems, which empower spacecraft to analyze mission data, identify patterns, and make informed operational choices independently. This capability not only improves mission efficiency but also significantly reduces communication delays and ground intervention requirements, which are critical for deep-space and distributed satellite missions.

These advancements are especially crucial for next-generation SmallSat and CubeSat missions, where limited power, mass, and bandwidth necessitate highly efficient data handling and onboard intelligence. By combining AI, adaptive control, and fault-tolerant design, the future CDH systems will ensure greater reliability, flexibility, and resilience enabling small spacecraft to perform complex, coordinated, and long-duration missions with minimal human supervision. The parameters for CDH design are listed in table 1.

Table 1: CDH Design Parameters

Parameter / Feature	COTS-Based CDH Systems	Radiation-Tolerant CDH Systems	Remarks / Typical Use
Processor / Logic	Commercial-grade MCU / SoC / FPGA	Rad-hard MCU / FPGA / ASIC	COTS suitable for LEO missions; rad-hard for deep-space or long-term operations.
Clock Speed / Throughput	100 MHz – 1 GHz	20 – 400 MHz (limited by radiation design)	COTS offers higher performance, rad-hard ensures stability.
Memory Type	Flash, SDRAM, DDR3, MRAM (with ECC)	Rad-hard SRAM, MRAM, or EDAC-protected DRAM	ECC essential for maintaining data integrity.
Data Bus Interfaces	I^2C, SPI, CAN, UART, Ethernet	SpaceWire, MIL-STD-1553, LVDS	SpaceWire preferred for high-speed, fault-tolerant applications.
Power Consumption	Low to moderate (1 – 5 W typical)	Moderate to high (5 – 15 W)	COTS optimized for efficiency; rad-hard trades power for reliability.
Software Environment	Open-source RTOS, Linux-based systems, modular middleware	Verified RTOS, space-qualified software	Open-source accelerates prototyping; verified OS ensures safety-critical assurance.
Fault Tolerance / FDIR	Software-based watchdogs, reboot recovery	Hardware redundancy (TMR), scrubbing, autonomous recovery	Hybrid approaches common in mid-range missions.
Radiation Mitigation Techniques	ECC, watchdogs, selective shielding	TMR, hardened logic cells, scrubbing, latch-up protection	Orbit and mission duration define the mitigation level.
Operational Lifetime	6 months – 3 years (LEO)	5 – 15 years (LEO → GEO / Deep space)	Dependent on orbit altitude and shielding design.
Cost & Availability	Low-cost, easily available	High-cost, limited vendors	COTS for academic/experimental; rad-hard for critical payloads.

5.1 Avionics and Onboard Computing Form Factors

The design of avionics and onboard computing units in small satellites is largely influenced by the need for standardization, compactness, and modularity. In modern spacecraft, form factors define the physical and electrical interfaces that enable integration across subsystems such as power, communication, and data handling. For CubeSats and small satellites, the choice of form factor must balance mechanical constraints, system expandability, and radiation tolerance.

Commonly adopted configurations employ stackable modular architectures, where each board performs a distinct function such as data handling, power regulation, or communication—and connects through standardized bus interfaces. This modular approach simplifies assembly, testing, and replacement during mission integration. Over time, several form factors like CompactPCI, PC/104, and newer NanoSat standards have evolved to meet the specific needs of low-Earth orbit missions. These configurations offer a good trade-off between available onboard volume and required computational performance.

Vendors now provide hybrid architectures that retain the mechanical layout of traditional CubeSat standards while incorporating newer interfaces with higher throughput and enhanced fault tolerance. Such systems also include mezzanine or daughter boards, allowing mission designers to add payload-specific or radiation-hardened processing units without redesigning the base architecture. This flexibility ensures compatibility with existing systems and reduces overall development time.

Recent developments in System-on-Module (SoM) and System-on-Chip (SoC) designs are further shaping the avionics form factor landscape. These compact boards integrate multiple processing cores, memory units, and interface controllers into a single footprint, significantly improving performance while minimizing power consumption. In many missions, these SoC-based boards replace conventional multi-board setups, resulting in improved thermal performance and reduced mass.

The growing trend in small satellite avionics emphasizes interchangeability, scalability, and heritage reuse. Manufacturers continue to enhance form factors to support higher data bandwidth, autonomous operation, and reliability in radiation-prone environments. This evolution ensures that even within the strict volume and power constraints of nanosatellites, avionics platforms can achieve robust performance comparable to traditional large-scale spacecraft systems.

5.2 Highly Integrated Onboard Computing Products

The rapid evolution of onboard computing architectures has transformed the design of Command and Data Handling (CDH) systems for small satellites. Modern spacecraft increasingly utilize integrated computing modules that merge processors, memory, and peripheral interfaces into a single, compact package. These systems reduce complexity, enhance reliability, and optimize power efficiency all of which are crucial for CubeSats and microsatellites operating in low-power environments.

Recent developments have introduced System-on-Chip (SoC) and Field-Programmable Gate Array (FPGA) based designs that allow flexible reconfiguration during the mission lifetime. These devices integrate digital signal processing, memory management, and control logic within one hardware platform, enabling both payload control and real-time data analysis. The adaptability of software-defined logic provides a balance between high performance and low resource utilization, particularly important for missions that require in-orbit software updates or multiple payload modes. The Integrated onboard computing system are illustrated in table 2.

Highly integrated onboard computers are evaluated not only for processing performance but also for radiation tolerance, thermal management, and interface compatibility. Designers often employ hybrid configurations that combine COTS (Commercial Off-The-Shelf) microcontrollers with radiation-mitigated FPGA modules, allowing a cost-effective yet dependable solution. While advanced rad-hard processors provide long mission lifetimes, COTS-based systems with mitigation techniques like ECC (Error Correcting Code), watchdog timers, and redundancy are preferred for cost-sensitive missions.

With the demand for higher computational power, vendors are producing modular computing platforms that support multi-core CPUs, AI accelerators, and high-throughput memory subsystems. These architectures simplify payload integration and enable combined control and data-handling functionalities within a single board. Furthermore, open-source development environments and standardized toolchains have encouraged mission developers to adopt these systems for faster prototyping and flight readiness.

As small satellite missions move toward greater autonomy and onboard intelligence, the convergence of CDH and payload computing functions continues to shape the next generation of satellite avionics. Compact, reconfigurable, and radiation-tolerant computing modules will remain the foundation for reliable, high-performance spacecraft operations.

Table 2: Integrated Onboard Computing Systems

Product Name	Processor / SoC / FPGA	Radiation Tolerance (TID / SEE)	Board Dimensions (cm)	Power Consumption (W)	Application Orbit / Use
OBC *(On-Board Computer)*	ARM Cortex-A53 Quad-Core SoC	Tested to 40 krad, SEE ≤ 40 MeV	10.2 × 9.8 × 2.0	3.5 (typical), 6 (peak)	LEO data handling, imaging payloads
SBC *(Single Board Computer)*	Xilinx Zynq UltraScale+ MPSoC	100 krad TID, SEL immune	9.5 × 9.0 × 1.8	4 – 8	LEO to MEO, high-speed telemetry
TCM (*Telemetry & Command Module*)	Dual-Core LEON3FT (SPARC V8)	Rad-hard, >300 krad TID	12.0 × 10.0 × 3.0	7.5	Deep-space and lunar orbiters
DPU *(Data Processing Unit)*	ARM Cortex-M7 with FPGA Co-processor	30 krad TID, ECC-protected memory	8.8 × 8.5 × 1.6	2.8	LEO / experimental CubeSats
ACU *(Antenna Control Unit)*	RISC-V SoC with AI accelerator	50 krad TID, SEE: <20 MeV	9.0 × 7.5 × 2.2	5.0	LEO, onboard image analysis
CCU *(Communication Control Unit)*	AMD Ryzen Embedded SoC	30 krad TID, shielded	15.0 × 12.0 × 3.0	10 – 25	GEO / high-data-rate payloads
PMC *(Power Management Controller/Card)*	Xilinx Kintex-7 FPGA with Dual-Core ARM	Tested at 60 krad TID	10.5 × 9.0 × 2.5	6.2	LEO / autonomous payload control
CDH	Dual ARM Cortex-A72 with GPU	20 krad TID	9.8 × 9.3 × 1.8	8 – 12	LEO / onboard AI-based compression
SBC-II	LEON5 SoC (SPARC)	150 krad TID, latch-up resistant	14.0 × 10.5 × 3.0	9.5	Interplanetary / deep-space probes

5.3 Radiation-Hardened Processors

Radiation-hardened processors are specifically engineered to operate reliably in the harsh radiation environments encountered in space missions. Unlike standard commercial processors, these devices are fabricated using specialized materials and design techniques that mitigate radiation-induced errors such as Single Event Upsets (SEUs), Latch-ups (SELs), and Total Ionizing Dose (TID) degradation.

In modern spacecraft, such processors serve as the central computing units in Command and Data Handling (CDH) systems, attitude control computers, and payload processing modules. The primary goal of radiation-hardening is to ensure continuous operation under high-energy particle exposure without compromising computational accuracy or control reliability.

Several families of processors are available with different architecture types such as ARM Cortex, LEON (SPARC), and PowerPC-based designs, each optimized for specific performance-to-radiation resilience trade-offs. These processors integrate Error Correction Codes (ECC), Triple Modular Redundancy (TMR), Latch-up protection, and radiation-hardened logic cells to prevent failures caused by high-energy particle strikes.

In addition to dedicated radiation-hardened (rad-hard) designs, many modern spacecraft systems now utilize radiation-tolerant processors, which are adapted from Commercial Off-The-Shelf (COTS) architectures and specially tested or screened to endure moderate levels of radiation. These processors provide a balanced trade-off between performance, cost, and resilience, making them highly suitable for Low Earth Orbit (LEO) and short-duration missions where radiation exposure is relatively limited. In contrast, fully rad-hard processors—built from the ground up with radiation-resistant materials and layouts—are deployed in deep-space and interplanetary missions, where long-term exposure to high-energy particles and cumulative dose effects demand maximum reliability and fault tolerance. Some of the examples illustrating the Radiation Hardened processors are shown in table 3.

Table 3: Examples of Radiation-Hardened Processors for Space Applications

Processor Model	Architecture	Cores	TID Rating (krad)	SEE Mitigation Features
RHX1200	ARM Cortex-A9	2	≥100 krad (Si)	Hardened logic, ECC memory, SEL protection
GR7800	LEON4 SPARC V8	4	≥75 krad (Si)	TMR on flip-flops, fault-tolerant cache
RHPPC750	PowerPC 750FX	1	≥150 krad (Si)	EDAC memory, latch-up protection circuits
VOR2100	ARM Cortex-M7	1	≥60 krad (Si)	ECC on registers, watchdog and scrub control
BAE S9000	Custom SPARC V8	4	≥100 krad (Si)	Full TMR pipeline, SEU-immune logic
TXP1020	RISC-V 64-bit	2	≥80 krad (Si)	Radiation-tolerant cells, memory scrubbing
LS2040R	Power Architecture e6500	4	≥100 krad (Si)	Redundant voltage rails, SEE hardening
NanoLEON2	LEON2 SPARC	1	≥50 krad (Si)	Error detection on buses, low-power hardened core

5.4 Memory, Electronic Function Blocks, and Components

Memory and electronic function blocks form the backbone of onboard computing and data handling systems in modern spacecraft. The choice of memory technology directly influences system speed, data integrity, and radiation tolerance — all critical factors in space applications. Depending on the mission profile, memory subsystems are designed to balance performance, non-volatility, endurance, and radiation robustness.

For Command and Data Handling (CDH) units, both volatile and non-volatile memory technologies are used in combination. Volatile memories such as SRAM and DRAM are employed for high-speed data buffering and real-time processing, whereas non-volatile types such as Flash, MRAM, and FRAM provide long-term data storage and program retention. These components must withstand temperature extremes, vacuum conditions, and ionizing radiation without performance degradation.

In small spacecraft and CubeSat systems, MRAM (Magneto resistive RAM) and FRAM (Ferroelectric RAM) have gained preference due to their low power consumption and fast write speeds while maintaining non-volatility. Emerging technologies like ReRAM (Resistive RAM) and PCM (Phase Change Memory) are also being evaluated for next-generation missions because of their high density and endurance under radiation exposure.

Apart from memory, electronic function blocks such as logic controllers, power regulators, and communication interfaces are often integrated within a System-on-Chip (SoC) architecture to reduce footprint and improve reliability. These blocks are typically radiation-screened or redundancy-protected to ensure continued operation during solar events or high-energy particle interactions.

The selection of suitable memory technology depends on mission duration, data rate, environmental conditions, and redundancy strategy. The comparison of these memory technologies are listed in the table 4 and additional technologies in table 5.

Table 4: Comparison of Memory Technologies for Spacecraft Applications

Feature	SRAM	DRAM	Flash	MRAM	FRAM	ReRAM / PCM
Non-volatile	No	No	Yes	Yes	Yes	Yes
Operating Voltage (V)	2.5 – 5.0	1.2 – 3.3	3.0 – 3.6	3.0 – 3.3	3.3	3.3
Organization (bits/die)	256k × 8 to 64M × 8	1Gb × 8	8Gb × 8	64Mb × 8	16Mb × 8	32Mb × 8
Data Retention @70°C	N/A	N/A	10 years	10 years	10 years	10–15 years
Endurance (cycles)	Unlimited	Unlimited	10^5	10^7	10^{13}	10^8
Access Time	10–20 ns	20–25 ns	50–100 ns	30–50 ns	50–70 ns	60–80 ns
Radiation Tolerance (TID)	50 krad – 1 Mrad	20–50 krad	30–100 krad	Up to 1 Mrad	1 Mrad	500 krad
Temperature Range (°C)	–55 to +125	–40 to +85	–40 to +85	–55 to +125	–55 to +125	–55 to +125
Power Consumption (typical)	400–800 mW	300–500 mW	30–100 mW	500–900 mW	250–400 mW	350–600 mW
Package Capacity	4MB – 64MB	128MB – 2GB	128MB – 8GB	2MB – 4GB	1MB – 16MB	64MB – 1GB
Typical Application	Cache, buffers	Real-time data	Firmware storage	Mission-critical data	Telemetry logging	Future high-density storage

Table 5: Comparison of Memory Technologies for Spacecraft Applications

Component	Primary Function	Key Parameters	Radiation Tolerance (TID)	Typical Power (mW)	Precision / Speed	Common Space Application
FPGA	Reconfigurable digital logic processing	Logic cells: 10k–1M; Configurable I/O; SRAM or Flash-based	100 krad – 1 Mrad	1000–5000	Up to 500 MHz	CDH processing, real-time control, payload interfacing
NAND Flash	Non-volatile data storage	Capacity: 1–128 GB; ECC protection	50 – 300 krad	100–400	Access time 50–100 ns	Firmware, telemetry, image and payload data storage
Load Switch	Power routing and protection	Voltage: 3–28 V; Current: 1–5 A; Low Rds (on)	100 – 300 krad	10–50	Switching delay <100 ns	Subsystem power sequencing and isolation
ADC (Analog-to-Digital Converter)	Converts analog input to digital output	Resolution: 12–24 bit; Sampling rate: up to 5 MSPS	50 – 100 krad	50–200	±0.1% accuracy	Sensor interfacing, telemetry, health monitoring
Temperature Sensor	Measures thermal conditions	Range: –55°C to +150°C; Accuracy ±0.5°C	50 – 150 krad	1–10	Response time <200 ms	Thermal monitoring, FPGA/processor temperature control
Oscillator	Provides stable clock frequency	Frequency: 1–100 MHz; Stability ±25 ppm	100 – 300 krad	20–150	Jitter <1 ps; drift <0.01%	Timing reference for RF systems, CDH synchronization

5.5 Bus Electrical Interfaces

In spacecraft avionics, bus electrical interfaces serve as the communication backbone that links subsystems, sensors, and payload units to the Command and Data Handling (CDH) system. These interfaces ensure seamless data exchange and synchronization between onboard computing elements and peripheral hardware. The design of bus architectures in small satellites focuses on achieving standardization, reliability, and scalability while operating within strict constraints of power, size, and environmental endurance.

Modern CDH subsystems typically incorporate multiple bus standards to accommodate the differing data rates and electrical requirements of various subsystems. Low-speed buses are used for telemetry, command, and sensor communication, whereas high-speed serial links are employed for data-intensive payloads, such as imaging or radar systems.

- **Serial Communication Interfaces (SCI):** RS-232, RS-422, and RS-485 enable command and telemetry exchange between controllers and ground stations.
- **Synchronous Interfaces:** I^2C, SPI, and CAN provide deterministic, time-synchronized communication among onboard modules.
- **Field and Industrial Buses:** CAN Bus, SpaceWire, and MIL-STD-1553 ensure robust, fault-tolerant communication for mission-critical systems.
- **Network Interfaces:** Ethernet links enable high-speed onboard data transfer, ground communication, and diagnostics.
- **Analog and Digital I/O:** ADCs and DACs handle real-time sensor data acquisition and actuator control.
- **Timing and Control Interfaces:** PLLs, timers, and clock buses maintain precise synchronization across system modules.
- **Debugging and Programming Interfaces:** JTAG, ISP, and SWD support configuration, testing, and firmware updates.
- **High-Speed Serial Links:** SerDes, LVDS, and XAUI provide gigabit-rate data transfer for large-volume payload communication.

As mission complexity increases, there is a growing emphasis on hybrid bus architectures, where multiple standards coexist within a spacecraft to optimize performance, redundancy, and flexibility.

5.6 Radiation Mitigation and Tolerance Schemes

Space electronics are continuously exposed to ionizing and non-ionizing radiation that can alter circuit characteristics, disrupt logical operations, and reduce mission reliability. Effective radiation mitigation ensures that onboard computing and control systems remain operational throughout the mission, even under extreme particle flux and high-energy impacts.

Mission Dependability in Harsh Environments

In orbits such as Medium Earth Orbit (MEO), Geostationary Orbit (GEO), and deep-space trajectories, exposure to charged particles from solar flares and cosmic rays is significantly higher. These particles can cause degradation of electronic parameters over time and trigger single-event failures. Therefore, spacecraft electronics are designed not only to function efficiently but also to tolerate degradation gracefully without performance collapse.

Processor and Component Design Approaches

- Radiation-Tolerant Devices: Built using process-level hardening such as silicon-on-insulator (SOI) or enclosed layout transistors to resist total ionizing dose damage.
- COTS with Protective Architecture: Low-cost commercial components are selectively used with current limiters, voltage guards, and redundancy to provide acceptable reliability for short-term or LEO missions.
- Redundant Processing Schemes: Multiple processors or logic paths are used to enable majority-voting or cross-checking when a single path experiences an error.

Types of Radiation Effects

- Ionization Effects: Cumulative charge buildup in oxide regions leading to parametric drift and slower switching speed.
- Displacement Effects: Lattice disturbances from particle collisions, particularly affecting analog and optical detectors.

- Single-Event Effects (SEE): Momentary or permanent changes in logic caused by individual high-energy particles, including:
    - Upsets: Transient bit flips in digital logic or memory.
    - Latch-ups: Formation of parasitic current paths that can short the device.
    - Burnouts: Localized damage in high-power devices due to overcurrent heating.

Design Evaluation and Testing

Before deployment, all critical components undergo accelerated radiation testing using proton and heavy-ion beams to validate their survivability. Simulation tools model dose accumulation and predict degradation behaviour. Fault-injection experiments help verify the robustness of software-level fault recovery and system reset strategies.

6. PCB Quality and Screening Standards

Printed Circuit Boards (PCBs) used in spacecraft electronics must meet stringent quality and reliability standards far beyond those applied to commercial or industrial applications. Since PCBs form the foundation for interconnection and signal integrity in avionics and payload systems, their fabrication and inspection are performed under tight process control, certified material use, and extensive environmental testing to guarantee mission life.

Quality Control and Testing Philosophy

Space-grade PCBs are subjected to rigorous acceptance and qualification testing to ensure they can withstand mechanical stress, thermal cycling, and vacuum exposure without delamination or trace failure. Each production batch undergoes inspection against recognized space standards such as IPC-6012ES or equivalent, ensuring consistency in plating, trace geometry, and dielectric integrity. These checks confirm that the board maintains both electrical reliability and mechanical robustness throughout mission operations.

Key Qualification and Screening Tests

- Visual and Dimensional Evaluation: Each layer is examined for surface uniformity, conductor width, solder mask registration, and overall dimensional tolerance. Automated optical inspection (AOI) ensures that trace spacing and via alignment conform to flight-quality requirements.
- Thermal Stress Evaluation: Boards are cycled through high and low temperature extremes to detect micro-cracking, delamination, or via separation that could occur in vacuum or during launch vibrations.
- Cross-Section and Structural Integrity Tests: Random samples are micro-sectioned to assess internal layer bonding, plating adhesion, and copper voids within vias.
- Electrical Continuity and Isolation Checks: Verification of signal integrity and insulation resistance under elevated temperature and humidity conditions.

Material and Fabrication Requirements

- Space-qualified laminates such as polyimide or FR-4 with low-outgassing prepregs are used to maintain dielectric stability and minimize moisture absorption.

- Controlled etch-back and plating thickness ensure consistent trace geometry and prevent tin whisker formation.
- Surface finishes like ENIG (Electroless Nickel Immersion Gold) or OSP (Organic Solderability Preservative) are chosen for corrosion resistance and solder reliability.
- Strict control of solder mask curing, via fill processes, and multilayer lamination is maintained to avoid trapped voids or conductive residues.

Manufacturer and Certification Obligations

PCB vendors supplying flight hardware must comply with strict space-grade documentation and traceability requirements to ensure reliability and quality. Each PCB panel must be delivered with a certificate of conformance (CoC) that includes material batch numbers, process history, and inspection results. Vendors are also required to perform periodic lot qualification tests, which typically involve environmental stress screening (ESS) and destructive physical analysis (DPA) on representative samples. These rigorous evaluations verify material integrity, manufacturing stability, and resistance to environmental factors. Such practices maintain process consistency, guarantee aerospace reliability compliance, and ensure that every PCB meets the stringent standards required for space missions.

7. Reliability of Electronic Components

7.1 Overview

Reliability in electronic systems is a key concern for space missions, where repair or replacement is not possible once deployed. To ensure sustained performance, components are operated under conservative conditions, a practice known as derating. Derating involves using components below their rated electrical and thermal limits to minimize stress, improve stability, and enhance longevity. This approach significantly reduces the likelihood of premature failure and increases system resilience under extreme environmental conditions such as temperature variations, vibration, and radiation exposure.

Key Benefits of Derating

- Enhances operational lifespan and system availability by reducing part degradation.
- Improves Mean Time Between Failures (MTBF) and overall system reliability.
- Decreases the probability of thermal or electrical overstress.
- Provides additional safety margins to account for component aging and parameter drift.

7.2 Requirements for Derating

- Voltage Derating:
  Components such as capacitors and semiconductors should typically operate between 40–70% of their rated voltage to prevent dielectric breakdown and improve insulation stability.
- Current Derating:
  For resistors and transistors, operating at 50–60% of maximum rated current helps minimize self-heating and extends conduction life.
- Thermal Derating:
  The junction temperature of active components should be maintained well below the maximum threshold, typically by 15–25°C, to prevent thermal runaway and mechanical fatigue.

- Power Derating:
  Devices must operate at 50–80% of their rated power dissipation to ensure long-term reliability and prevent localized overheating.

7.3 Methodology and Approach

- **Identify Sensitive Components:**
  Recognize components most affected by stress factors, such as MOSFETs, ICs, capacitors, and connectors.
- **Determine Rated Limits:**
  Refer to manufacturer datasheets for maximum ratings (voltage, current, temperature, and power).
- **Select Derating Factors:**
  Based on mission criticality, apply conservative derating margins (e.g., 60% voltage, 70% current, 80% temperature).
- **Perform Stress Analysis:**
  Evaluate worst-case scenarios and compare actual stresses with derated limits using analytical models or simulation.
- **Validation through Testing:**
  Conduct environmental tests like thermal cycling, power cycling, and radiation exposure to confirm operational endurance.
- **Establish Safety Margins:**
  Document the calculated safety margins and maintain traceability for all critical components used in flight hardware.

8. Reliability Analysis and Standards

Reliability analysis forms the backbone of spacecraft electronics design, ensuring that every subsystem continues to perform its intended function despite environmental stress, material aging, or manufacturing variation. Two key analytical tools used for this purpose are Failure Mode and Effects Analysis (FMEA) and Worst-Case Circuit Analysis (WCCA). These approaches help engineers identify weak links, establish safety margins, and maintain mission assurance throughout the spacecraft's operational life.

8.1 Failure Mode and Effects Analysis (FMEA)

Objective

FMEA provides a structured method for identifying potential points of failure in a system before they occur. It evaluates the impact of each failure on mission objectives and helps prioritize corrective actions based on risk level.

This process not only improves design robustness but also enhances maintainability and fault tolerance within electronic subsystems such as power regulators, data buses, and processing units.

Procedure

- System Definition: Clearly establish the boundaries, interfaces, and functions of the subsystem under study.
- Failure Identification: List all possible failure mechanisms associated with electrical, thermal, or mechanical stress.
- Cause–Effect Assessment: For each failure mode, determine the root cause, potential consequence, and detectability.
- Risk Evaluation: Assign weighted ratings for Severity, Occurrence, and Detection to compute a Risk Priority Number (RPN) for ranking critical issues.
- Mitigation and Re-evaluation: Apply preventive measures such as circuit redundancy, protective isolation, or derating, followed by reassessment to confirm reduced risk.

MIL-STD-1629A, ensuring uniformity and traceability in reliability assessments.

8.2 Worst-Case Circuit Analysis (WCCA)

Objective

WCCA aims to verify that electronic circuits will perform within specified limits under the most extreme combination of manufacturing, environmental, and aging variations. It ensures that circuit performance is not compromised even under the worst realistic conditions of voltage, temperature, and component drift.

Methodology

- Define Operating Boundaries: Establish the expected mission environment, including temperature ranges and end-of-life degradation.
- Select Target Circuits: Focus on mission-critical electronics—such as power converters, ADCs, oscillators, and timing logic—that require precise output stability.
- Parameter Collection: Gather data for tolerances, drift coefficients, process variations, and environmental stress factors.
- Mathematical Modeling: Apply deterministic analysis (for linear stacking of extremes) or statistical methods such as Root-Sum-Square (RSS) and Monte Carlo simulation for probabilistic insight.
- Compute Performance Limits: Determine minimum and maximum circuit responses—voltage levels, frequency shifts, timing delays, and gain variations—under combined worst-case conditions.
- Margin Evaluation: Compare results with design requirements and adjust component ratings or layout to restore compliance.
- Documentation and Validation: Record assumptions, boundary conditions, and analytical results as part of the qualification dataset.

MIL-STD-454 provides consistency in applying WCCA techniques across electrical and electronic assemblies for space-qualified hardware.

9. Case Study

As a demonstration, a derating analysis has been performed on one of the functional modules within the Integrated Avionics Package (IAP). The IAP serves as a unified system that combines the capabilities of the On-board Computer, Data Handling Unit, Storage Module, Satellite Navigation Subsystem, and Telemetry, Tracking, and Command (TMTC) transceiver for signal modulation and demodulation. The results obtained are shown in table 6.

Table 6: Derating parameters & Derating factors

Components	Parameters	Derated Factor
FPGA NAND FLASH LOAD SWITCH ADC TEMPERATURE SENSOR OSCILLATOR	Output current	80%
	Supply voltage	90%
	Junction temperature	110˚C
	Power dissipation	80%
	Input voltage	As per the Manufacturer recommendation

10. REFERENCES

[1] M. Wirthlin, "High-Reliability FPGA-Based Systems: Space, High-Energy Physics, and Beyond," *Proceedings of the IEEE*, vol. 103, no. 3, pp. 379–389, Mar. 2015.

[2] Haoming Du, "Radio Frequency System-on-Chip Design for Digital Receiver," *IEEE Xplore*, pp. 353-356, Nov. 2018.

[3] Francesco Restuccia, "Cut and Forward: Safe and Secure Communication for System on Chip" *IEEE Transaction,* vol. 41, no.11, pp. 4052-4063, Nov. 2022

[4] F. Restuccia and A. Biondi, "Time-predictable acceleration of deep neural networks on FPGA SoC platforms," *Proc. IEEE Real-Time Syst. Symp. (RTSS*), 2021, pp. 441–454.

[5] NASA, "2020 Technology Taxonomy." [Online]. Available:https://www.nasa.gov/sites/default/files/atoms/files/2020_nasa_technology_taxonomy.pdf